CMS Alignment and Calibration Workflows: Lessons Learned and Future Plans

Salvatore Di Guida (Università degli Studi Guglielmo Marconi, INFN Sezione di Napoli, CERN)
on behalf of the CMS collaboration
salvatore.di.guida@cern.ch

Abstract: We review the online and offline workflows designed to align and calibrate the CMS detector. Starting from the gained experience during the first LHC run, we discuss the expected developments for Run II. In particular, we describe the envisioned different stages, from the alignment using cosmic rays data to the detector alignment and calibration using the first proton-proton collisions data (O(100 pb-1)) and a larger dataset (O(1 fb-1)) to reach the target precision. The automation of the workflow and the integration in the online and offline activity (dedicated triggers and datasets, data skims, workflows to compute the calibration and alignment constants) are discussed.

CMS Condition Database Model

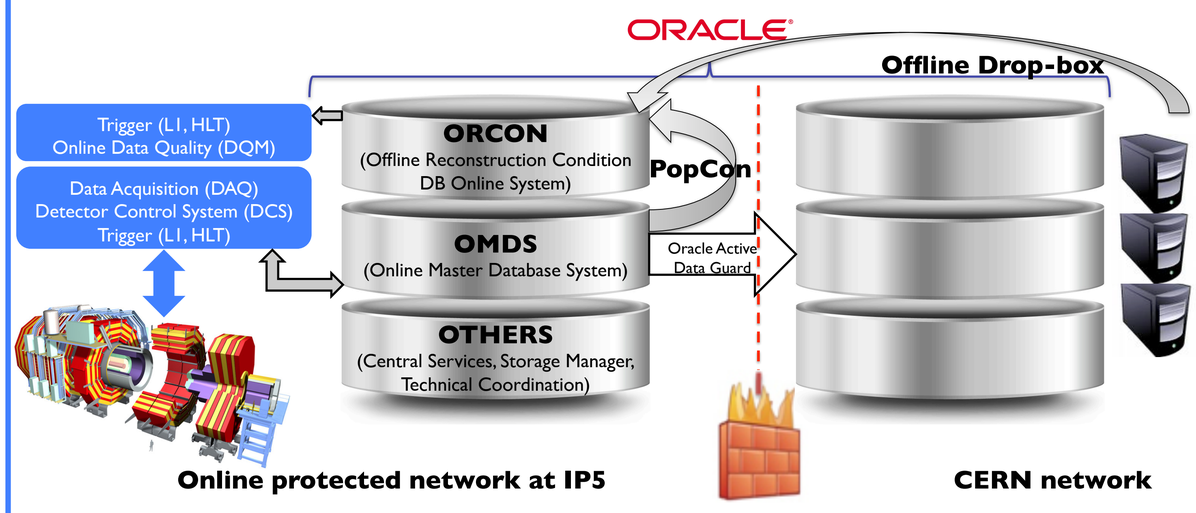

A proper reconstruction of collision events makes use of "secondary data" (the so-called condition data), such as alignment and calibration constants, that are stored in ORACLE Databases and are accessed during the execution of the reconstruction applications. The CMS Condition Database system relies on one ORACLE 11gR2 Real Application Cluster and its Active Standby copy, housing two Database services:

•OMDS allows to handle the configuration and condition data produced online by the sub-detectors in relational tables;

•ORCON serves a subset of condition data needed by HLT, DQM and offline reconstruction. Data are written and retrieved as C++ objects.

•The offline reconstruction algorithms retrieve data as C++ objects from the active standby copy of the online RAC using FroNTier middleware based on Tomcat servlet and squid caching system.

The offline dropbox allows the automatic exportation of alignment and calibration data into the offline condition database accounts, synchronizing them to the HLT or Tier0 data processing.

The Calibration Challenge

An efficient reconstruction of the particles, and a correct measurement of the physics observables rely on the alignment and the calibrations of each sub-detector, as well as between each other. The calibration workflows are intrinsically iterative:

- They cope with a millions of electronics channels and module;
- They can depend on different procedures;
- They produce calibrations with improved precision when running on samples with larger statistics.

The alignment and calibration workflows must provide reliable calibrations to ensure the best physics performance.

Preparing Run II Data Taking

Consolidate the alignment and calibration infrastructure:

- Automation of workflows, so the Prompt Reconstruction can produce data for analysis already 48h after data taking;
- Reliability of the results insured by the Data Quality Monitoring.

Alignment and Calibration Workflows

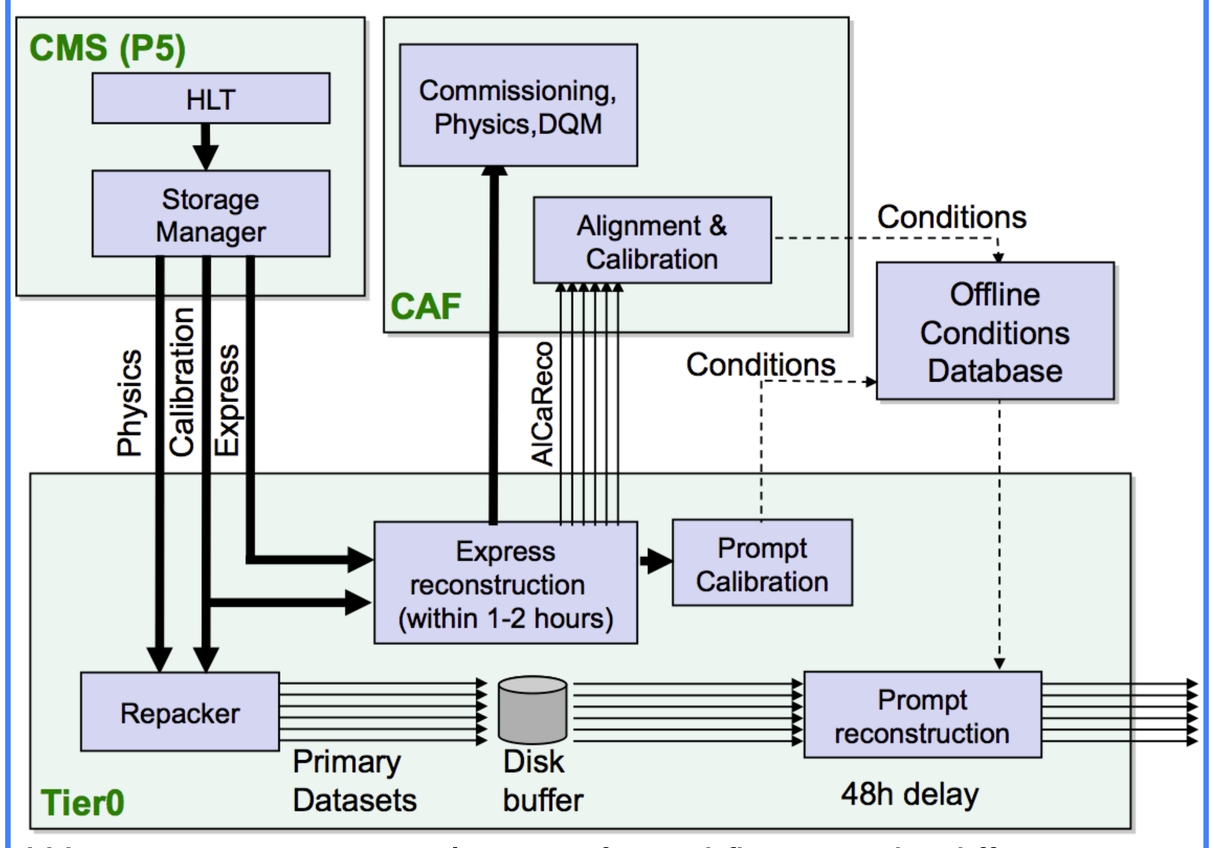

We envisage various classes of workflows with different time latencies according to the needs of the event data processing:

- **Online**: a set of applications produces calibrations to be consumed by HLT and express stream reconstruction with a short latency (1 minute);
- **Prompt Calibration Loop**: the express reconstruction yields pre-defined data streams which are used to compute calibrations consumed by Prompt Reconstruction within 48 hours;
- **Offline**: at full reconstruction level, dedicated calibration data tiers are produced. They have a reduced event content and a dedicated event selection in order to optimize the computing resources usage, like disk and CPU, and maximize the statistics. These datasets are then used to produce a fine-grained alignment of the various parts of the detector, keeping into account the interdependencies between them. This new set of calibrations, with ultimate accuracy, is then consumed in data reprocessing campaigns.

Alignment of Pixel Large Structures

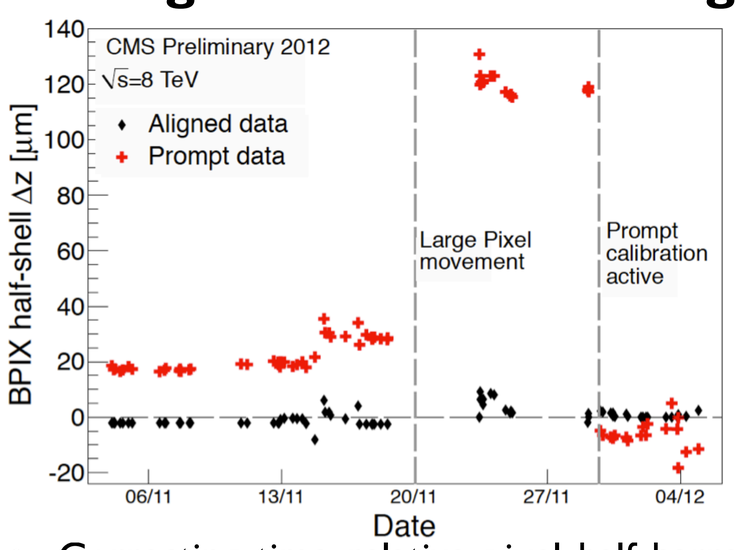

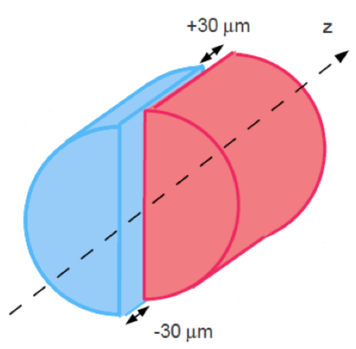

- Correcting time relative pixel half barrels displacements along z as a function of time.
- Monitoring longitudinal separation, mechanically allowed, on a run basis (>20k events) using unbiased track-to-vertex residuals.