LHC Harmonic System

On behalf of WP4

HL-TC, Jun 18, 2015

- **Recap:** HH-800 MHz, LH-200 MHz
- Space Requirements in P4

HL-LHC Harmonic Systems

KEK Meeting: J. Mueller et al.

Measured @4 TeV (12 MV, 1eVs): ,

Loss of landau damping, Nth = 1x10^{11}

Coupled bunch instability not observed *so far*

$$N_{th} \propto \frac{\epsilon^{5/2} h^{7/4}}{\Im Z / n E^{5/4} V^{1/4}}$$

Impedance to further increase in the HL-LHC era:

With 16 MV, 2.5 eV = 1ns: Nth ~3.3 x 10^{11}

Unstable for 50ns option unless emittance increased

Second harmonic helps to stabilize the beam

HL-LHC Longitudinal RF

Option I:

Use existing 400 MHz RF system (+ required changes)

Add a 2nd harmonic (stability & bunch manipulation)

Option II:

Use compact 200 MHz SC system (as main RF)

With 200 MHz, require 50% large emittance even for 25ns

2nd harmonic is a must both for stability & bunch length (1.3ns)

Use existing 400 MHz (1-module) as 2nd harmonic

IR4 & RF

The 400 MHz ACS cavities are ~370 mm in radius

- 420 mm dogleg separates B1 & B2
- The adjacent beam pipe in the cryostat vacuum

Considerations for harmonic systems

Dispersion function is minimum (constraint from RF)

Proximity to main RF system (strict RF phase diff)

Proximity to the power source to minimize loop delay (RF power)

-RF routing and power implantation already integrated for ACN

Equipment nearby (for example e-lens) should not impact the performance the main 400 MHz cavities

Schematic of IR4 Layout

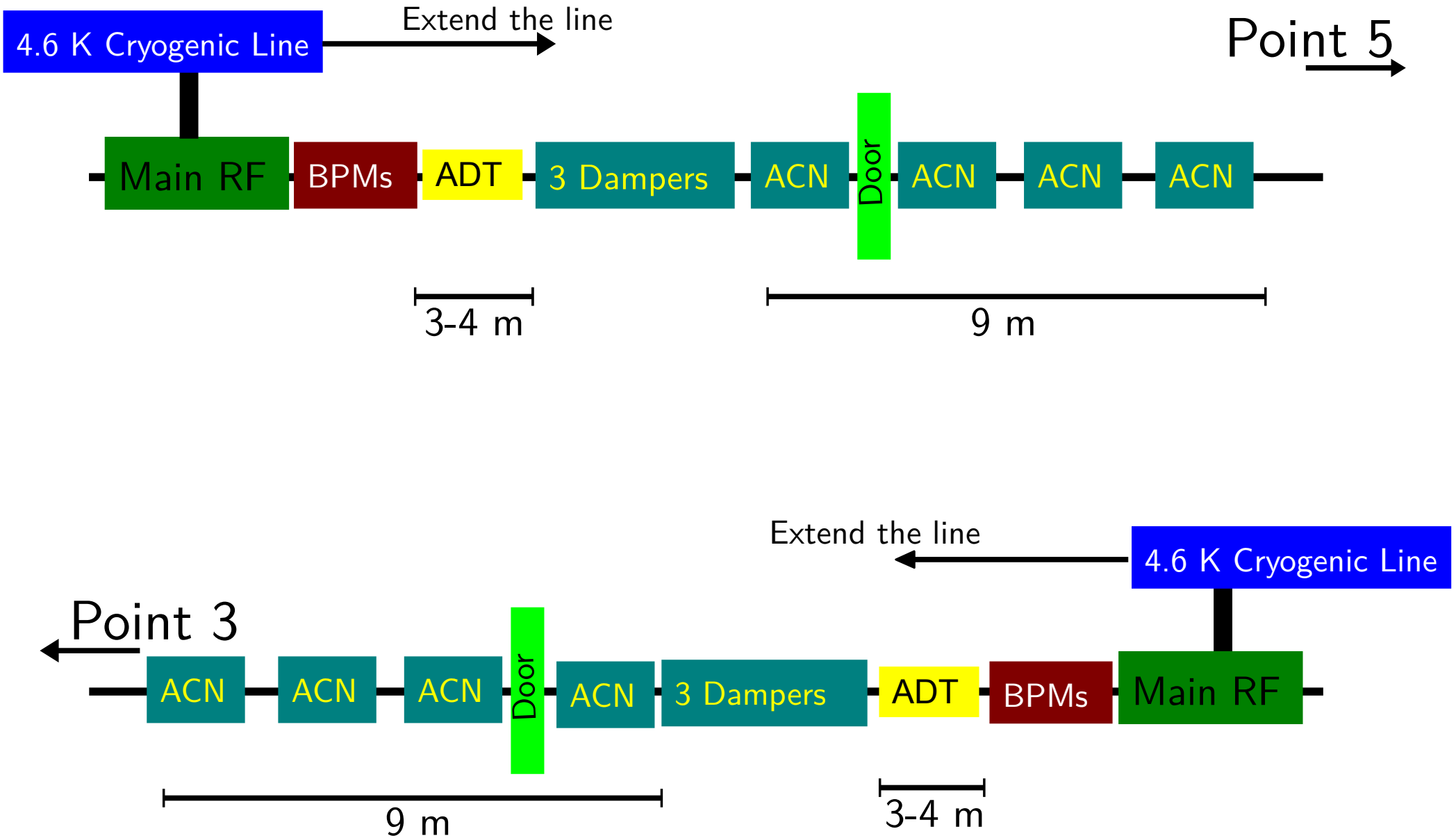

LHC-ACS, 400MHz

8 SRF cavities/beam (total 16)

Frequency: 400 MHz

Voltage: 2 MV/cavity

Tuning: 240 kHz/mm, $\tau \sim$ secs

4-HOM couplers (1 kW-max)

CW high power variable coupler

$1\text{x}10^4 < Q_{ext} < 1\text{x}10^5$

Klystron driven (up to 300 kW)

400 MHz(Nb-Cu)

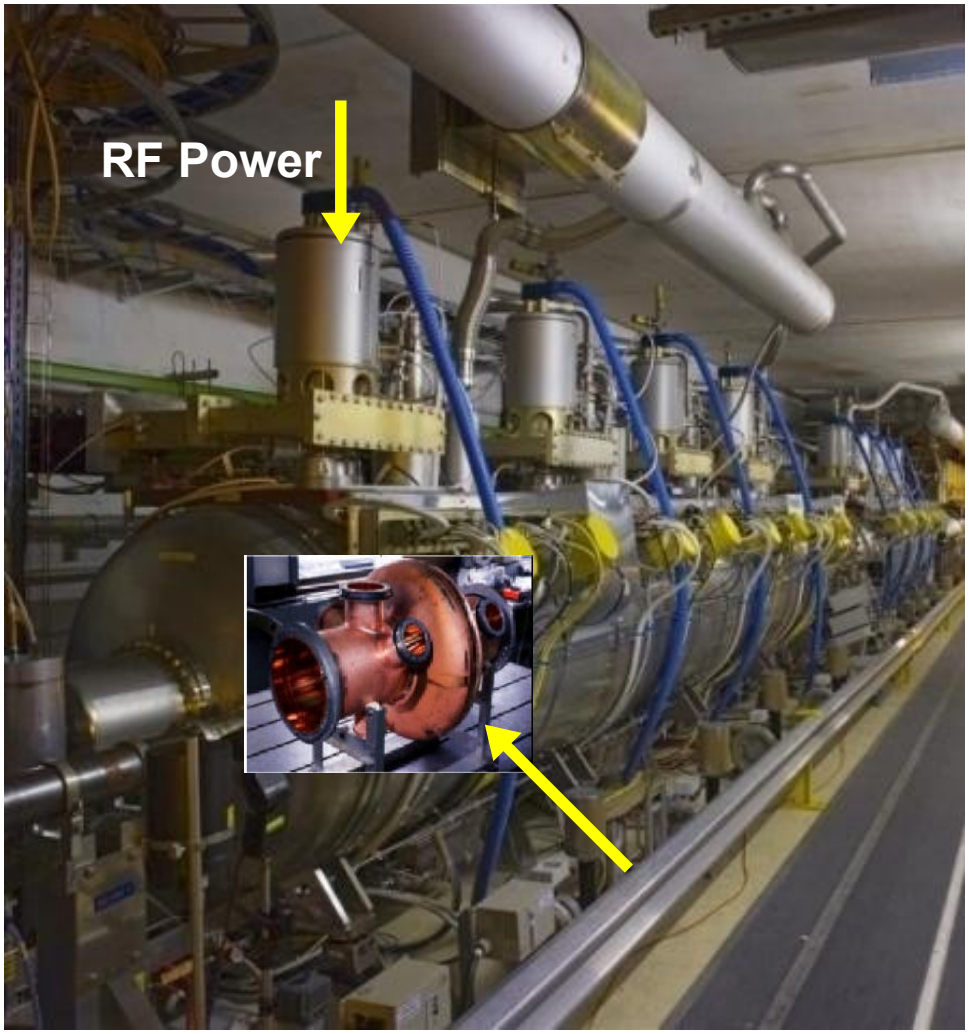

RF Power Chain

Courtesy (O. Brunner, E. Montesinos)

58 kV, 8.8A

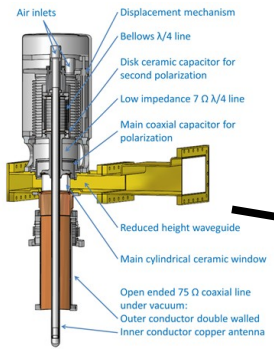

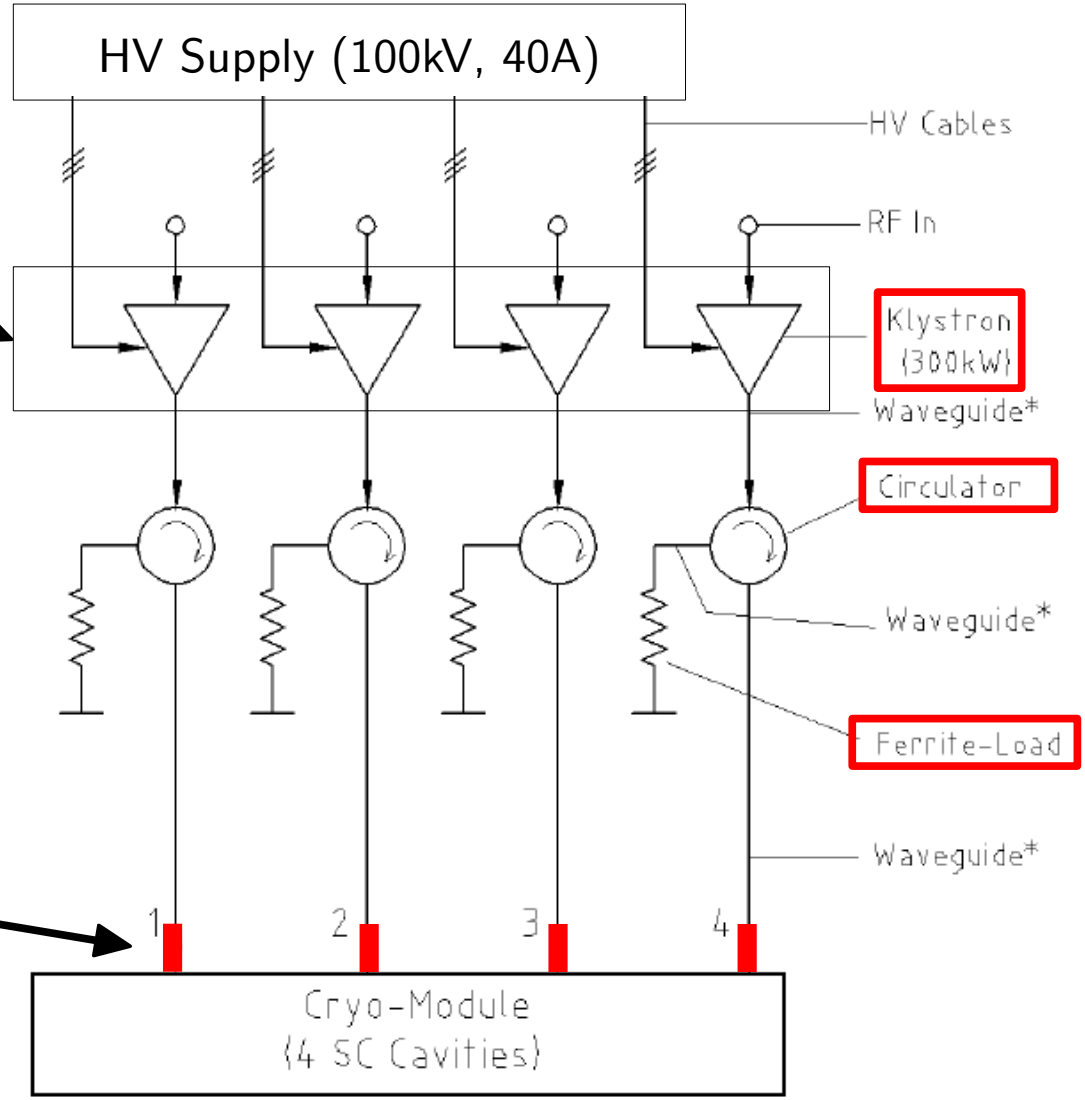

Present system: klystron, power coupler, circulator, ferrite load

$\rightarrow$ all limited $\leq$ 300 kW

Flattop, HL-LHC

HL-LHC beams exceed power capability already at 12 MV total.

To operate ½-detuning mode, reduce V/cavity to 1 MV

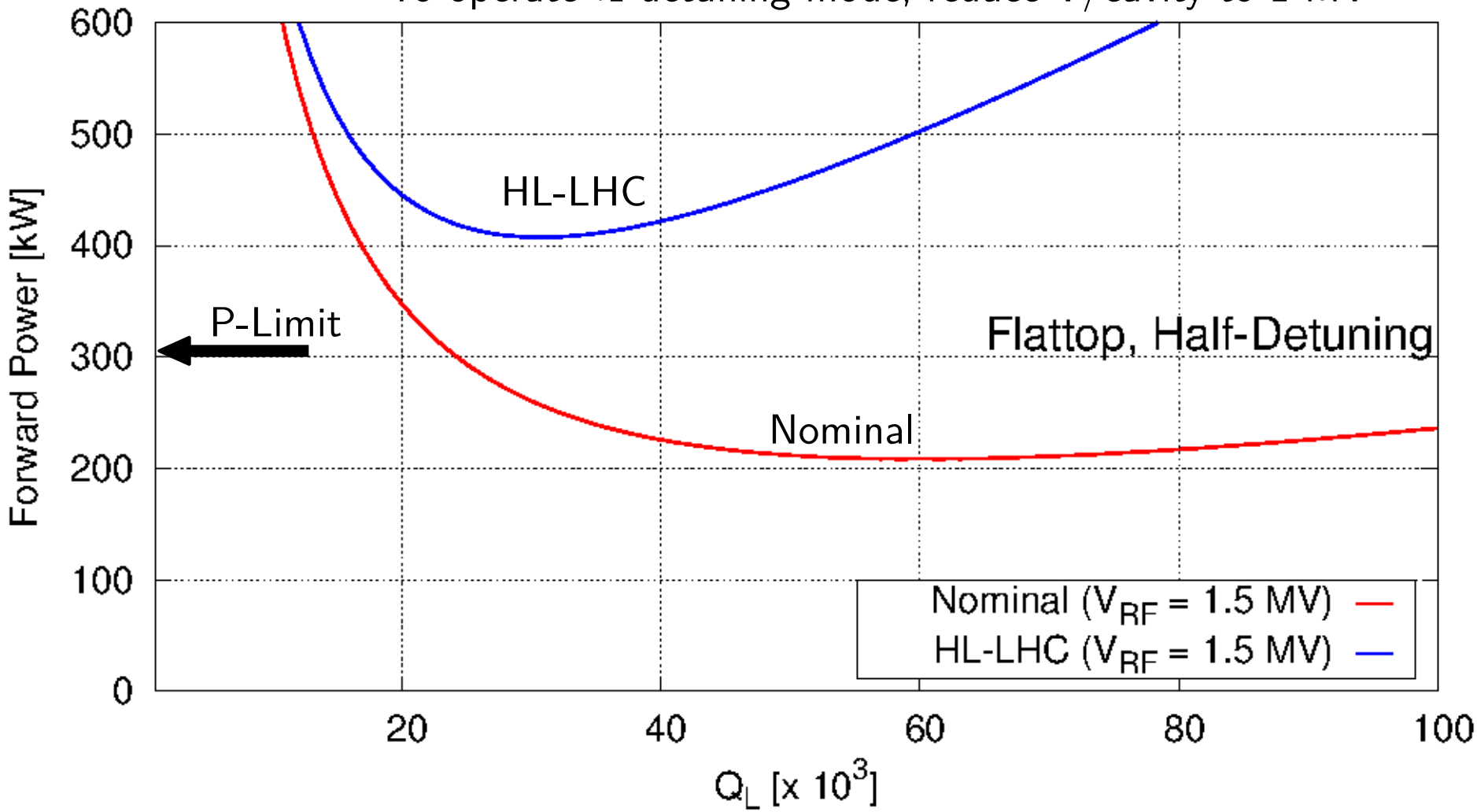

Double the RF system for 16 MV

Solution: "Full-Detuning"

Tested in MD with 50ns
P. Baudrenghien et al.

Compensate the accumulated phase shift of 1-turn by "fully" detuning the cavity: Δf = -10.5 kHz

Consequence: Beam gaps modulate the RF phase
Allow bunches to slide w.r.t, each other → minimize RF power

HL-LHC (I_b=1.1A, V=12MV): <u>P ≤ 180 kW</u> for Q_L=35k (scales $1/Q_L$)

Inter-bunch displacement, 25mm

Symmetric B1/B2 filling →
only modulation of time of collision

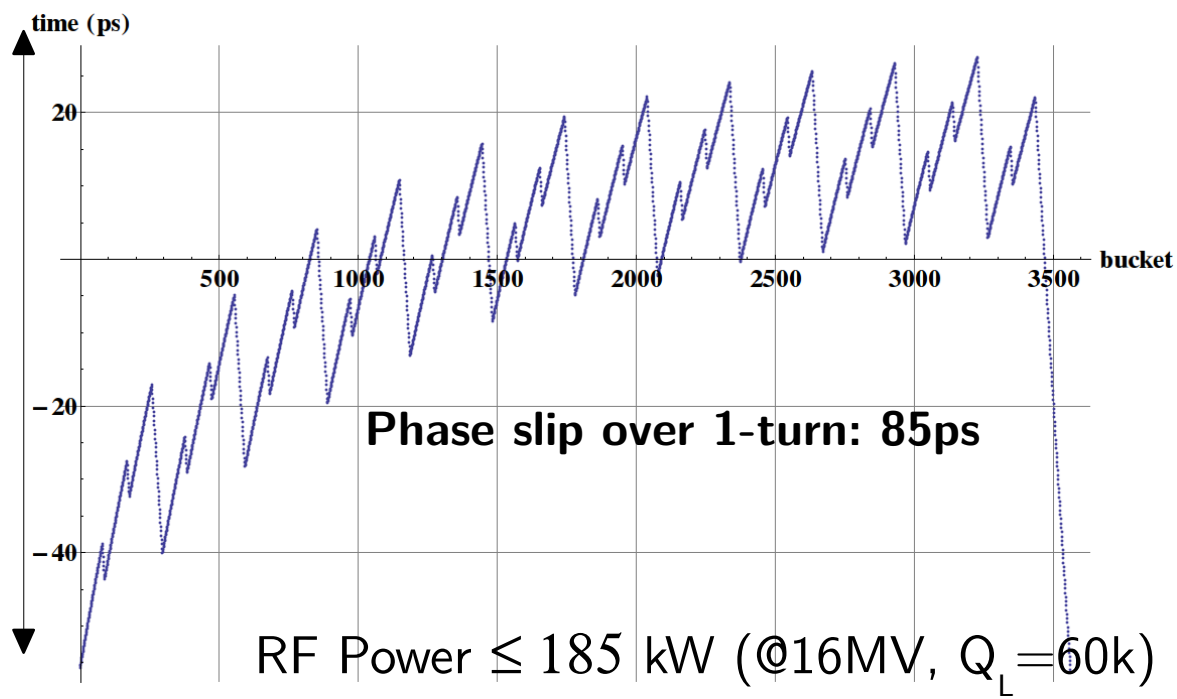

RF Power ≤ 185 kW (@16MV, Q_L=60k)

2nd Harmonic Cavity

Motivation

Manipulate bunch profile (IBS, heating, lumi etc..)

f_s spread to increase stability (if needed)

Requirement:

V_2/V_1 = ½ (8 MV)

Fixed phase w.r.t to 400 MHz

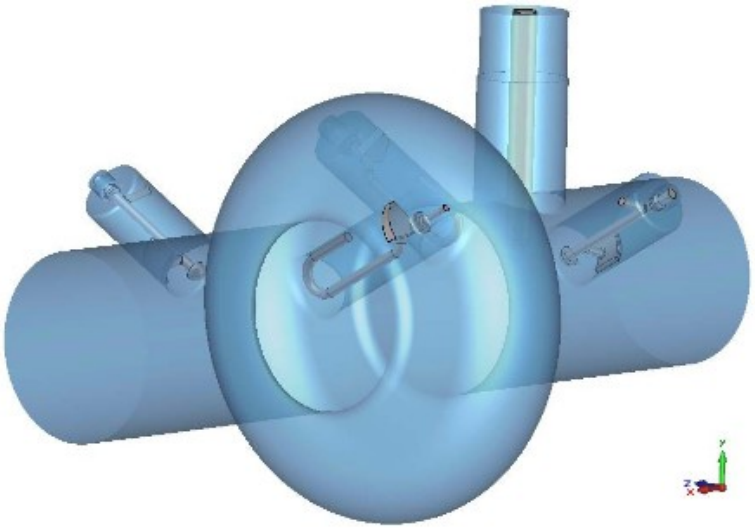

Cavity: L. Ficcadenti, T. Roggen et al.

Cavity design scaled from 400MHz

- R/Q=45Ω, Ep,Bp = 14.6MV/m, 28mT
- 4 HOM couplers (Narrowband/broadband)

800 MHz, Which Mode ?

BS-mode (fixed coupler possible)

- Baseline, full phase-swing $\rightarrow$ 2-3 cavities sufficient
- Could restore ½ detuning (400MHz @8 MV + 800MHz @4MV)
- With ½ detuning: P(t)~230 kW (@ 1MV) $\rightarrow$ **4 cavities**

Bunch lengthening mode (variable coupler)

- Stability highly sensitive w.r.t to 400 MHz phase ($< \pm 1^0$)
- Asymmetric bunch profile $\rightarrow$ luminosity
- V=8MV, Power ~300 kW/cav $\rightarrow$ **10 cavities** (9-10m long)

Proposal is to use for bunch shortening mode + flattening with noise

Technical design to be launched to produce a cavity prototype & test

Service Gallery in P4 for RF Systems

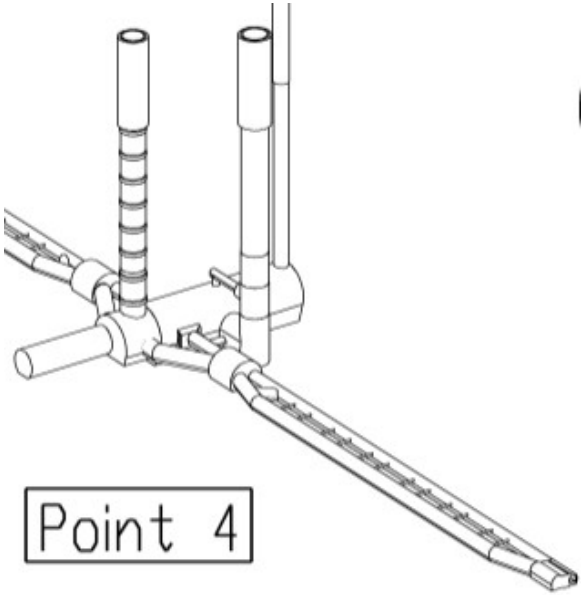

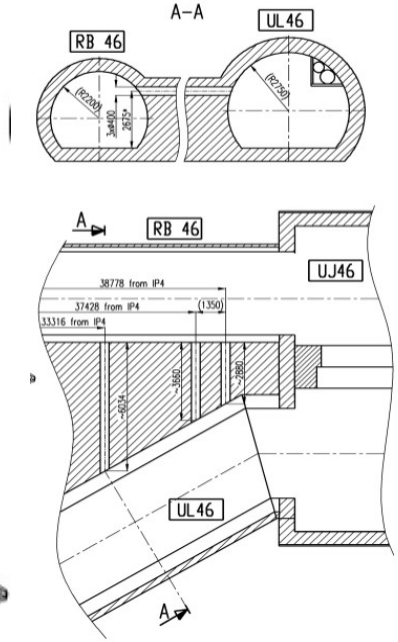

Capture cavity layout (not installed)

LLRF close to Amplifier (small loop delay)

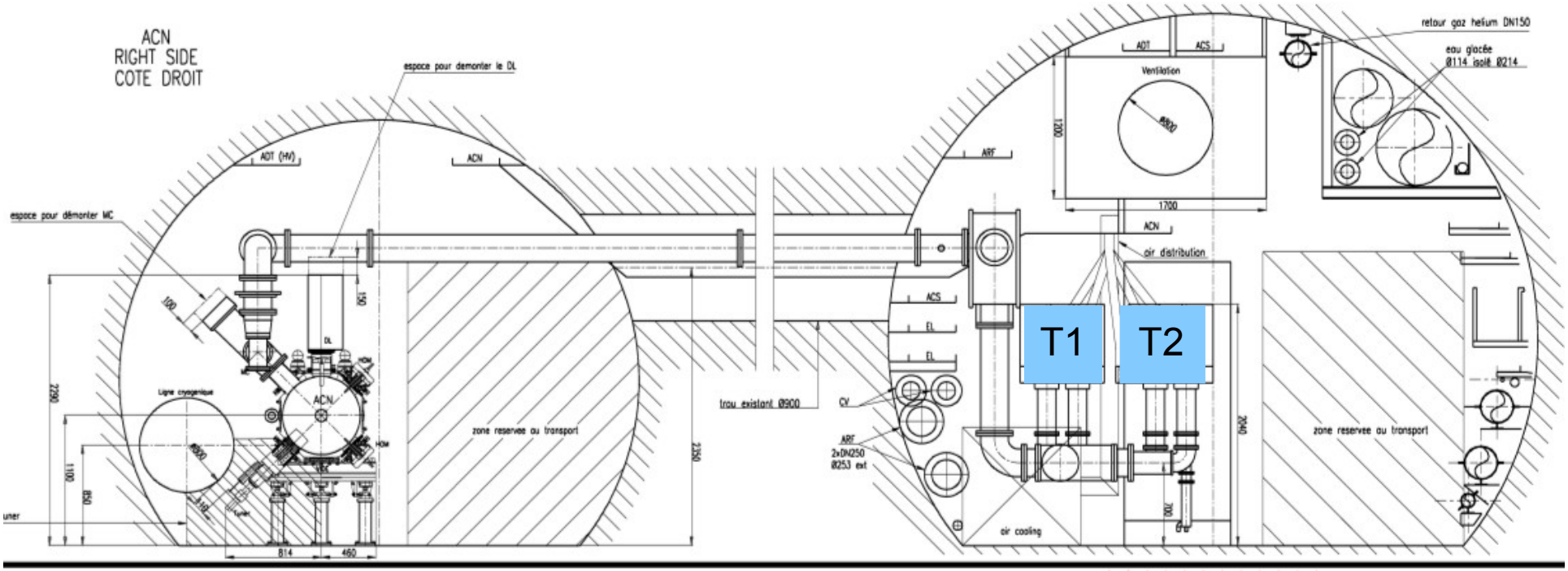

~9m of space in P4, QRL close to beamline

Left of IR4

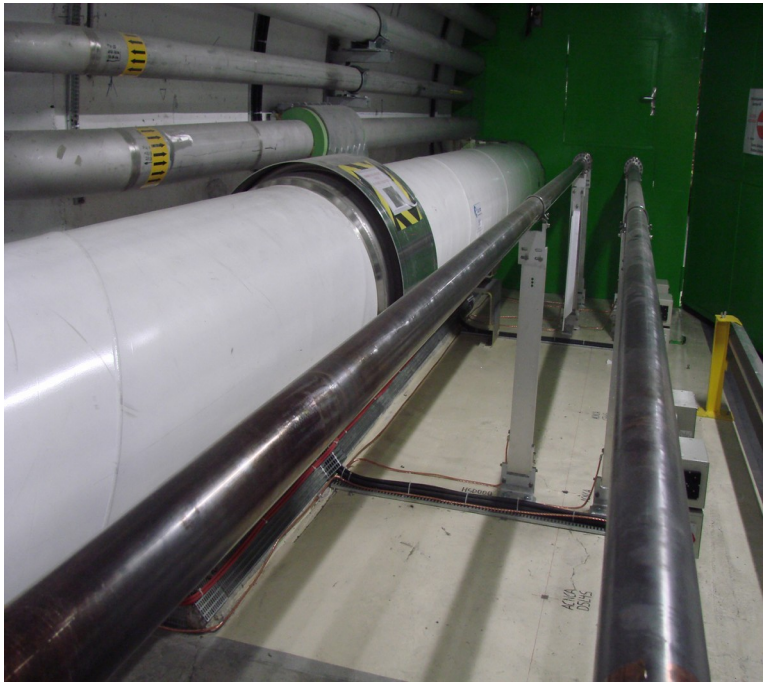

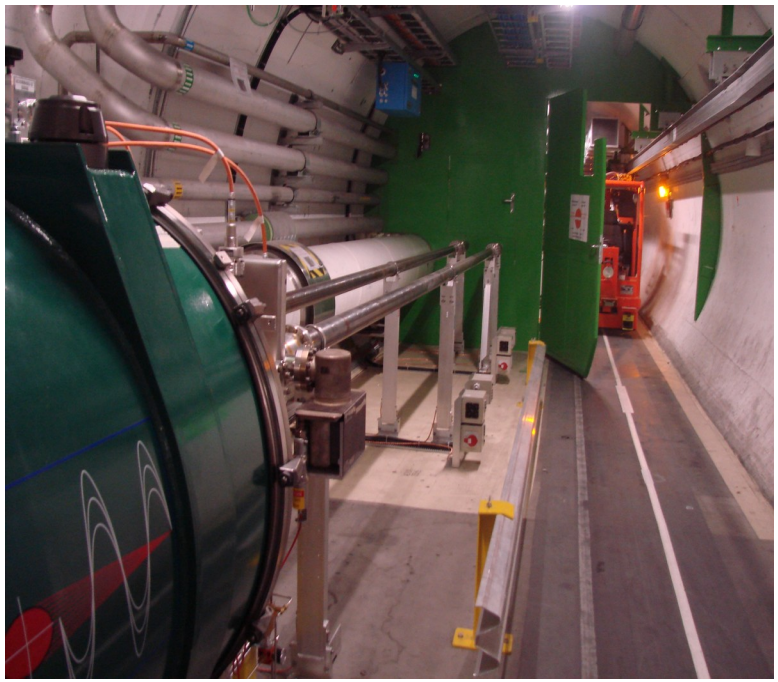

Right of IR4

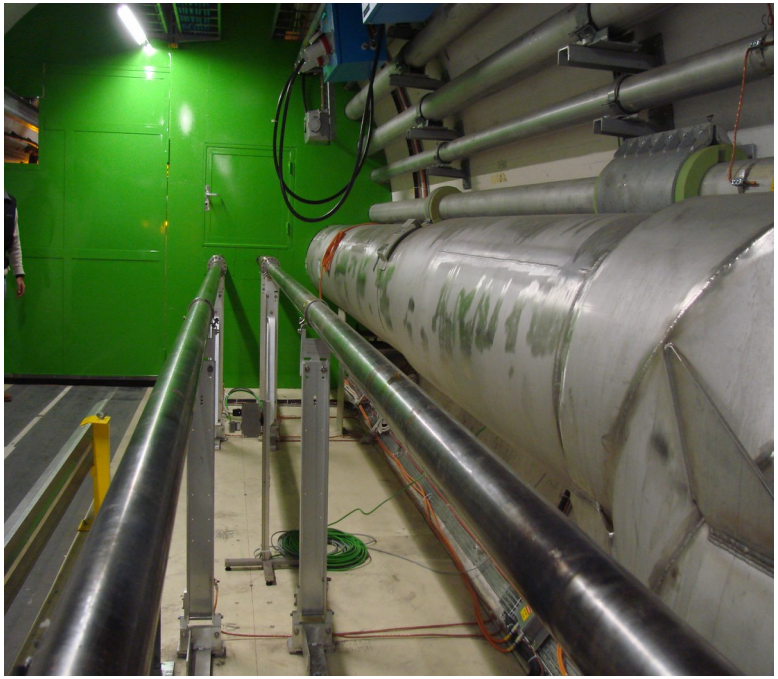

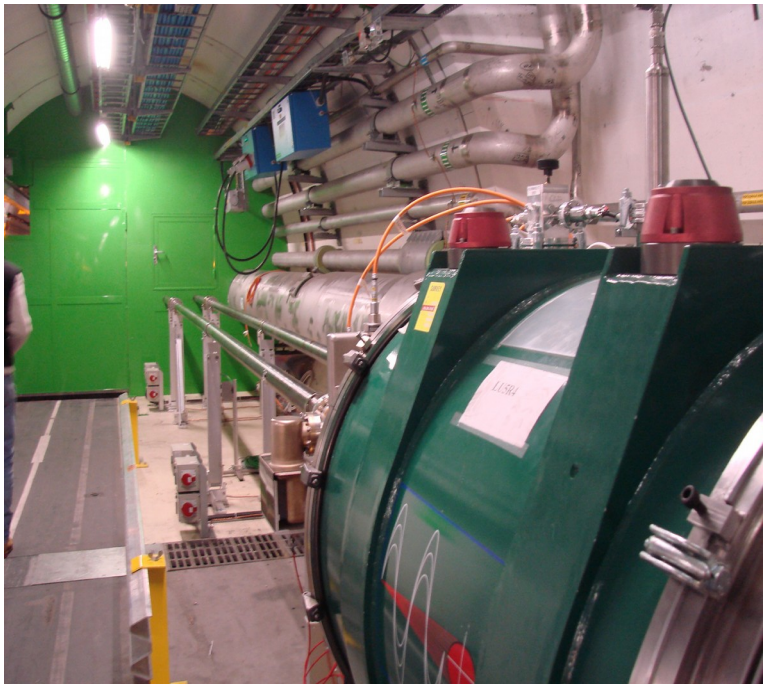

Prelim CM Design, 800 MHz

Front View

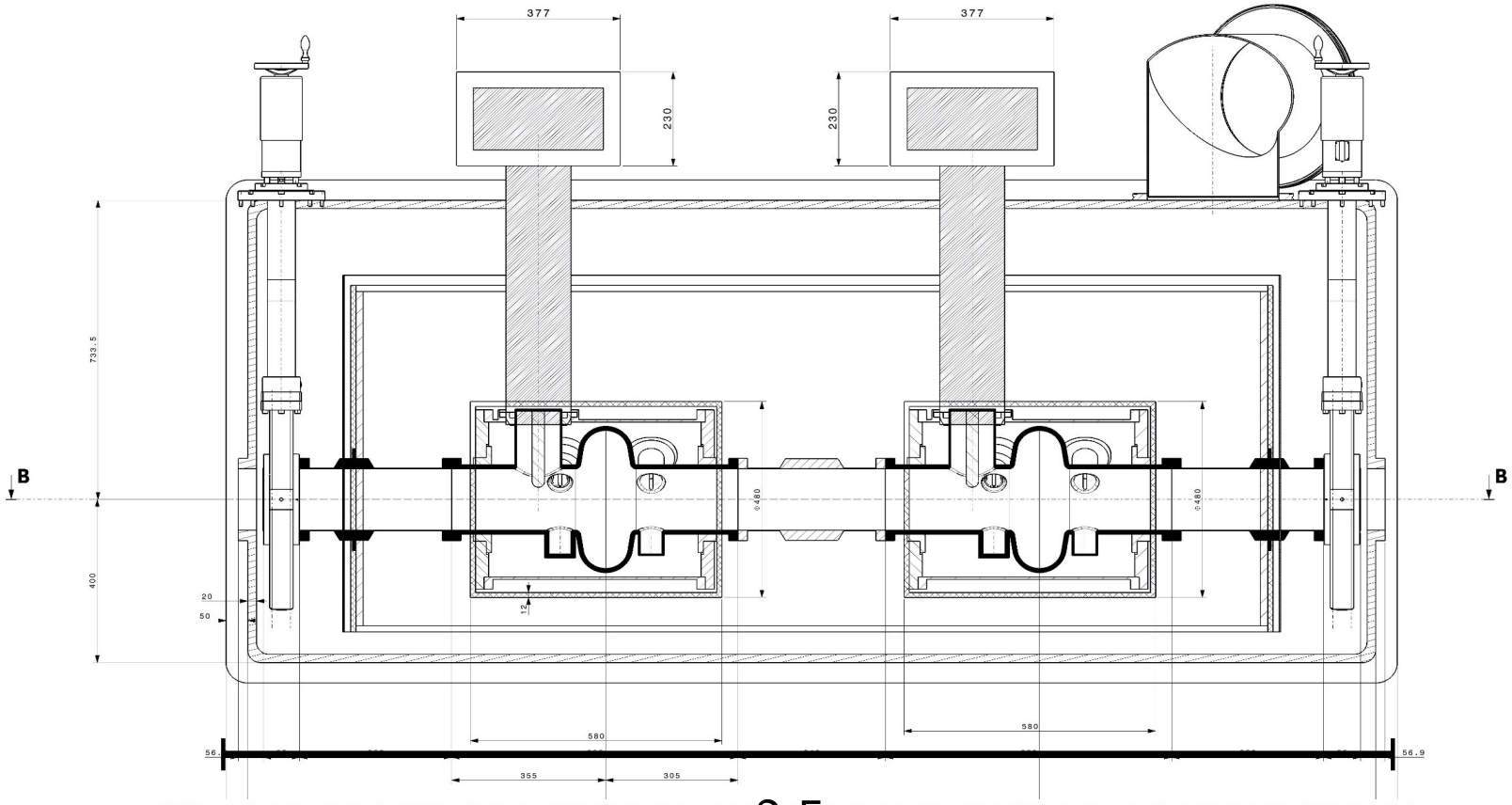

~2.5 m

Top View

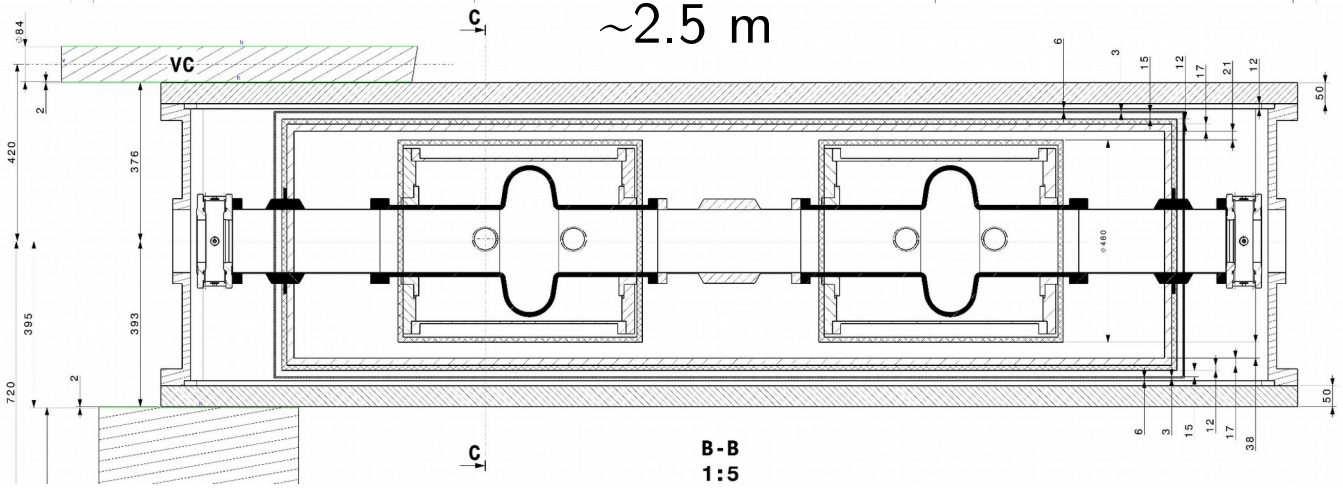

Prelim CM Integration, P4

Integration with QRL is feasible with a “crab-like” cryostat

Left of IR4

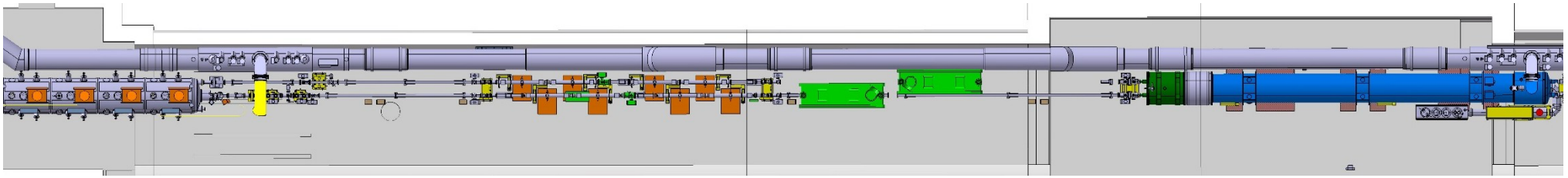

Right of IR4

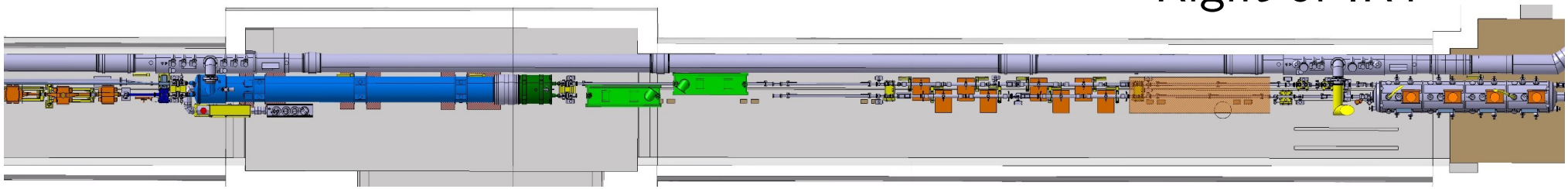

Prelim CM Integration, P4

Exact longitudinal location has to determined from integration with RF power

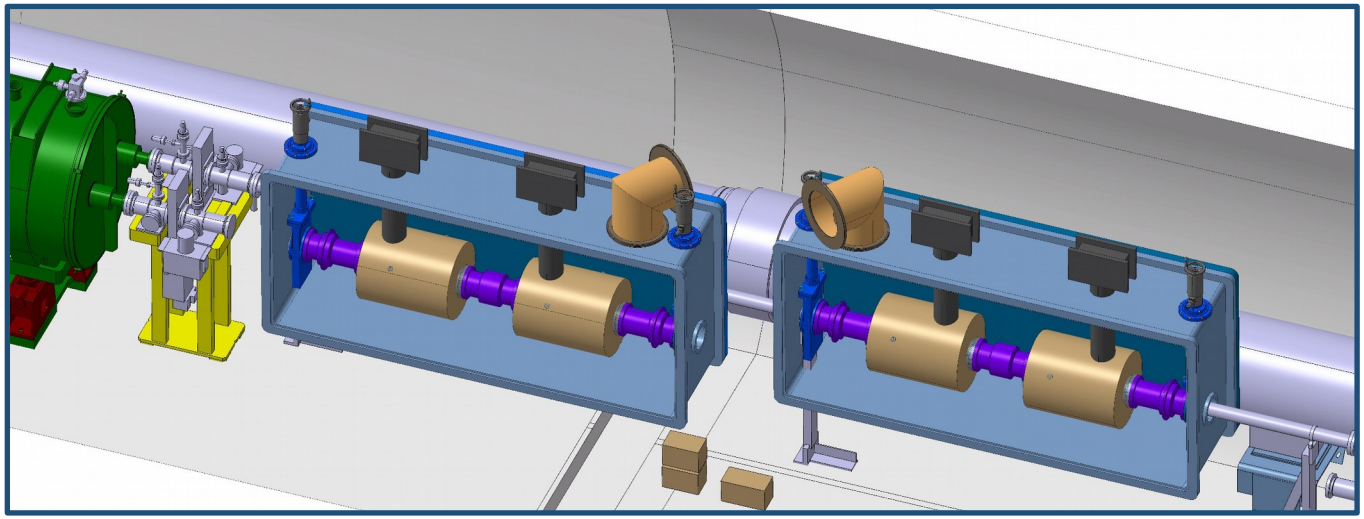

Left of IR4

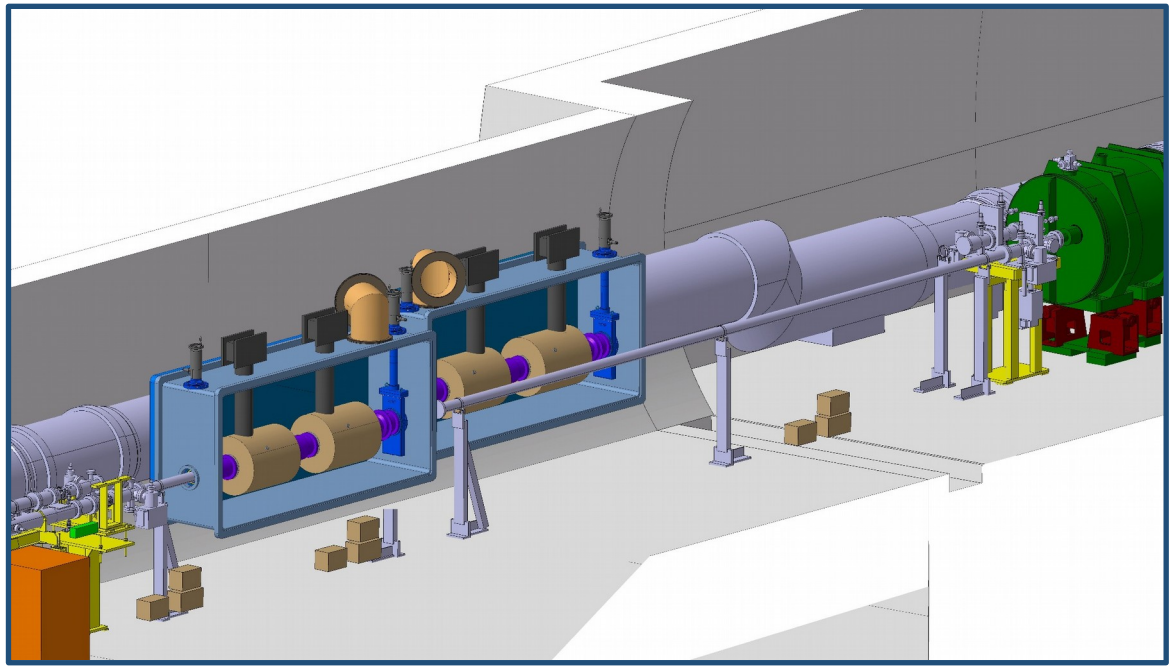

Right of IR4

200 MHz, LHC

Capture & accelerate higher intensity in LHC (N_b ~2.4×10^{11} p/b)

Need 1-module of existing ACS-400 as 2nd harmonic (bunch shortening)

6MV (4-cavities /beam) should be largely sufficient

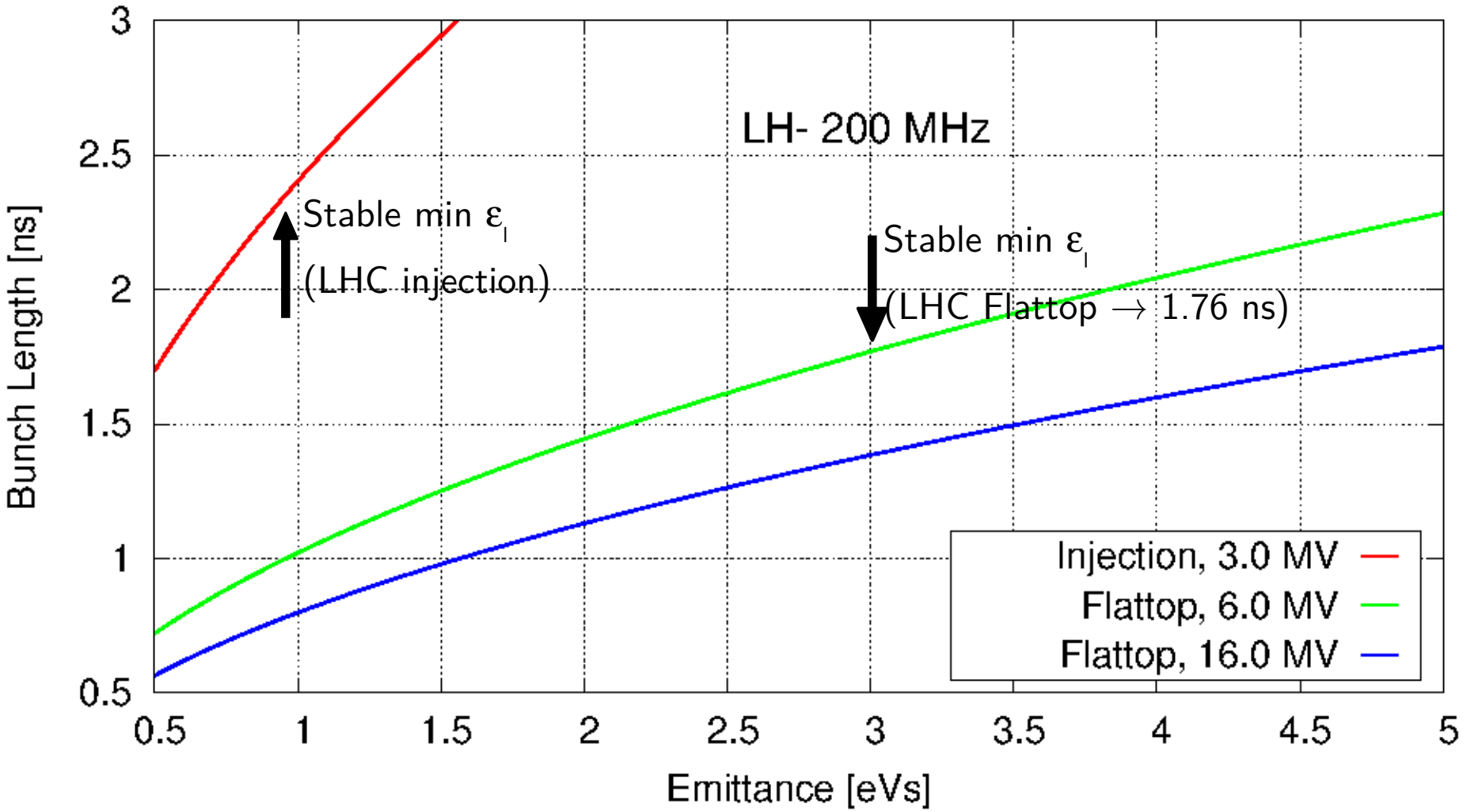

SC-200 MHz

$\lambda/4$ coaxial line $\rightarrow$ 20% smaller than ACS-400

New type of cavity, will require some R&D to demonstrate performance, input coupling & HOM damping

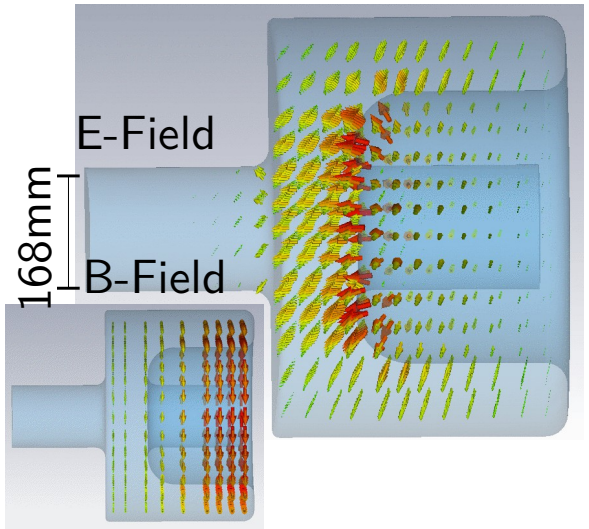

Voltage [MV]	2.0
Frequency [MHz]	**200.3**
R/Q [Ω]	51
Epk [MV/m], Bpk [mT]	29, 68
Aperture [mm]	168
Cavity Envelope [mm]	284

200 MHz, RF Power

With 4-cavities, V=6MV, RF Power <450 kW/cav
Constant Voltage & Power (½-detuning)
(+ ACS-400 MHz V=3MV, P=200kW)

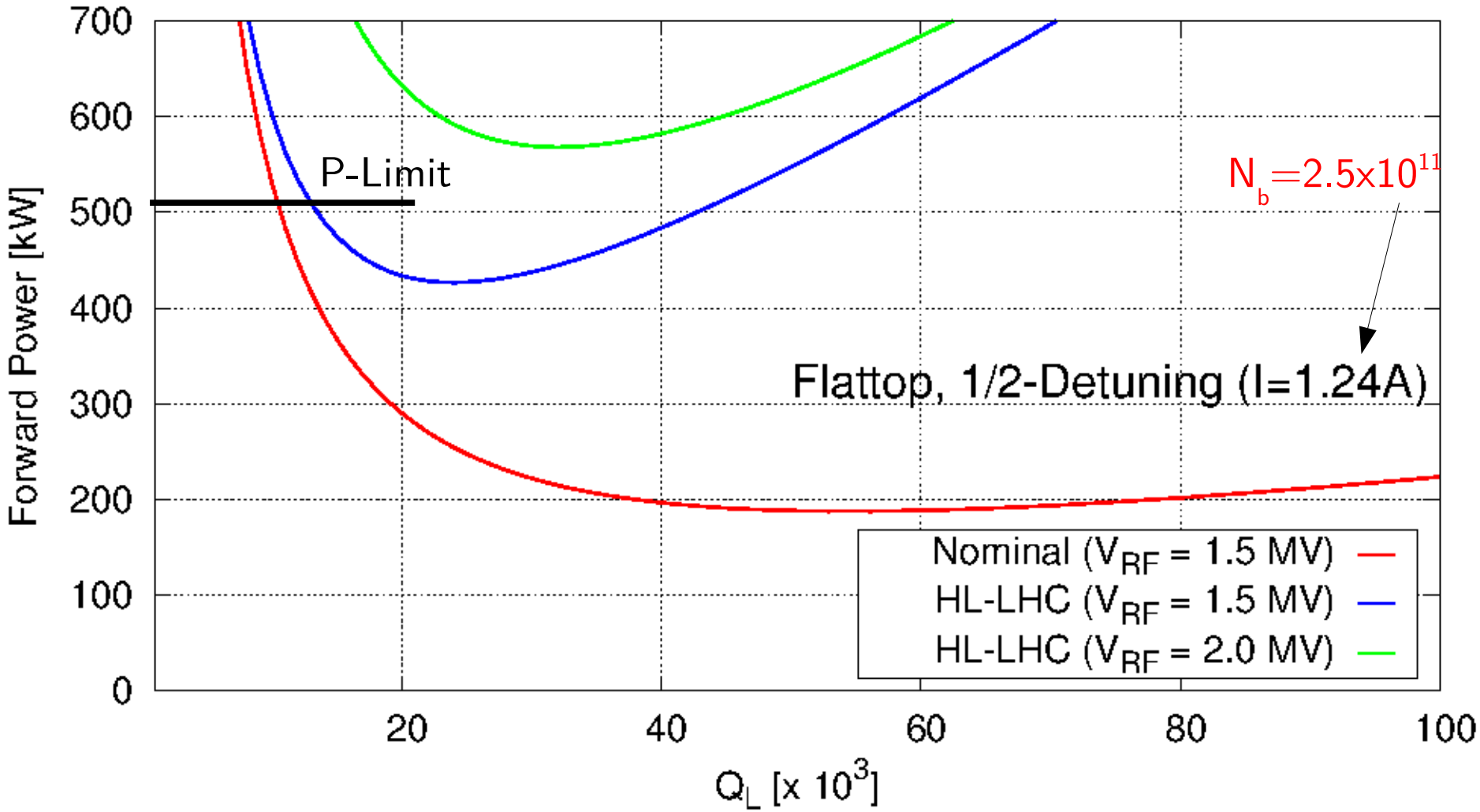

A: Cryogenic Table

Prelim Estimates

		Crab Cavities (2K)	400 MHz (4.5K)	800 MHz (4.5K)	200 MHz (4.5K)
Static (/cavity)		8	50 (?)	10	10
Dynamic (/cavity)	Cavity	3	25	15-60	5
	Other	4	10 (?)	10 (?)	10(?)
Total [W] (/Module)		~30 (2-cavities)	~340 (4-cavities)	~140-320 (4-cavities)	~100 (4-cavities)

Total cryogenic needs, note estimates are approx for harmonics:

Crabs (2K):	3.4 MV, total #: 32 →	960 W, P1+P5
ACS-400:	2.0 MV, total #: 16 →	1360 W, P4
800 MHz:	2.0 MV, total #: 8 →	280-640 W
200 MHz:	1.5 MV, total #: 8 →	200 W

Discussion

Option I, ACS-400 MHz only

Full-detuning scheme for HL-LHC (consequence phase modulation)

Could double the system to resort back to ½-detuning

Option II: 400+ HH- 800 MHz

BS-mode for stability, flattening with noise & possibly restore ½ detuning

Compatible with QRL, <u>need ~5m/beam in IR4</u> & close to ACS-400

Option III: LH- 200 MHz + 400

Higher currents & longer bunches (experiments?)

Replace one ACS-400 module with 200 MHz, no additional space

Both harmonic systems need prototyping & technology validation (~5-6 yrs)

Flatter Bunches (w/o 800MHz)

Simulations: T.Argyropoulos

Motivation: stability, heating, pile-up

Depopulate the core by phase modulation close to f_s or by injecting controlled noise

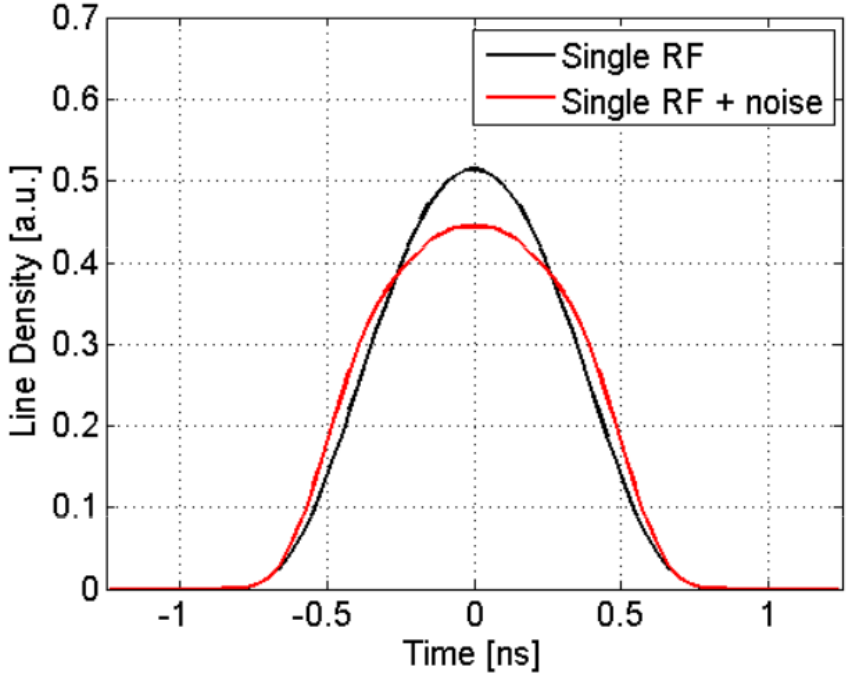

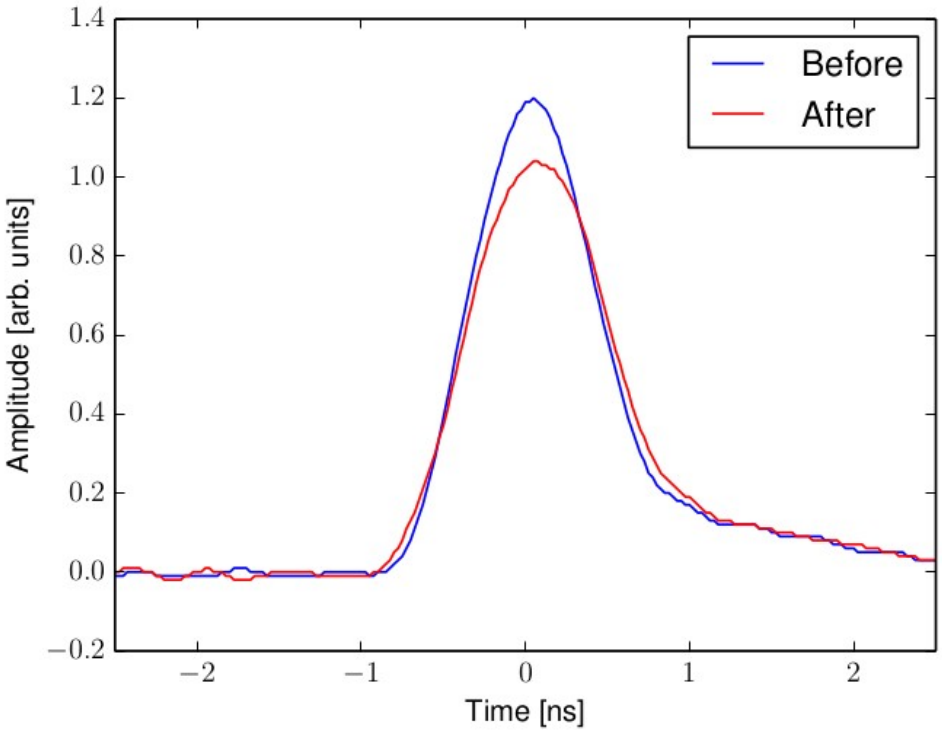

LHC-MD-2012, experimental results, flattening at 4 TeV (asymmetry due to transfer function of cables)

J. Mueller et al. CERN-ACC-NOTE-2014-0011

Heat load, SPS

TCF20 in BA4 liquefaction test:

- 0.75 g/s (up to 1.5 g/s with LN2 boost)

Total static+dynamics ~1.6 g/s (~30 W, quite frugal)

Buffer Tank (150L) for 10h operation

Proposal:

Cryo has identified a new TCF50 plant to extend heat load to 2.1 g/s

Additional buffer tank → margin for dynamic load during ~10h operation

THANKS!

A: ACS Modifications, RUNII

New module to replace B2 sick cavity

Thyratron (HV $\rightarrow$ Ground), replaced by robust solid state device

HV connector spring contact related klystron filament glitches $\rightarrow$ Replaced

Arc detectors waveguide $\rightarrow$ Radiation resistant new design

Kylstron collector heating $\rightarrow$ Upgraded with 500 kW compatible collectors

RF controls upgrade (linux migration, FESA3, an other softwares standardization)

RF Operational Proposal (Evian 2014, P/ Baudrenghien):

- Injection: 6 MV capture at 0.5eVs
- Flattop: 12 MV at 2.5 eVs $\rightarrow$ 1.2ns

Bunch-by-bunch phase measurement $\rightarrow$ energy loss/bunch

Amplitude/phase noise measurement $\rightarrow$ limit abort gap population

Post LS1 Plans: ACS-Cavity

Courtesy K. Schrim

Immediate

Recover LHC module removed from machine by either He processing in-situ or exchange sick cavity

Recover cavity 19 (with He-tank) in SM18 either by new chemistry, High pressure rinsing and Nb new coating.

Medium Term

2 LHC cavities in fabrication (available Dec 2014)

Design/build eventually some (4-8) spare cavities with He tanks

A: Integration

CM lengths for 800MHz & 200MHz are preliminary

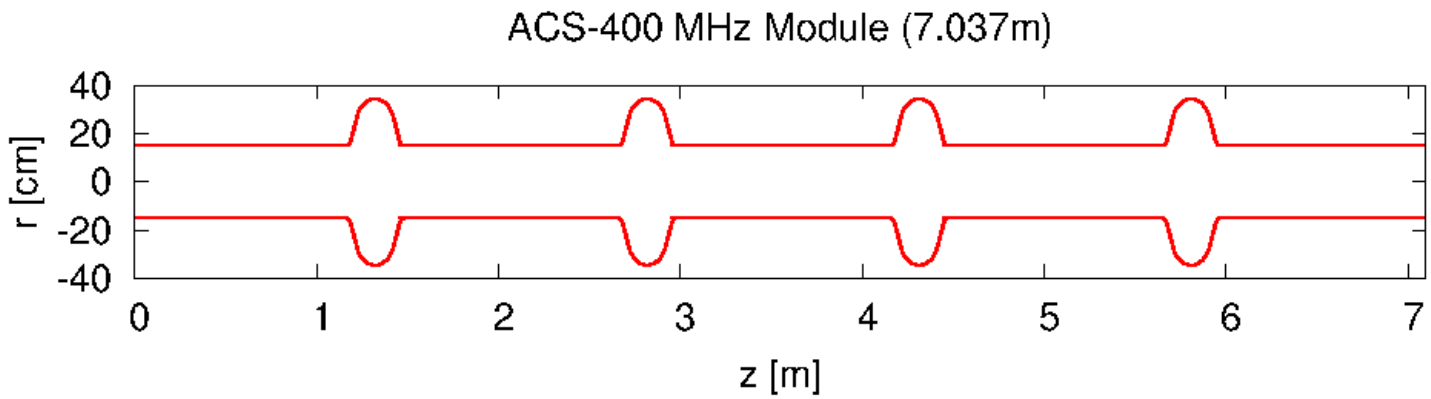

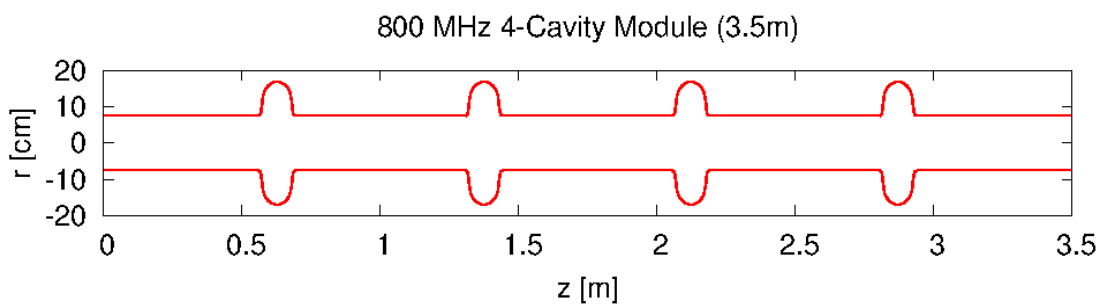

A 2-cavity module would be more modular for a modest (~15%) increase in length

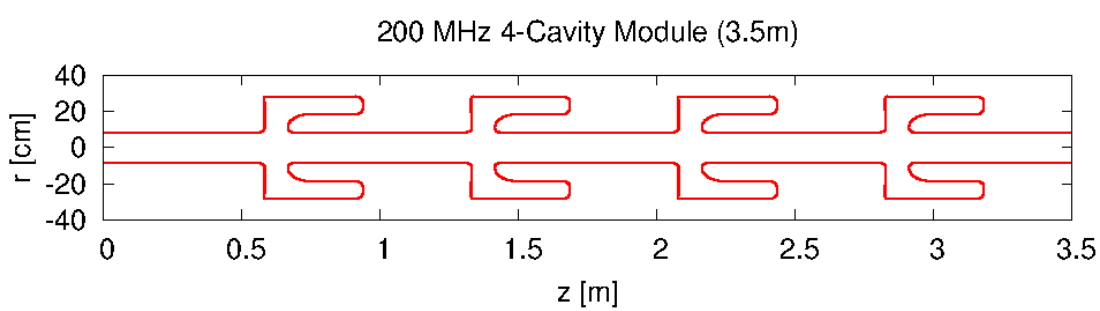

Detailed engineering will help determine actual lengths

A: Power Limit, Klystron

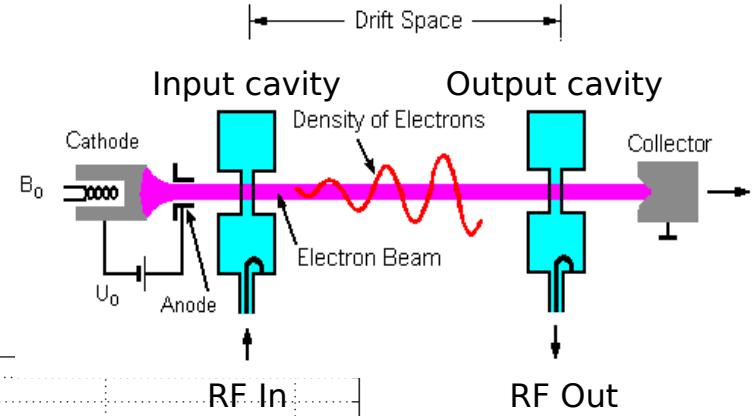

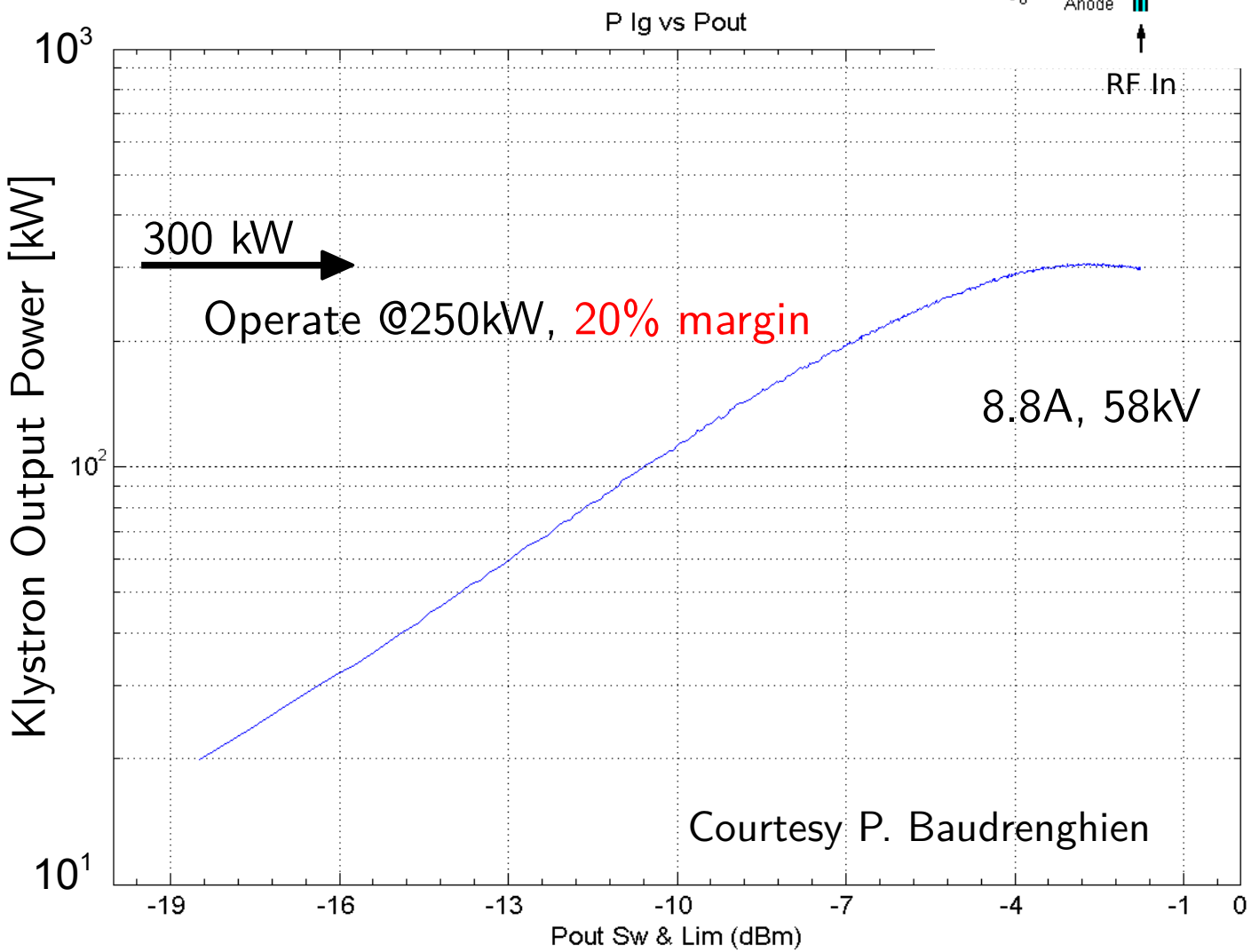

A: 800 MHz,BL-Mode

Even ± 1-degree phase shift w.r.t to ACS-400 MHz can have impact on stability

Courtesy: J. Mueller

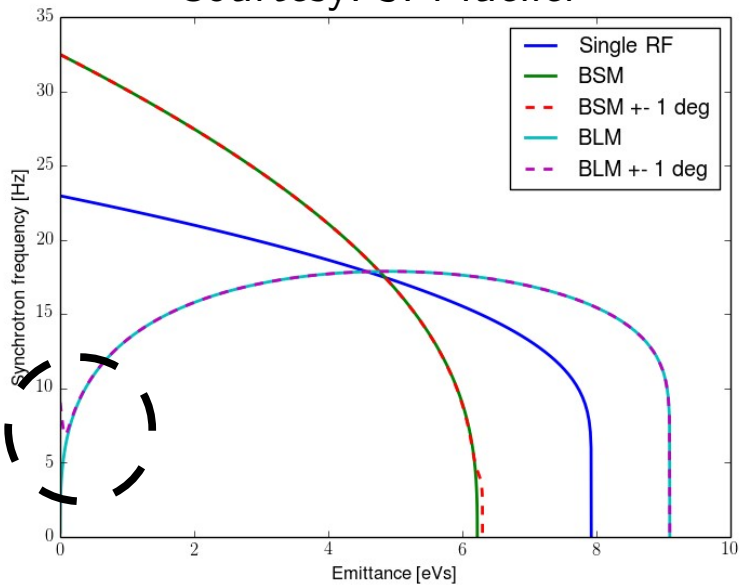

Phase shift w.r.t to ACS-400 MHz can lead to tilted profiles possibly negating the effects originally intended
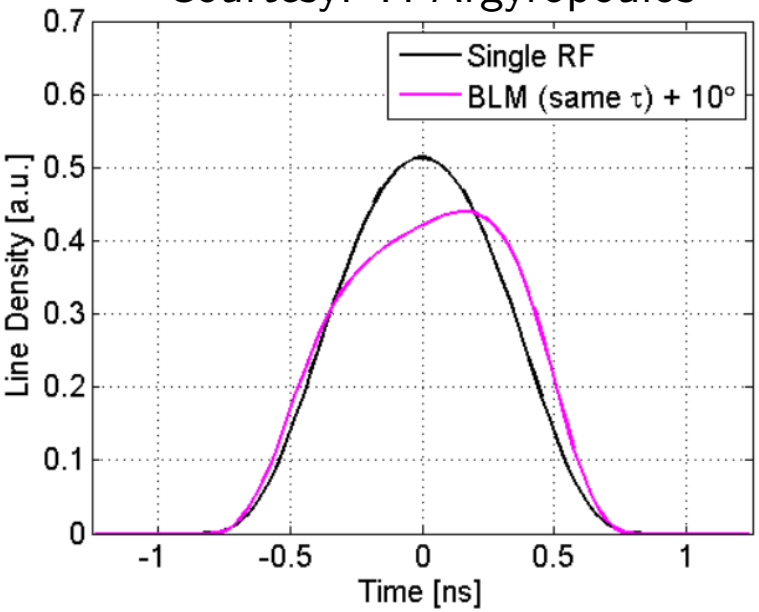
Courtesy: T. Argyropoulos