CAD to Geant4 Conversion

Matti Kalliokoski
BE-BI-BL

MoEDAL software meeting
18/02/15

Geometry Description Markup Language (GDML)

- Application-independent geometry description format based on XML
- Geant4 and ROOT have toolkit bindings for GDML import
  - Not one to one compatible though CAD models can be imported to ROOT and passed to Geant4
- In Geant4 writer is called through G4GDMLParser
  - Requires XercesC parser

G4GDMLParser

- Part of persistency package
  - In Geant4.10 needs to be additionally selected during installation
    - cmake –DGEANT4_USE_GDML=ON
- G4GDMLParser instance dumps the geometry tree to the top volume
- Can be done anywhere in the user code provided only that the Geant4 geometry tree is already instantiated in the memory
- Four examples in examples/extended/persistency/gdml/

CAD to GDML Conversion

- Various options exists depending on preferred CAD tool
- Some examples:
  - FreeCAD to GDML project: http://cad-gdml.in2p3.fr/
    - Not finalized, has some limitations on complex geometries
  - CATIA-GDML geometry builder: http://iopscience.iop.org/1742-6596/331/3/032035/
  - FASTRAD http://www.fastrad.net/,
    - STEP to GDML converter
    - STEP files can be created with most of the CAD tools (AutoCAD Mechanical, CATIA, SolidWorks etc.)

Example: Shielding Box

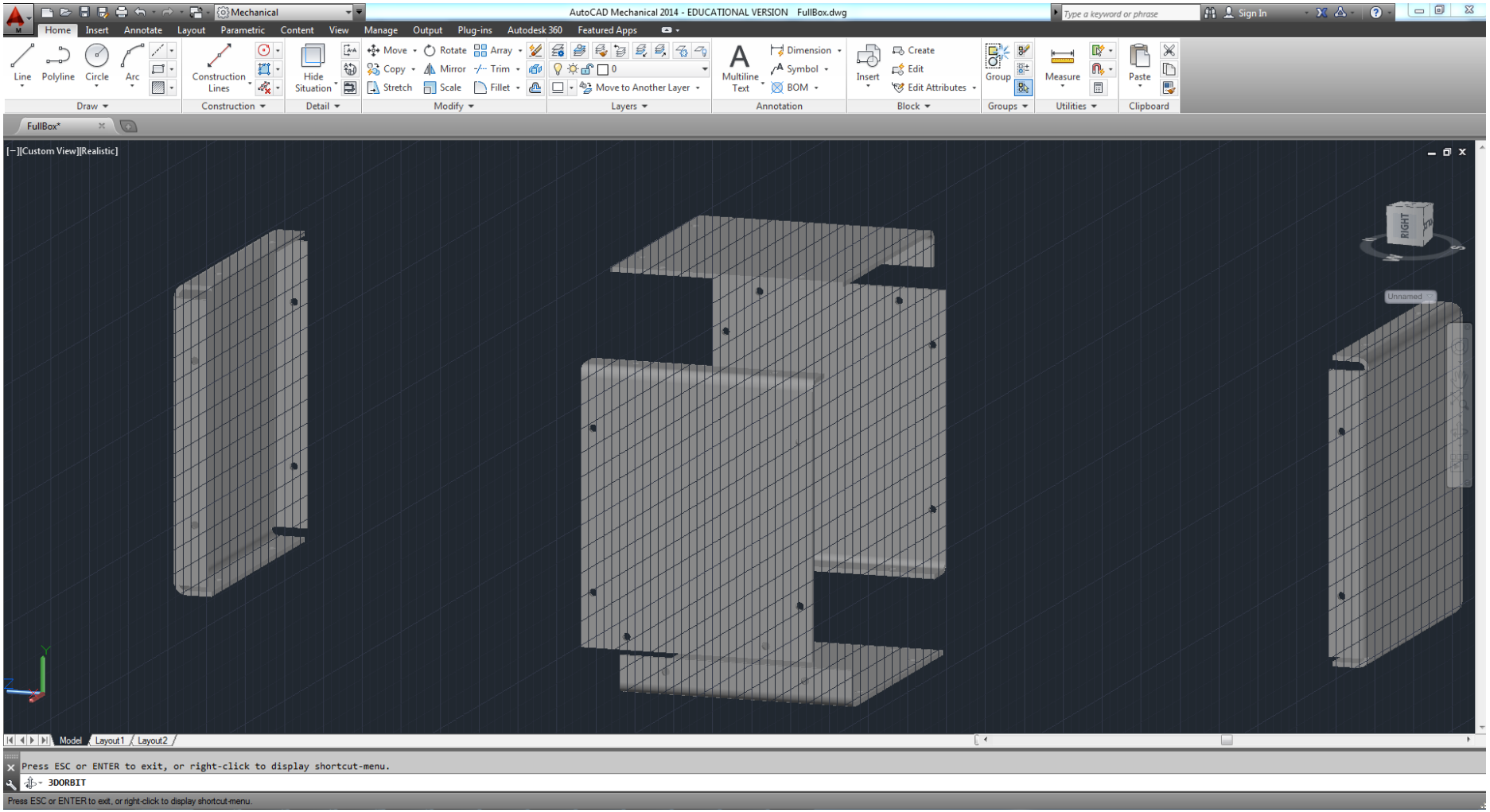

Example: Shielding Box

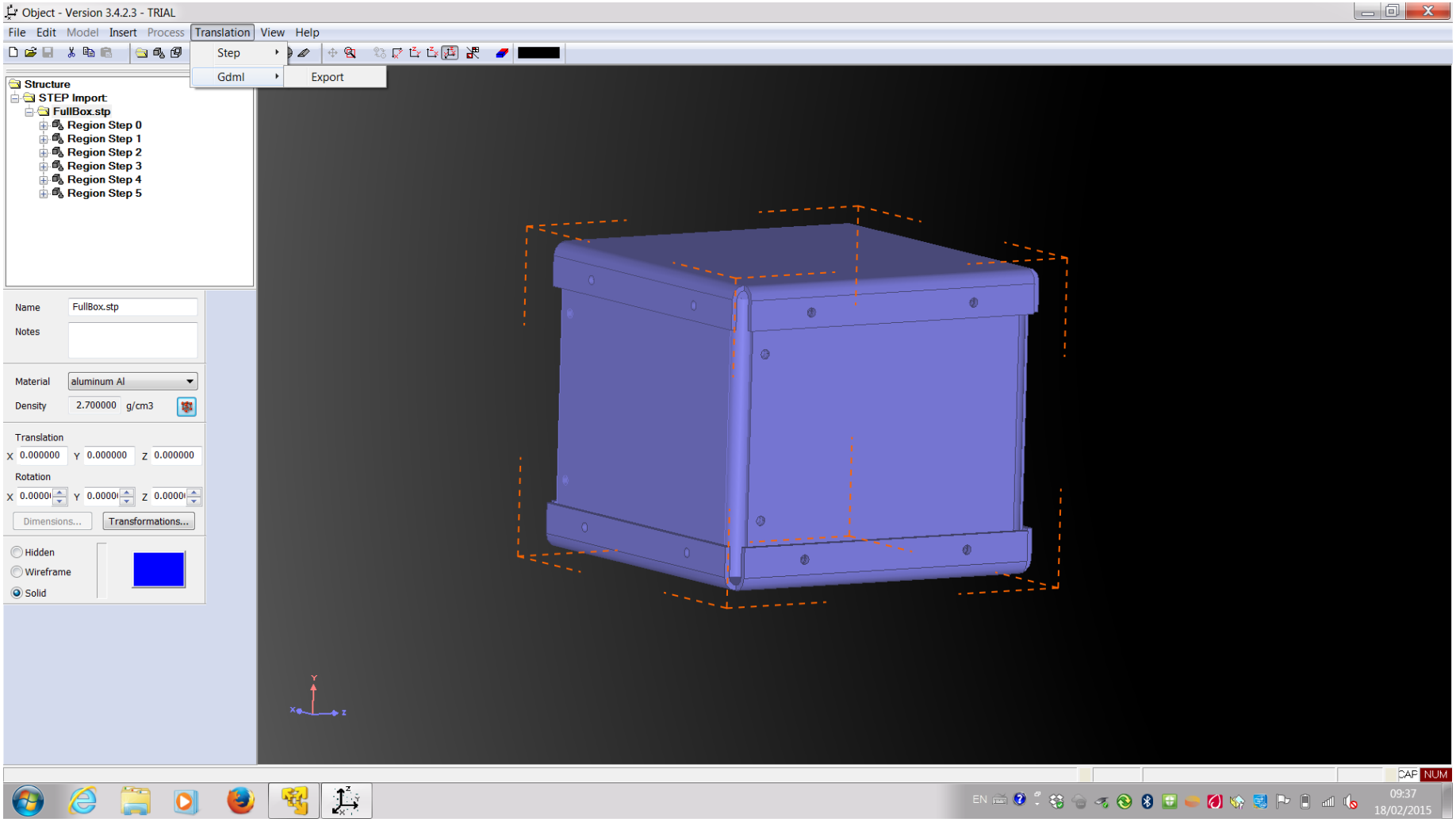

Example: Shielding Box

- In GDML export, single or multiple files can be created
  - Single file optimal for small models
  - Separate file for each component better for more complex models
    - Better for modifications

File Edit View Places Help

Name	Size	Type	Date Modified
Boxi.gdml	2.5 KB	XML document	Mon 07 Oct 2013 07:07:47 PM CEST
Boxi_materials.xml	889 bytes	XML document	Mon 07 Oct 2013 07:16:30 PM CEST
Step_0.gdml	63.7 KB	XML document	Mon 07 Oct 2013 07:10:38 PM CEST
Step_1.gdml	63.9 KB	XML document	Mon 07 Oct 2013 07:10:56 PM CEST
Step_2.gdml	51.7 KB	XML document	Mon 07 Oct 2013 07:11:12 PM CEST
Step_3.gdml	51.9 KB	XML document	Mon 07 Oct 2013 07:11:25 PM CEST
Step_4.gdml	51.8 KB	XML document	Mon 07 Oct 2013 07:11:40 PM CEST
Step_5.gdml	51.7 KB	XML document	Mon 07 Oct 2013 07:11:54 PM CEST

Example: Shielding Box

S1DetectorConstruction.cc

```
#include "S1SteppingAction.hh"
   // use of stepping action to set the accounting volume

#include "G4AssemblyVolume.hh"
#include "G4RunManager.hh"
#include "G4NistManager.hh"
#include "G4Box.hh"
#include "G4Cons.hh"
#include "G4Orb.hh"
#include "G4Sphere.hh"
#include "G4Trd.hh"
#include "G4LogicalVolume.hh"
#include "G4PVPlacement.hh"
#include "G4PVReplica.hh"
#include "G4VisAttributes.hh"
#include "G4Colour.hh"

#include "G4GDMLParser.hh"

//....oooOO0OOooo........oooOO0OOooo........oooOO0OOooo........oooOO0OOooo......

S1DetectorConstruction::S1DetectorConstruction()
: G4VUserDetectorConstruction()
{
        fReadFile="/home/kallioko/workdir/geant4/SIDER-GDML/SIDER1/GDML_Boxi/Boxi.gdml";
}

//....oooOO0OOooo........oooOO0OOooo........oooOO0OOooo........oooOO0OOooo......

S1DetectorConstruction::~S1DetectorConstruction()
{ }


//....oooOO0OOooo........oooOO0OOooo........oooOO0OOooo........oooOO0OOooo......

G4VPhysicalVolume* S1DetectorConstruction::Construct()
{
        // Get nist material manager
        G4NistManager* nist = G4NistManager::Instance();
        G4RotationMatrix* rot = new G4RotationMatrix(0,0,0);

        // Option to switch on/off checking of volumes overlaps
        G4bool checkOverlaps = true;

        parser.Read(fReadFile);
        physiWorld = parser.GetWorldVolume();

        G4String fname = physiWorld->GetName();
        G4cout << fname << G4endl;

        logicWorld = physiWorld->GetLogicalVolume();
```

Example: Shielding box

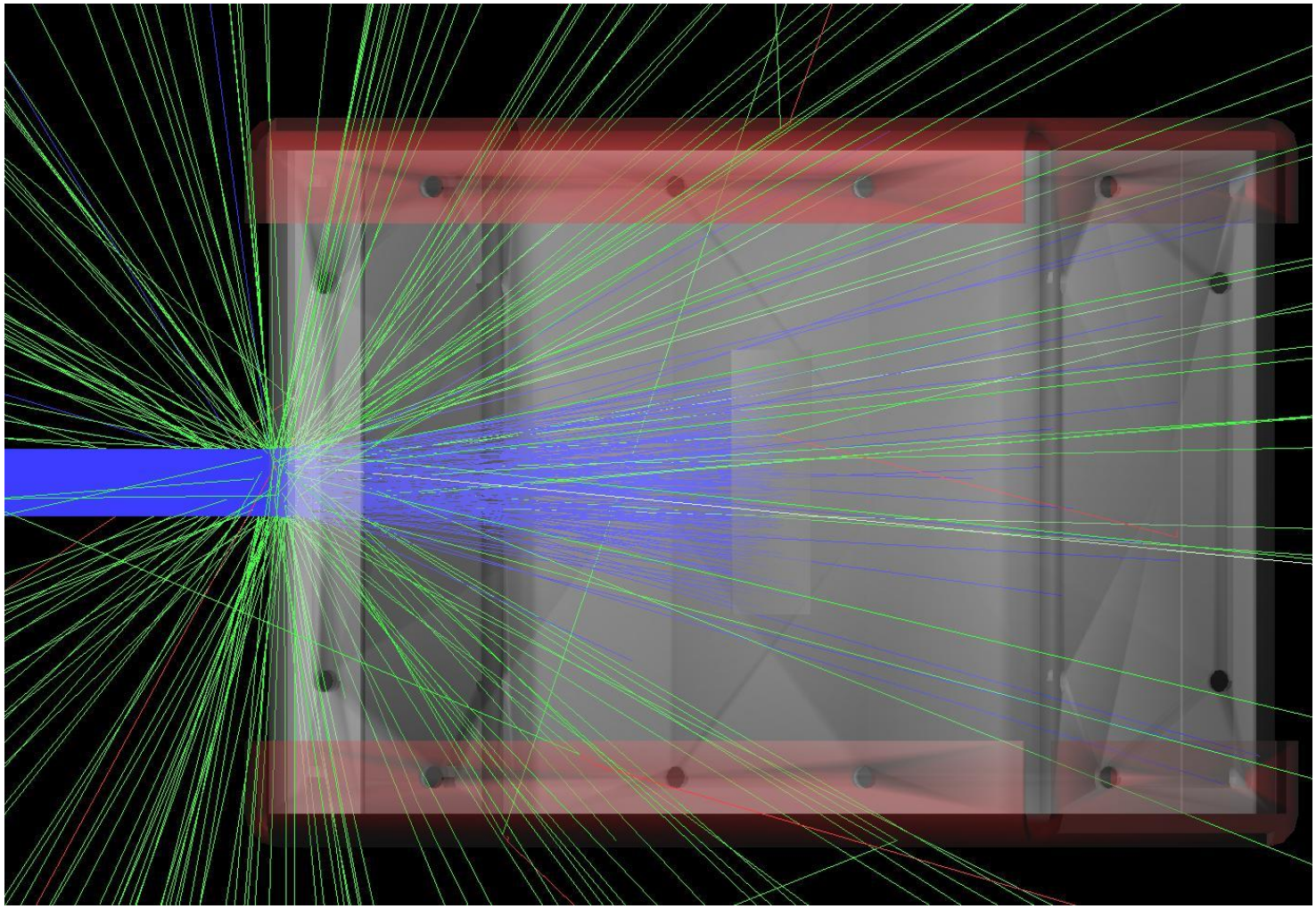

Material description

```
<?xml version="1.0" encoding="UTF-8"?>
<!-- GDML materials definition from the Fastrad file : "NuSTAR-TPC_310
- <materials>
  - <element Z="1" formula="VACUUM" name="videRef">
      <atom value="1"/>
    </element>
  - <element Z="1" formula="H" name="hydrogen">
      <atom value="1.00794"/>
    </element>
  - <element Z="2" formula="He" name="helium">
      <atom value="4.002602"/>
    </element>
  - <element Z="3" formula="Li" name="lithium">
      <atom value="6.941"/>
    </element>
  - <element Z="5" formula="B" name="boron">
      <atom value="10.811"/>
    </element>
  - <element Z="6" formula="C" name="carbon">
      <atom value="12.011"/>
    </element>
  - <element Z="7" formula="N" name="nitrogen">
      <atom value="14.00674"/>
    </element>
  - <element Z="8" formula="O" name="oxygen">
      <atom value="15.9994"/>
    </element>
  - <element Z="9" formula="F" name="fluorine">
      <atom value="18.9984032"/>
    </element>
  - <element Z="10" formula="Ne" name="neon">
      <atom value="20.1797"/>
    </element>
```

```
      <D value="1.65" unit="g/cm3"/>
      <fraction ref="H24C12O2N" n="0.70000"/>
      <fraction ref="SiO4" n="0.30000"/>
    </material>
  - <material formula="(C22H10N2O5)n" name="Kapton">
      <D value="1.40" unit="g/cm3"/>
      <composite ref="carbon" n="22"/>
      <composite ref="hydrogen" n="10"/>
      <composite ref="nitrogen" n="2"/>
      <composite ref="oxygen" n="5"/>
    </material>
  - <material formula="SiO2CaOAl2O3B2O3K2OFe2O3Li2O" name="Stesalite">
      <D value="2.1600" unit="g/cm3"/>
      <fraction ref="SiO2" n="0.668"/>
      <fraction ref="CaO" n="0.05"/>
      <fraction ref="Al2O3" n="0.03"/>
      <fraction ref="B2O3" n="0.22"/>
      <fraction ref="Na2O" n="0.01"/>
      <fraction ref="K2O" n="0.015"/>
      <fraction ref="Li2O" n="0.005"/>
      <fraction ref="Fe2O3" n="0.002"/>
    </material>
  - <material formula="ArCO2" name="ArCO2">
      <D value="0.0018" unit="g/cm3"/>
      <fraction ref="argon" n="0.7000"/>
      <fraction ref="CO2" n="0.3000"/>
    </material>
  - <material formula="C5H4O2" name="Mylar">
      <D value="1.39" unit="g/cm3"/>
      <composite ref="carbon" n="5"/>
      <composite ref="hydrogen" n="4"/>
      <composite ref="oxygen" n="2"/>
    </material>
  - <material formula="AlCOOH" name="AlMylar">
      <D value="1.39" unit="g/cm3"/>
      <fraction ref="Mylar" n="0.8333"/>
      <fraction ref="aluminum" n="0.1667"/>
    </material>
</materials>
```

More Complex Models

- In simple models it is easy to see if elements are overlapping
  - Will create an error in execution of Geant4
- For more complex models care should be taken in design phase
- More complexity will require more memory in the execution
  - Optimization
    - Remove parts (bolts, washers etc.) that don’t affect the results

Example: Planetary Gearbox

Gear.gdml
Gear_materi...
Step_0.gdml
Step_1.gdml
Step_2.gdml
Step_3.gdml
Step_4.gdml
Step_5.gdml
Step_6.gdml
Step_7.gdml
Step_8.gdml
Step_9.gdml
Step_10.gdml
Step_11.gdml
Step_12.gdml
Step_13.gdml
Step_14.gdml
Step_15.gdml
Step_16.gdml
Step_17.gdml
Step_18.gdml
Step_19.gdml
Step_20.gdml
Step_21.gdml
Step_22.gdml
Step_23.gdml
Step_24.gdml
Step_25.gdml
Step_26.gdml
Step_27.gdml
Step_28.gdml
Step_29.gdml
Step_30.gdml
Step_31.gdml
Step_32.gdml
Step_33.gdml
Step_34.gdml
Step_35.gdml
Step_36.gdml
Step_37.gdml
Step_38.gdml
Step_39.gdml
Step_40.gdml
Step_41.gdml
Step_42.gdml
Step_43.gdml
Step_44.gdml
Step_45.gdml
Step_46.gdml
Step_47.gdml
Step_48.gdml
Step_49.gdml
Step_50.gdml
Step_51.gdml
Step_52.gdml
Step_53.gdml
Step_54.gdml
Step_55.gdml
Step_56.gdml
Step_57.gdml
Step_58.gdml
Step_59.gdml
Step_60.gdml
Step_61.gdml
Step_62.gdml
Step_63.gdml
Step_64.gdml
Step_65.gdml
Step_66.gdml
Step_67.gdml
Step_68.gdml
Step_69.gdml
Step_70.gdml
Step_71.gdml
Step_72.gdml
Step_73.gdml
Step_74.gdml
Step_75.gdml
Step_76.gdml
Step_77.gdml
Step_78.gdml
Step_79.gdml
Step_80.gdml
Step_81.gdml
Step_82.gdml
Step_83.gdml
Step_84.gdml
Step_85.gdml
Step_86.gdml
Step_87.gdml
Step_88.gdml
Step_89.gdml
Step_90.gdml
Step_91.gdml
Step_92.gdml
Step_93.gdml
Step_94.gdml
Step_95.gdml
Step_96.gdml
Step_97.gdml
Step_98.gdml
Step_99.gdml
Step_100.gdml
Step_101.gdml
Step_102.gdml
Step_103.gdml
Step_104.gdml
Step_105.gdml
Step_106.gdml
Step_107.gdml
Step_108.gdml
Step_109.gdml
Step_110.gdml
Step_111.gdml
Step_112.gdml
Step_113.gdml
Step_114.gdml
Step_115.gdml
Step_116.gdml
Step_117.gdml
Step_118.gdml
Step_119.gdml
Step_120.gdml
Step_121.gdml
Step_122.gdml
Step_123.gdml
Step_124.gdml
Step_125.gdml
Step_126.gdml
Step_127.gdml
Step_128.gdml
Step_129.gdml
Step_130.gdml
Step_131.gdml
Step_132.gdml
Step_133.gdml
Step_134.gdml
Step_135.gdml
Step_136.gdml
Step_137.gdml
Step_138.gdml
Step_139.gdml
Step_140.gdml
Step_141.gdml
Step_142.gdml
Step_143.gdml
Step_144.gdml
Step_145.gdml
Step_146.gdml
Step_147.gdml
Step_148.gdml
Step_149.gdml
Step_150.gdml
Step_151.gdml
Step_152.gdml
Step_153.gdml
Step_154.gdml
Step_155.gdml
Step_156.gdml
Step_157.gdml
Step_158.gdml
Step_159.gdml
Step_160.gdml
Step_161.gdml
Step_162.gdml
Step_163.gdml
Step_164.gdml
Step_165.gdml
Step_166.gdml
Step_167.gdml
Step_168.gdml
Step_169.gdml
Step_170.gdml
Step_171.gdml
Step_172.gdml
Step_173.gdml
Step_174.gdml
Step_175.gdml
Step_176.gdml
Step_177.gdml
Step_178.gdml
Step_179.gdml
Step_180.gdml
Step_181.gdml
Step_182.gdml
Step_183.gdml
Step_184.gdml
Step_185.gdml
Step_186.gdml
Step_187.gdml
Step_188.gdml
Step_189.gdml
Step_190.gdml
Step_191.gdml
Step_192.gdml
Step_193.gdml
Step_194.gdml
Step_195.gdml
Step_196.gdml
Step_197.gdml
Step_198.gdml
Step_199.gdml
Step_200.gdml
Step_201.gdml
Step_202.gdml
Step_203.gdml
Step_204.gdml
Step_205.gdml
Step_206.gdml
Step_207.gdml
Step_208.gdml
Step_209.gdml
Step_210.gdml
Step_211.gdml
Step_212.gdml
Step_213.gdml
Step_214.gdml
Step_215.gdml
Step_216.gdml
Step_217.gdml
Step_218.gdml
Step_219.gdml
Step_220.gdml
Step_221.gdml
Step_222.gdml
Step_223.gdml
Step_224.gdml
Step_225.gdml
Step_226.gdml
Step_227.gdml
Step_228.gdml
Step_229.gdml
Step_230.gdml
Step_231.gdml
Step_232.gdml
Step_233.gdml
Step_234.gdml
Step_235.gdml
Step_236.gdml
Step_237.gdml
Step_238.gdml
Step_239.gdml
Step_240.gdml
Step_241.gdml
Step_242.gdml
Step_243.gdml
Step_244.gdml
Step_245.gdml
Step_246.gdml
Step_247.gdml
Step_248.gdml
Step_249.gdml
Step_250.gdml
Step_251.gdml
Step_252.gdml
Step_253.gdml
Step_254.gdml
Step_255.gdml
Step_256.gdml
Step_257.gdml
Step_258.gdml
Step_259.gdml
Step_260.gdml
Step_261.gdml
Step_262.gdml
Step_263.gdml
Step_264.gdml
Step_265.gdml
Step_266.gdml
Step_267.gdml
Step_268.gdml
Step_269.gdml
Step_270.gdml
Step_271.gdml
Step_272.gdml
Step_273.gdml
Step_274.gdml
Step_275.gdml
Step_276.gdml
Step_277.gdml
Step_278.gdml
Step_279.gdml
Step_306.gdml
Step_307.gdml
Step_308.gdml
Step_309.gdml
Step_310.gdml
Step_311.gdml
Step_312.gdml
Step_313.gdml
Step_314.gdml
Step_315.gdml
Step_316.gdml
Step_317.gdml
Step_318.gdml
Step_319.gdml
Step_320.gdml
Step_321.gdml
Step_322.gdml
Step_323.gdml
Step_350.gdml
Step_351.gdml
Step_352.gdml
Step_353.gdml
Step_354.gdml
Step_355.gdml
Step_356.gdml
Step_357.gdml
Step_358.gdml
Step_359.gdml
Step_360.gdml
Step_361.gdml
Step_362.gdml
Step_363.gdml
Step_364.gdml
Step_365.gdml
Step_366.gdml
Step_367.gdml
Step_394.gdml
Step_395.gdml
Step_396.gdml
Step_397.gdml
Step_398.gdml
Step_399.gdml
Step_400.gdml
Step_401.gdml
Step_402.gdml
Step_403.gdml
Step_404.gdml
Step_405.gdml
Step_406.gdml
Step_407.gdml
Step_408.gdml
Step_409.gdml
Step_410.gdml
Step_411.gdml
Step_438.gdml
Step_439.gdml
Step_440.gdml
Step_441.gdml
Step_442.gdml
Step_443.gdml
Step_444.gdml
Step_445.gdml
Step_446.gdml
Step_447.gdml
Step_448.gdml
Step_449.gdml
Step_450.gdml
Step_451.gdml
Step_452.gdml
Step_453.gdml
Step_454.gdml
Step_455.gdml
Step_482.gdml
Step_483.gdml
Step_484.gdml
Step_485.gdml
Step_486.gdml
Step_487.gdml
Step_488.gdml
Step_489.gdml
Step_490.gdml

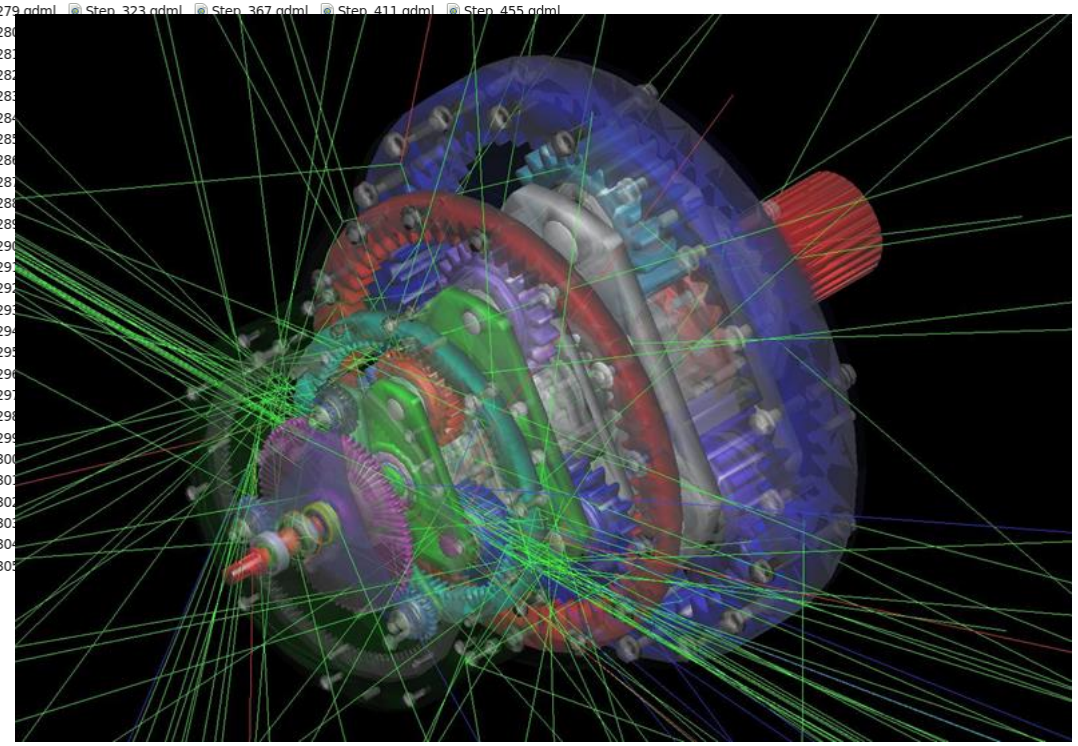

Example: Multiwire Proportional Chamber

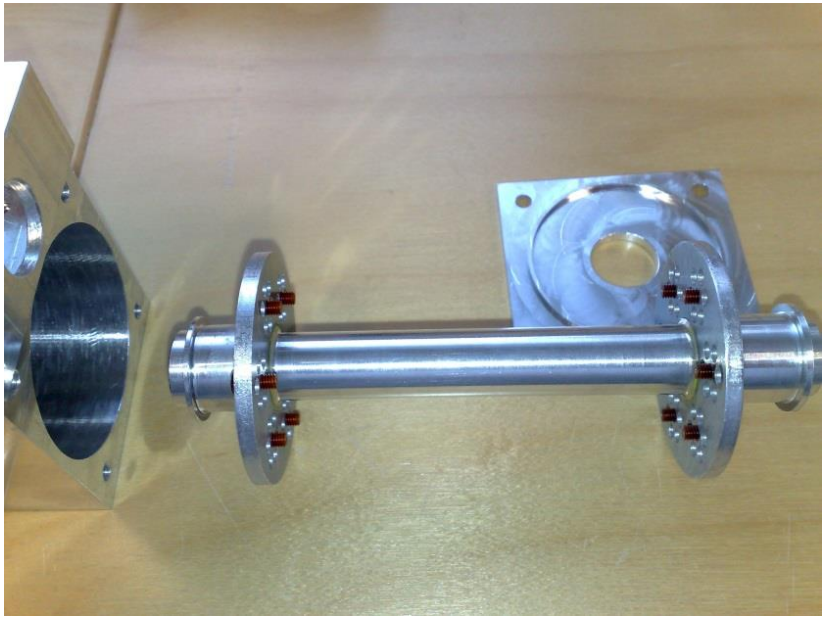

```
//....oooOOOOOooo........oooOOOOOooo........oooOOOOOooo........oooOOOOOooo......

G4VPhysicalVolume* ExN02DetectorConstruction::Construct()
{
    parser.Read(fReadFile);
    physiWorld = parser.GetWorldVolume();

    G4String fname = physiWorld->GetName();
        G4cout << fname << G4endl;

        G4LogicalVolume * flogical = physiWorld->GetLogicalVolume();
        G4int daughters = flogical->GetNoDaughters();
        G4cout << "Number of daughters " << daughters << G4endl;

    G4VPhysicalVolume * daughter[10];
    G4VSolid * solidDaughter[10];

    for (G4int i=0; i<daughters; i++)
    {
        G4cout << flogical->GetDaughter(i)->GetName() << G4endl;
        daughter[i] = flogical -> GetDaughter(i);
        solidDaughter[i] = daughter[i]->GetLogicalVolume()->GetSolid();
    }

    flogical->RemoveDaughter(daughter[0]);
    G4Tubs* aTube1 = new G4Tubs("Gas",0.,solidDaughter[0]->GetExtent().GetZmax(),solidDaughter[0]->GetExtent().GetXmax(),0*deg,360*deg);
//  G4ThreeVector positionTube1 = daughter[0]->GetFrameTranslation();
    G4ThreeVector positionTube1 = G4ThreeVector(0,0,0);
    G4LogicalVolume * dlogical = new G4LogicalVolume(aTube1,daughter[0]->GetLogicalVolume()->GetMaterial(),"Gas",0,0,0);
    G4RotationMatrix rm = G4RotationMatrix(0,0,0);
        rm.rotateY(90.*deg);
    daughter[0]=new G4PVPlacement(G4Transform3D(rm,positionTube1), dlogical, "Gas", flogical, false, 0);

    flogical->RemoveDaughter(daughter[2]);
    G4Wire* aWire = new G4Wire("Anode",solidDaughter[2]->GetExtent().GetZmax(),solidDaughter[2]->GetExtent().GetXmax(),5000.,50.);
    daughter[2]->GetLogicalVolume()->SetSolid(aWire);
    daughter[0]->GetLogicalVolume()->AddDaughter(daughter[2]);

// Note: 5080.0 V is the voltage and 50.0 grams is the tension meaning the weight (for the sag)
//  aWire1 = new G4Wire("muonTubeWire1", outerRadiusOfTheWire, HalftubeLength, 5080.0, 50.0);
```

Example: Multiwire Proportional Chamber