Status of Activities at CERN

EN/MME et al.

ENGINEERING
DEPARTMENT

Outline

- Helium tank
- HOM
  - Design
  - Fabrication
- Tests
- Alignment monitoring system
- EDMS

He Tank: design with bolts (tot 268)

- Thick welds produce unacceptable deformations of the tank (i.e. stress in the cavity)
- Thin welds reduce the stiffness too much (pressure determines high stress in the cavity)

- The use of bolts should avoid these problems

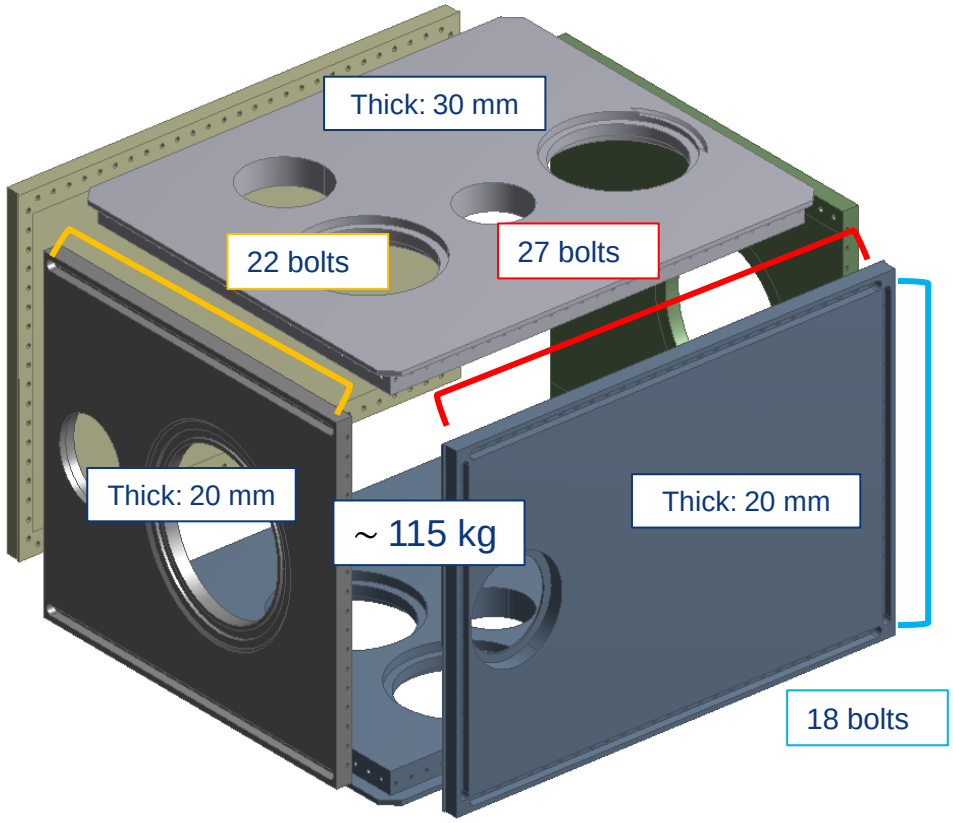

He tank: stress calculation

- Calculation according to VDI 2230
- Both FE and analytical
- 268xM6 Ti gr. 5

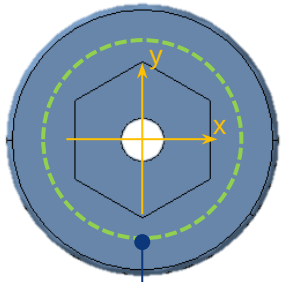

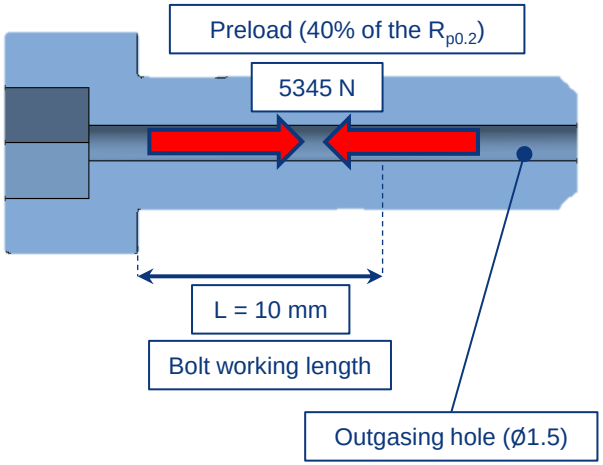

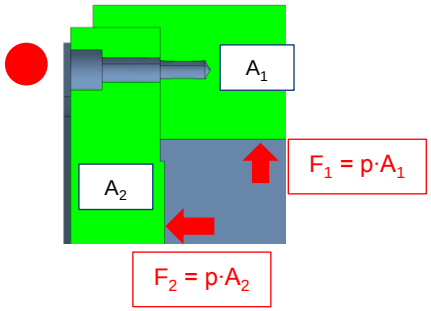

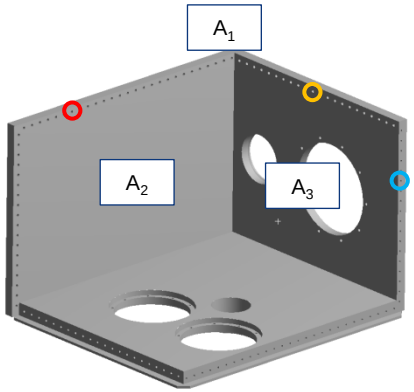

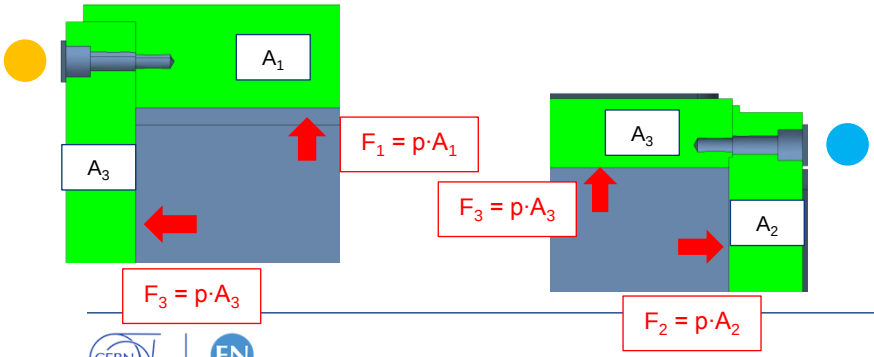

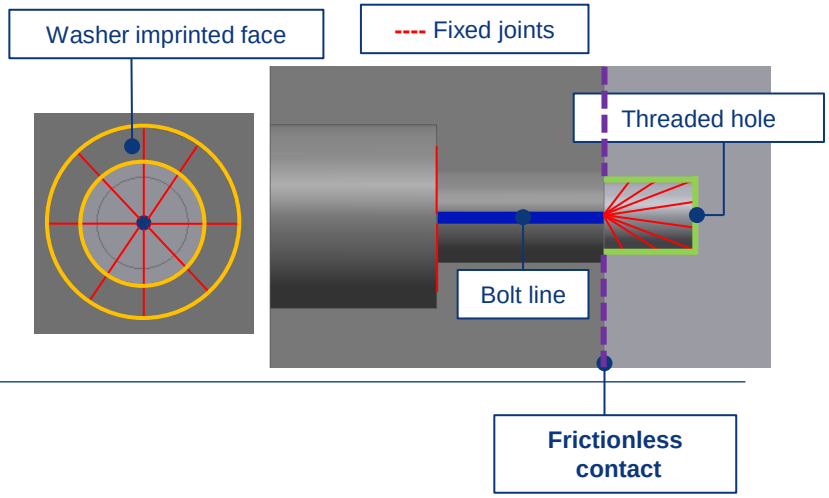

He tank: stress calculation

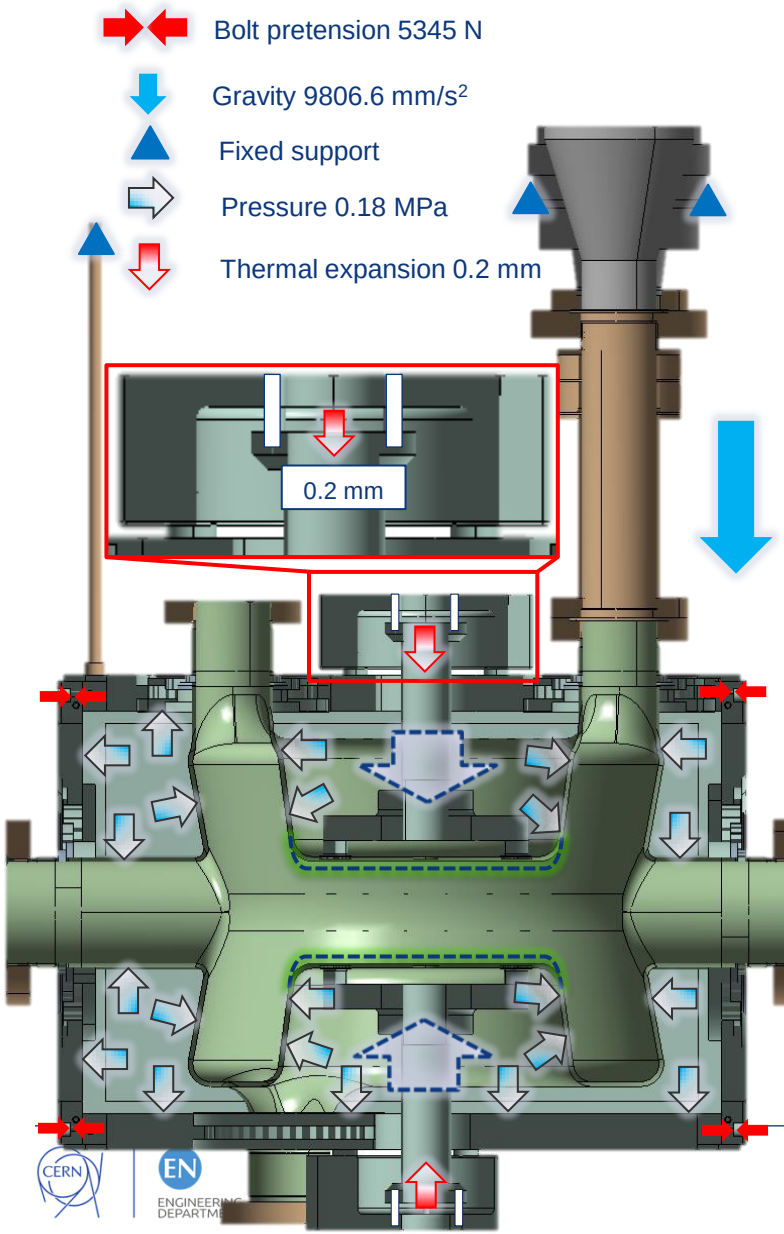

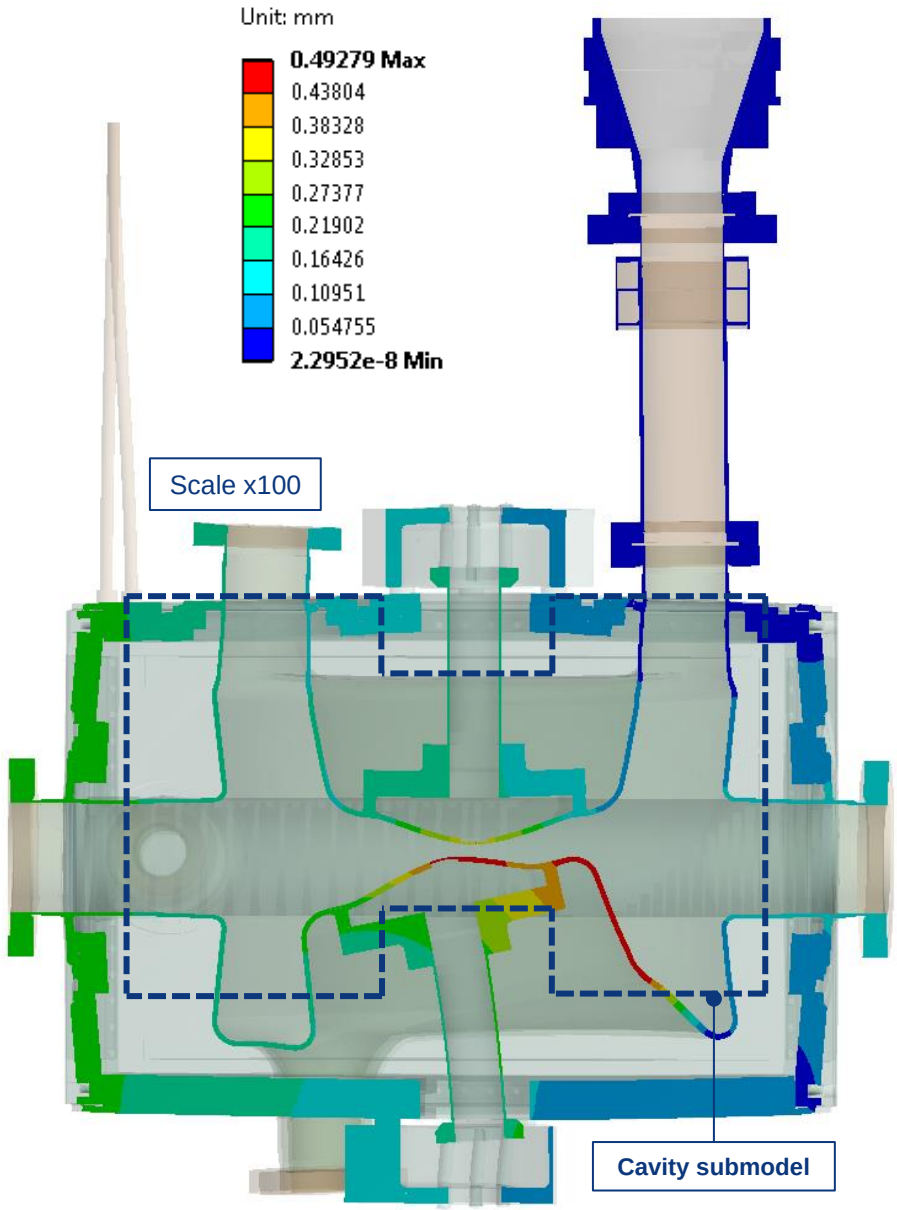

He tank:stress in the cavity (load cases)

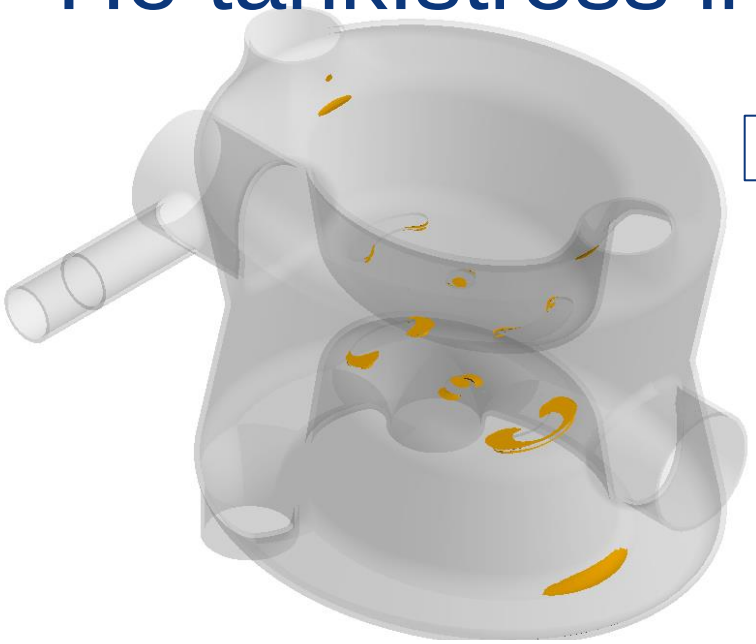

Pressure

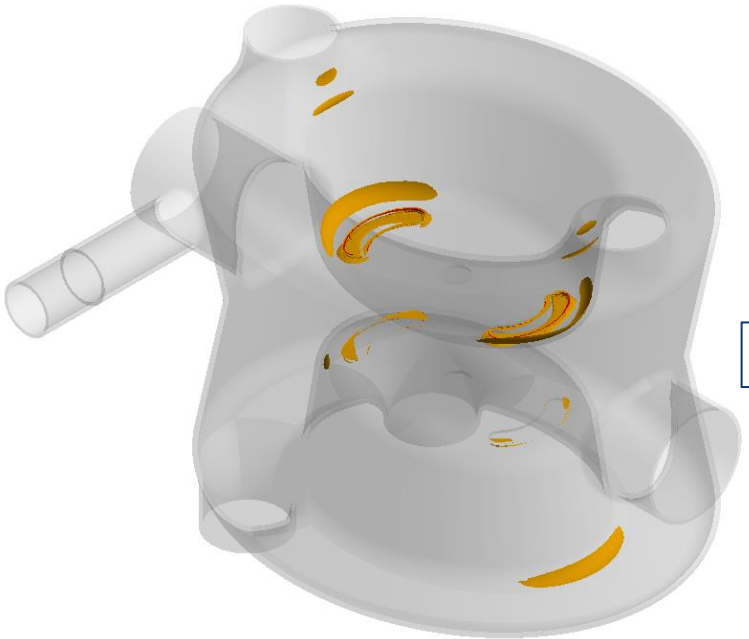

Pretuning

Stress > 75 MPa

50 MPa < Stress < 75 MPa

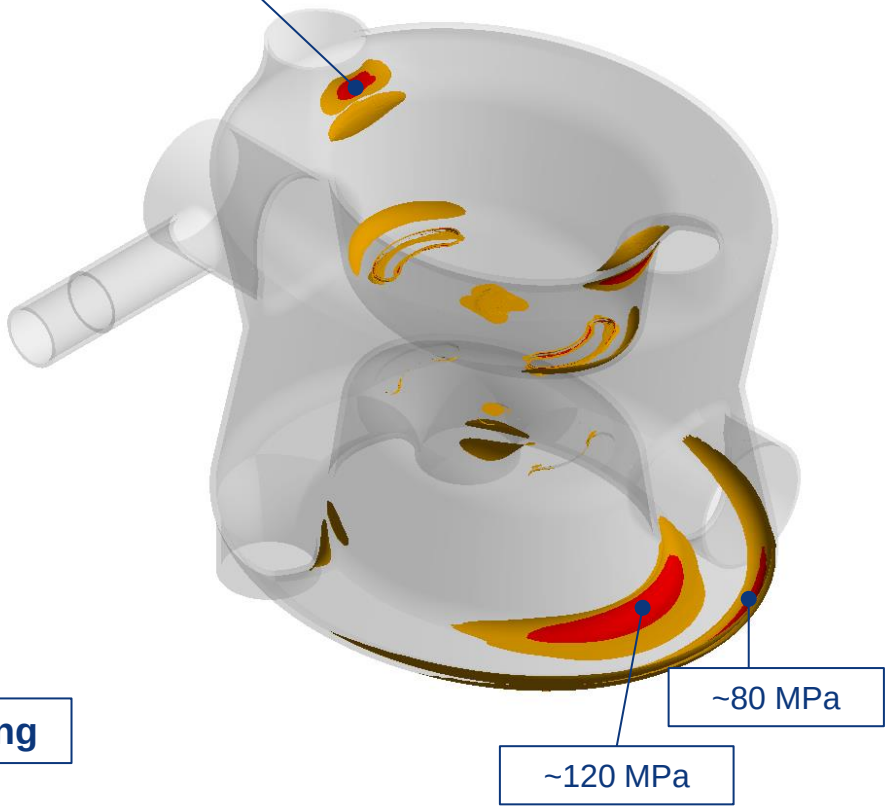

Pressure + Pretuning

Elastoplastic model (cavity)

65 MPa

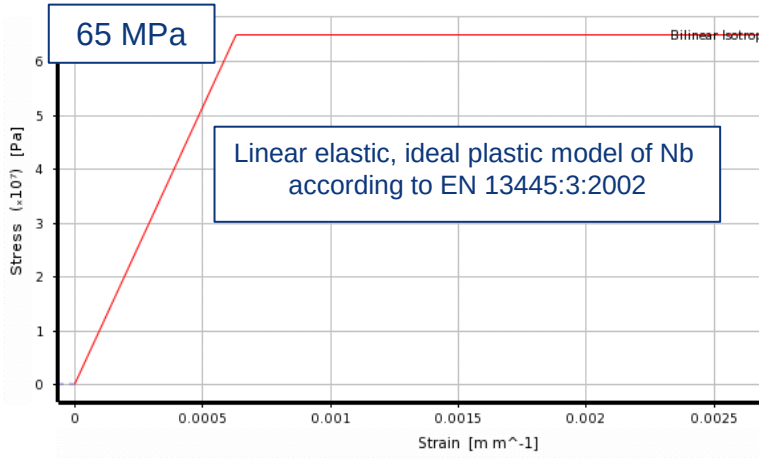

Linear elastic, ideal plastic model of Nb according to EN 13445:3:2002

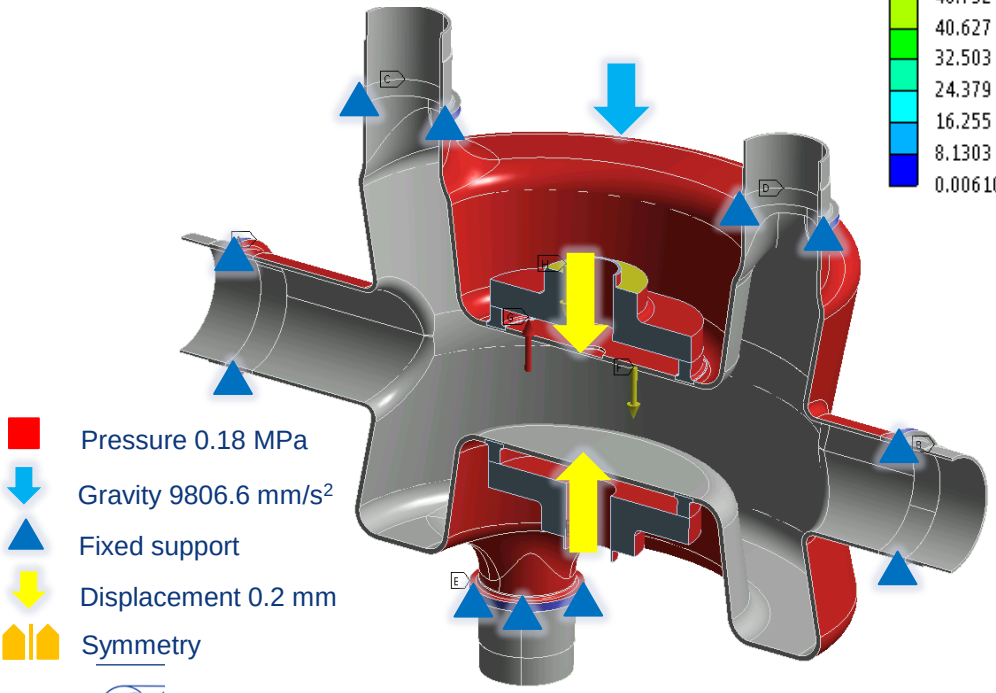

Pressure 0.18 MPa

Gravity 9806.6 mm/s^2

Fixed support

Displacement 0.2 mm

Symmetry

Simplified model of the cavity

B: Linear Elastic Ideal Plastic
Equivalent Stress
Type: Equivalent (von-Mises) Stress
Unit: MPa

74.804
65
56.876
48.752
40.627
32.503
24.379
16.255
8.1303
0.0061081

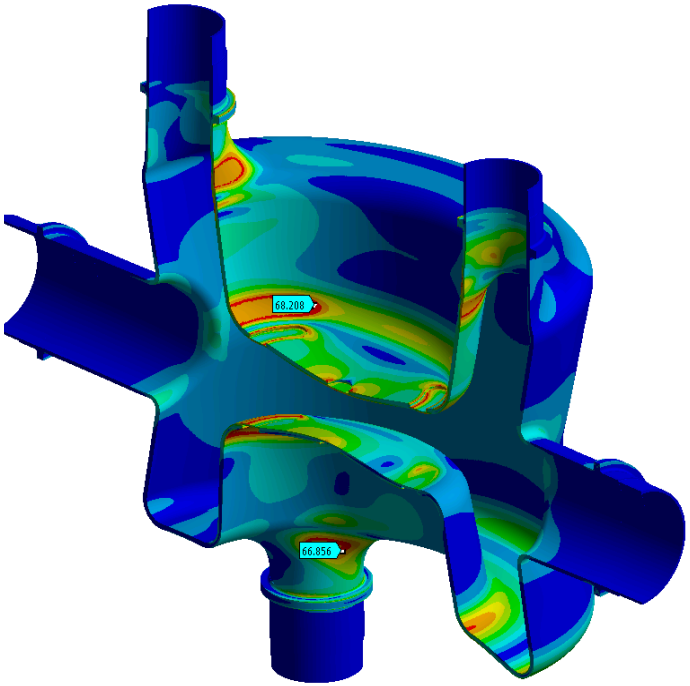

CERN | EN ENGINEERING DEPARTMENT

He tank: mass reduction

- Ti plates are thick (20-30 mm)
- Part of the material doesn't add anything to the stiffness
- Heavy parts (> 10 kg) are hard to handle

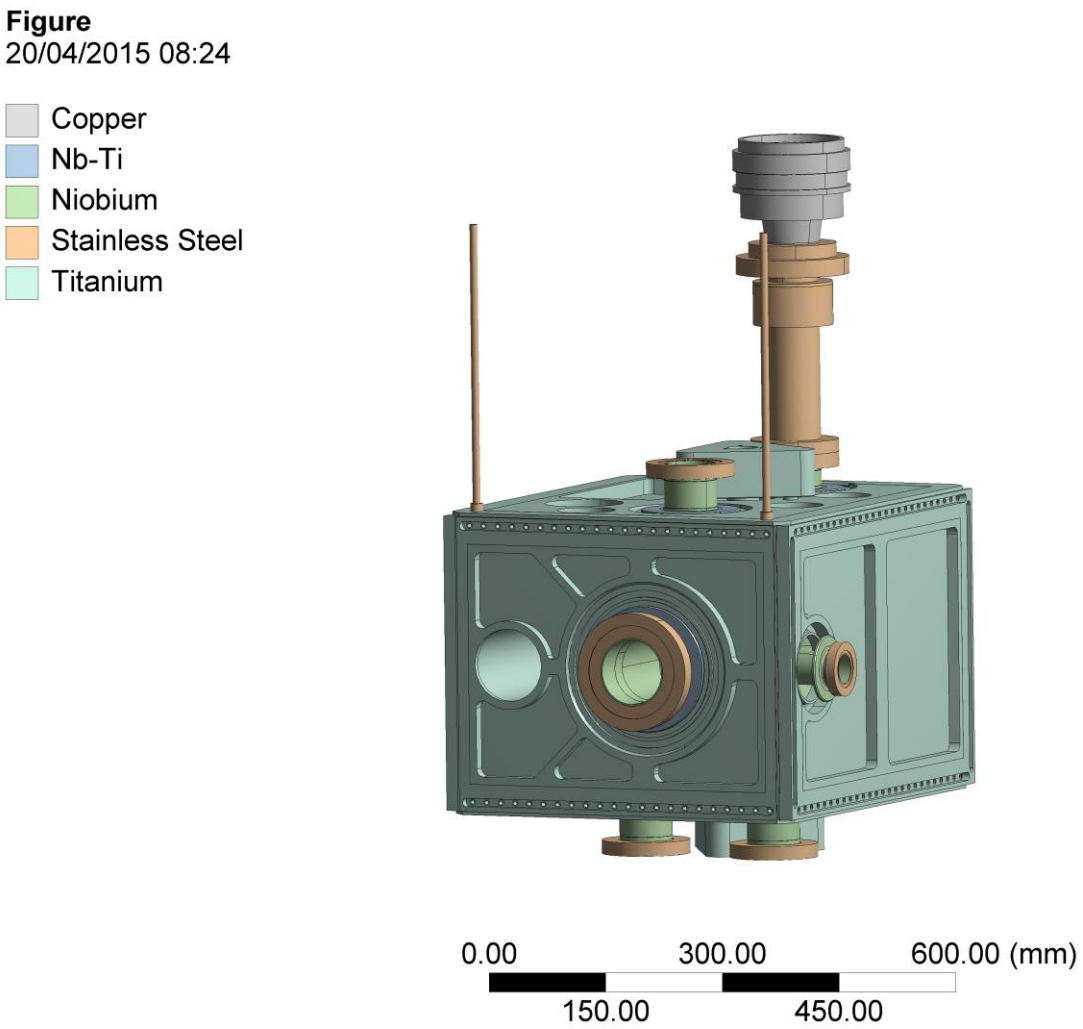

- ✓ Possible mass reduction of about 25 %
- ✓ Side plates become lighter than 10 kg

HOM: design

On-going:

- Weld design/shape validation
- Validation of measurability
- Few corrections to drawings
- Drawings validation (priority to bellows and flanges)
- Order bellows and flange material
- Nb order placed (7-10 weeks for shipping)

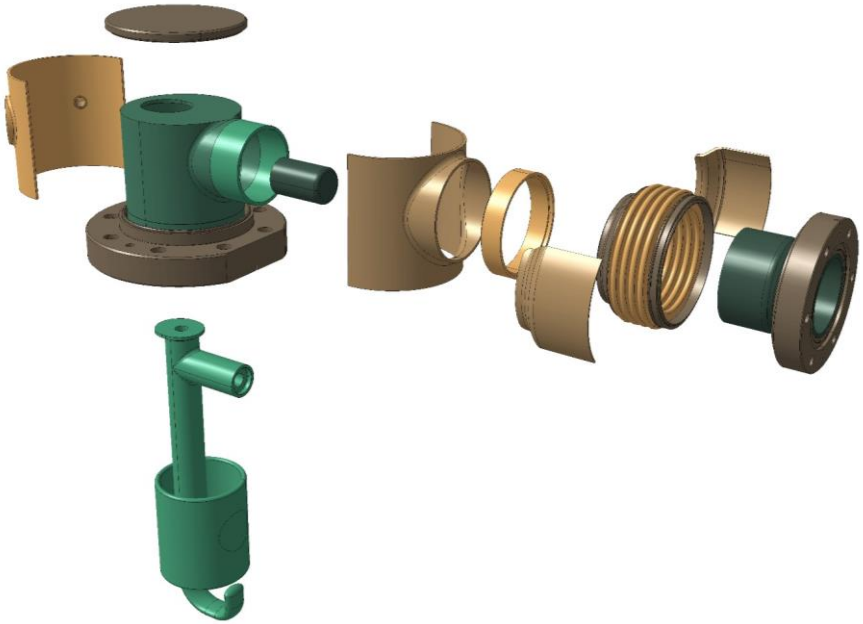

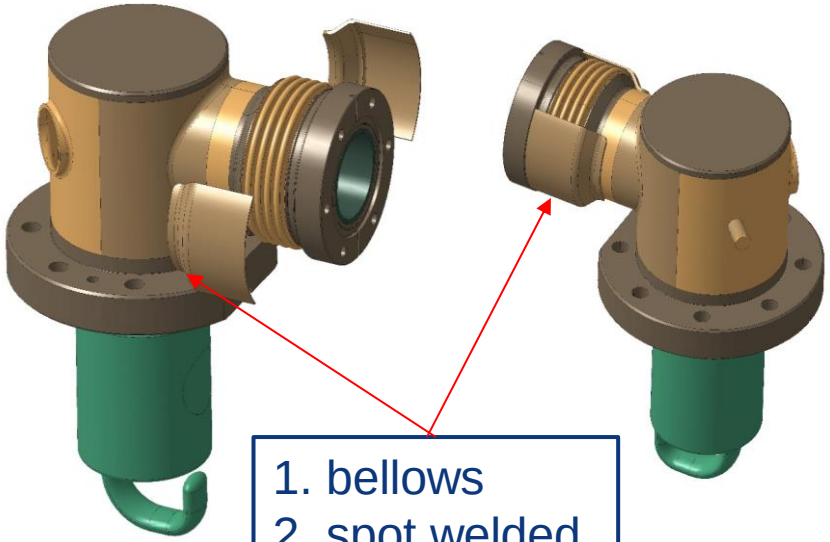

1. bellows
2. spot welded stiffeners

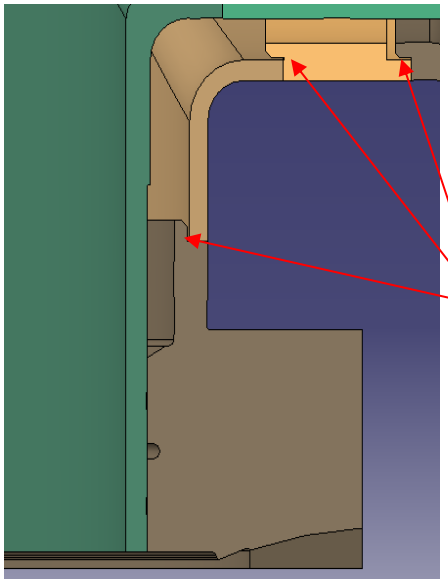

3. Nb protection (from EBW)

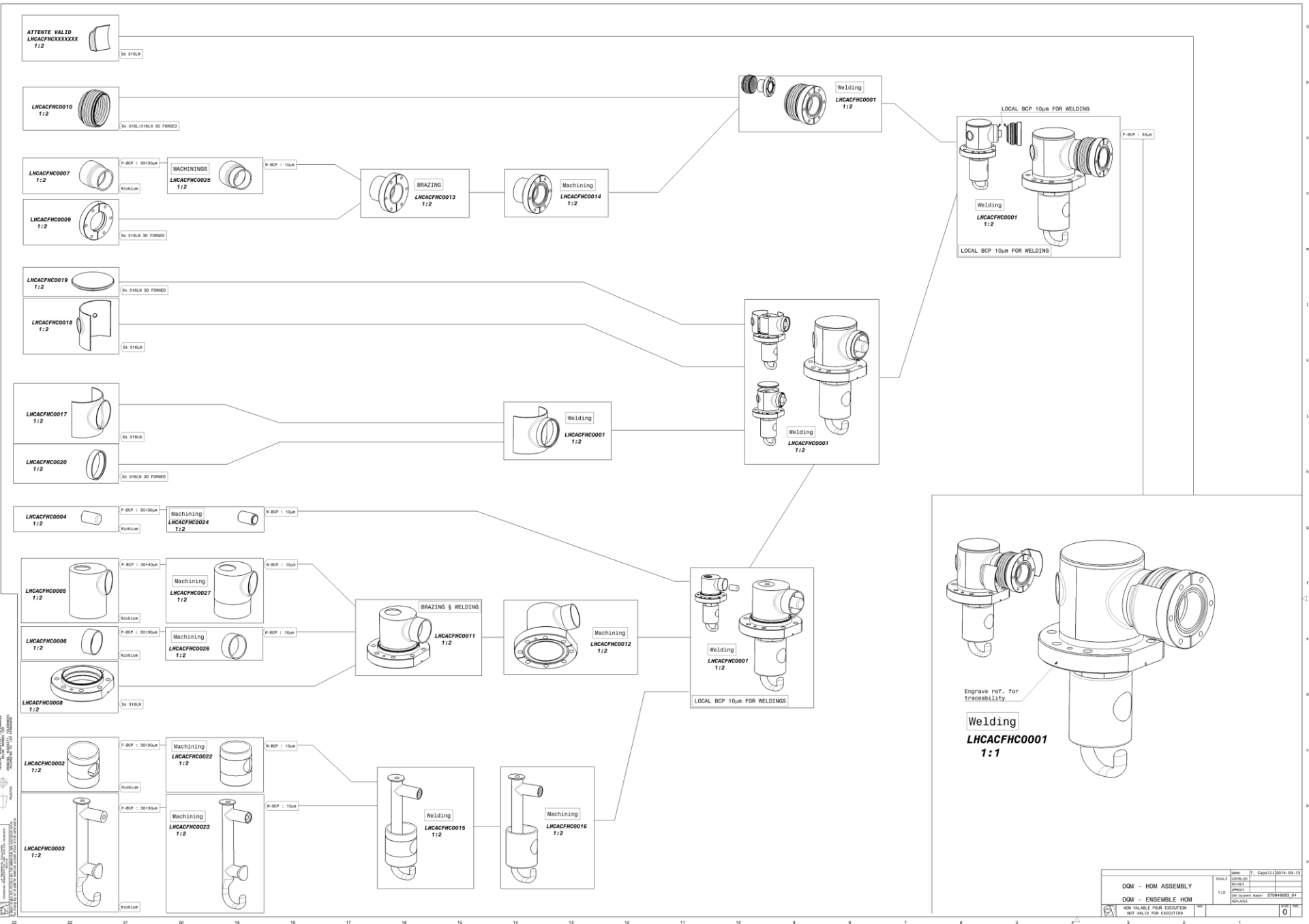
ATTENTE VALID
LHCACFHCXXXXXXX
1:2
Ss 316LN
LHCACFHC0010
1:2
Ss 316L/316LN 3D FORGED
LHCACFHC0007
1:2
P-BCP : 30+30µm
Niobium
MACHININGS
LHCACFHC0025
1:2
W-BCP : 10µm
LHCACFHC0009
1:2
Ss 316LN 3D FORGED
BRAZING
LHCACFHC0013
1:2
Machining
LHCACFHC0014
1:2
Welding
LHCACFHC0001
1:2
LOCAL BCP 10µm FOR WELDING
F-BCP : 30µm
Welding
LHCACFHC0001
1:2
LOCAL BCP 10µm FOR WELDING
LHCACFHC0019
1:2
Ss 316LN 3D FORGED
LHCACFHC0018
1:2
Ss 316LN
LHCACFHC0017
1:2
Ss 316LN
LHCACFHC0020
1:2
Ss 316LN 3D FORGED
Welding
LHCACFHC0001
1:2
Welding
LHCACFHC0001
1:2
LHCACFHC0004
1:2
P-BCP : 30+30µm
Niobium
Machining
LHCACFHC0024
1:2
W-BCP : 10µm
LHCACFHC0005
1:2
P-BCP : 30+30µm
Niobium
Machining
LHCACFHC0027
1:2
W-BCP : 10µm
LHCACFHC0006
1:2
P-BCP : 30+30µm
Niobium
Machining
LHCACFHC0026
1:2
W-BCP : 10µm
LHCACFHC0008
1:2
Ss 316LN
BRAZING § WELDING
LHCACFHC0011
1:2
Machining
LHCACFHC0012
1:2
Welding
LHCACFHC0001
1:2
LOCAL BCP 10µm FOR WELDINGS
LHCACFHC0002
1:2
P-BCP : 30+30µm
Niobium
Machining
LHCACFHC0022
1:2
W-BCP : 10µm
LHCACFHC0003
1:2
P-BCP : 30+30µm
Niobium
Machining
LHCACFHC0023
1:2
W-BCP : 10µm
Welding
LHCACFHC0015
1:2
Machining
LHCACFHC0016
1:2
Engrave ref. for traceability
Welding
LHCACFHC0001
1:1
DQW - HOM ASSEMBLY
DQW - ENSEMBLE HOM
SCALE
1:2
DRAWN
T. Capelli
2015-03-13
CONTROLLED
RELEASED
APPROVED
CAD Document Number
ST0649083_04
REPLACES
NON VALABLE POUR EXECUTION
NOT VALID FOR EXECUTION
SIZE
0
SHEET
DWG.

HOM: stress validation

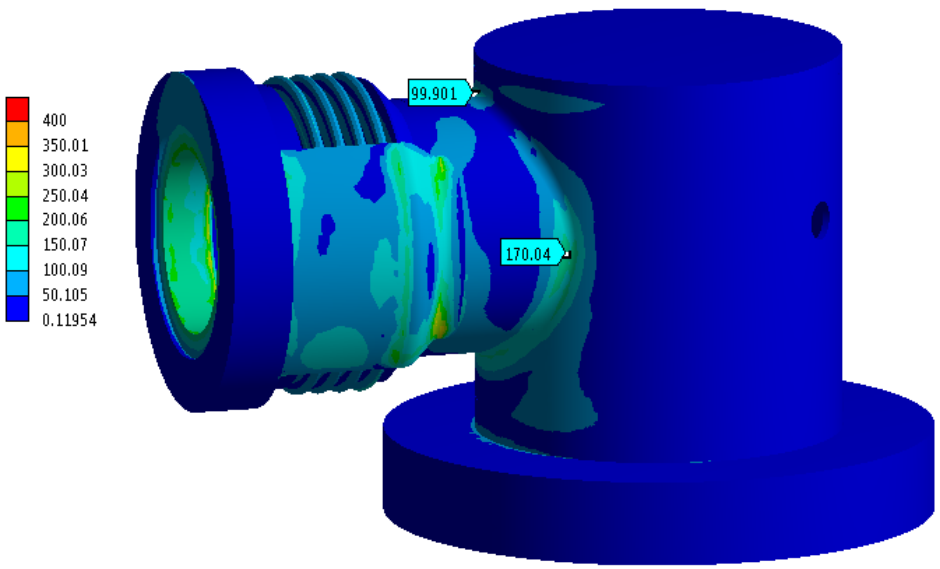

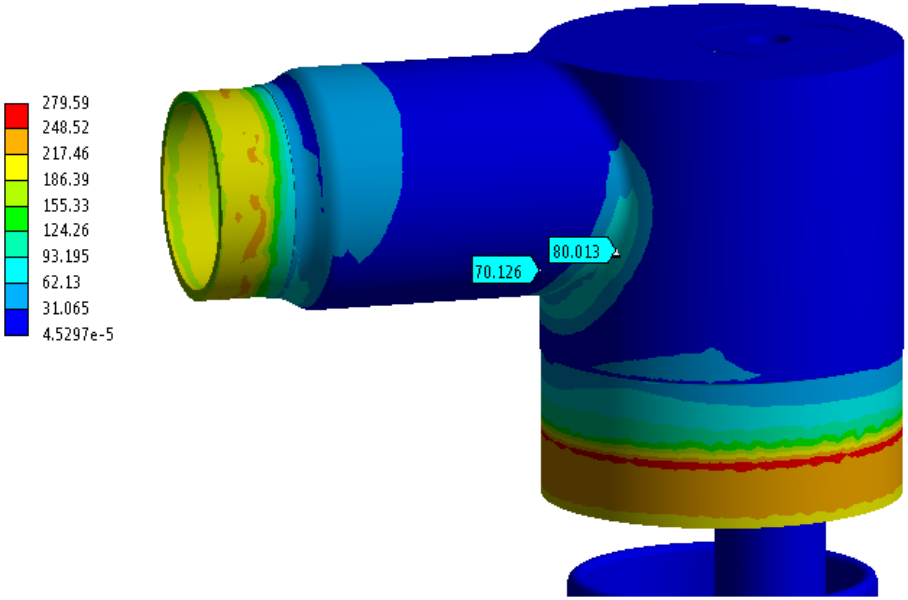

Non-standard welds calculation				
Max at 2K [MPa], Strength: 570 MPa				
mesh [mm]	1	0.5	0.3	0.1
weld 1	121	132	156	190
2	230	242	296	402
3	124	122	112	139
4	189	205	236	338
5	53	56	64	76
Max at 300K [MPa], Strength: 213 MPa				
mesh [mm]	1	0.5	0.3	0.1
weld 1	23	26	31	37
2	31	34	43	55
3	21	18	19	26
4	62	76	81	115
5	15	15	18	22

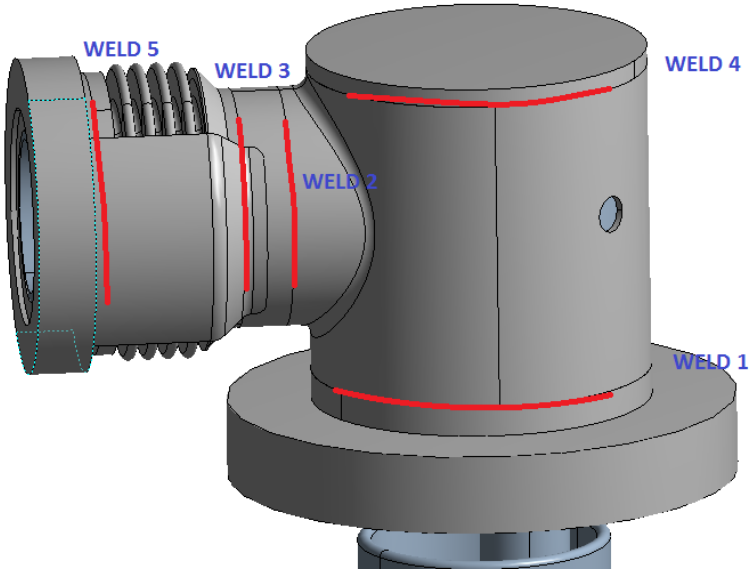

Tests: material samples

- N21: Niobium Thickness 3mm to beam tube — Ok
- N22: Niobium Thickness 4mm to cavity — Ok
- N27: Niobium-Titanium Thickness 25mm to beam tube — Ok
- H8: Niobium Rod Thickness 16mm to beam tube — No

(material is not annealed)

On-going: hardness measurements → assess properties of not annealed material after brazing.

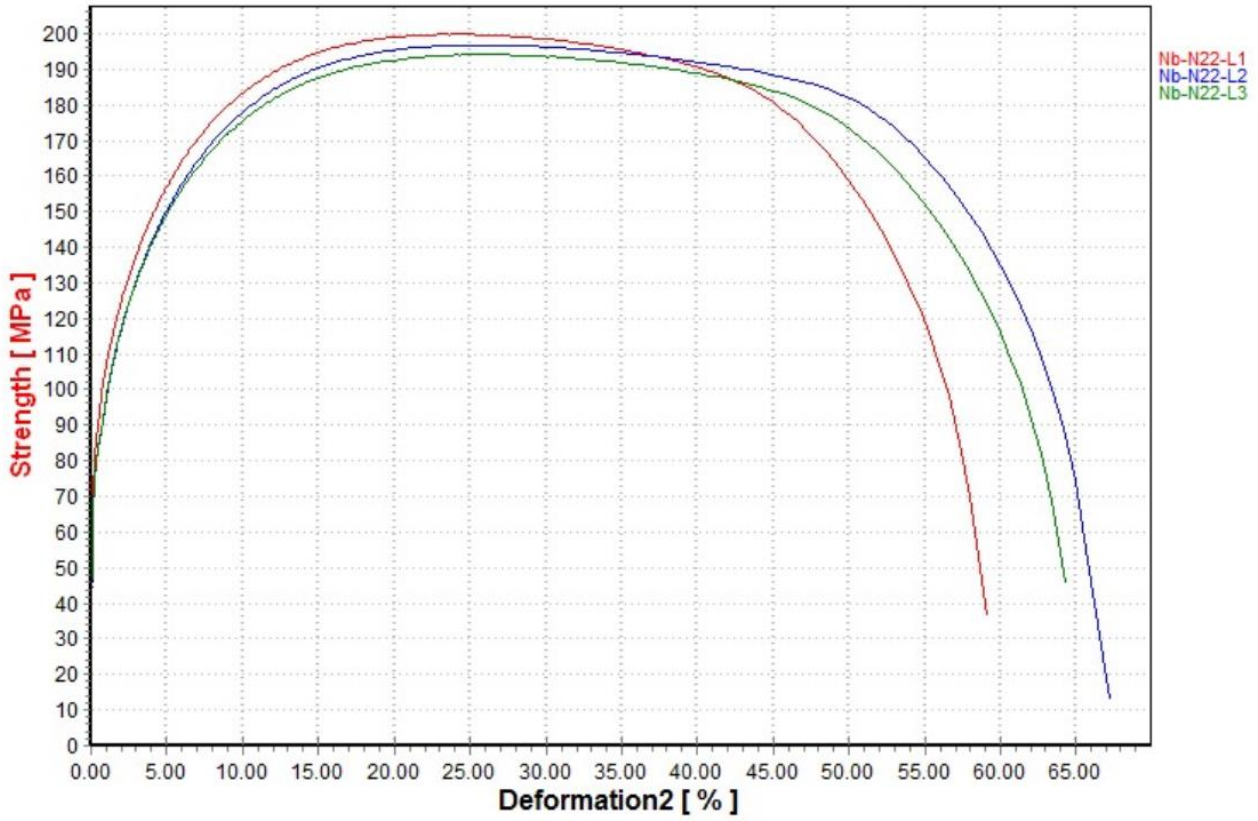

Tests: Visual, Radiographic and Metallographic

- NWV-EBW-001: Nb - Nb Thickness 3mm, welded by 1 side
- NWV-EBW-002: Nb - Nb Thickness 3mm, welded by 2 sides
- NWV-EBW-003: Nb - Nb Thickness 4mm, welded by 1 side
- NWV-EBW-004: Nb - Nb Thickness 4mm, welded by 2 sides
- NWV-EBW-005: Nb - Ti Thickness 6.5mm, welded by 2 sides

OK: no Volumetric defects

Not compliant with table 6 of the Engineering Specification for RF restrictions.

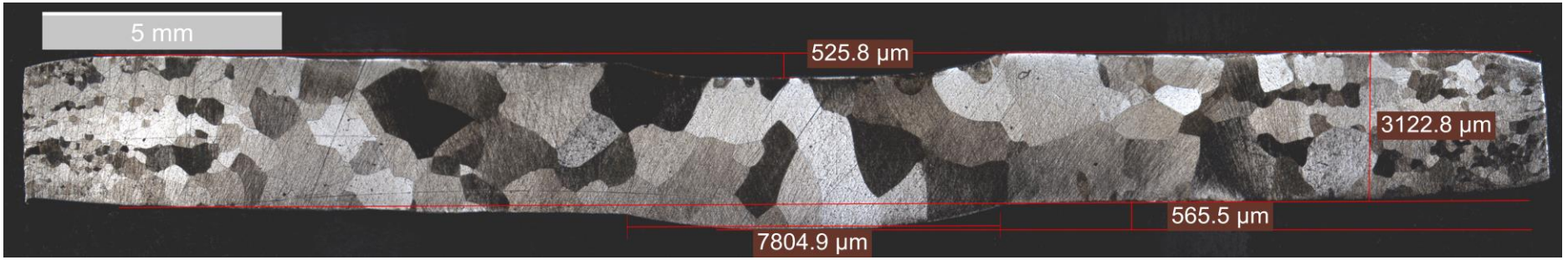

Tests: Beam Tube

- Vacuum Leak Test before and after Thermal Shocks – OK
  - Procedure according to EN 13185
  - 5 Thermal Shocks in liquid nitrogen performed to asses the possible evolution of brazing defects.
- *All welds and brazed joints were successfully tested at a background of $1.0x10^{-10}$mbarl/s, there was no evidence of leaks.*

- Ultrasonic by immersion on brazing part – OK
  - Procedure according to ASTM E1001
- *Defects were **NOT** found*

Tests: Beam Tube

- Radiographic test on all welds – OK
  - *Defects were **NOT** found*
    - Acceptance criteria according to EN ISO 13919-2 level B specified in our Engineering Specification.

- Dimensional control - **NO**
  - Some dimensions are **not compliant** with spec tolerances
  - Most relevant tolerances **not achieved**: parallelism between flange and NbTi ring, and diameter of the ring
    - ***Re-machining** needed after welding*

- **On-going** destructive tests:
  - Hardness
  - Metallographic

Alignment Monitoring System: BCAM*

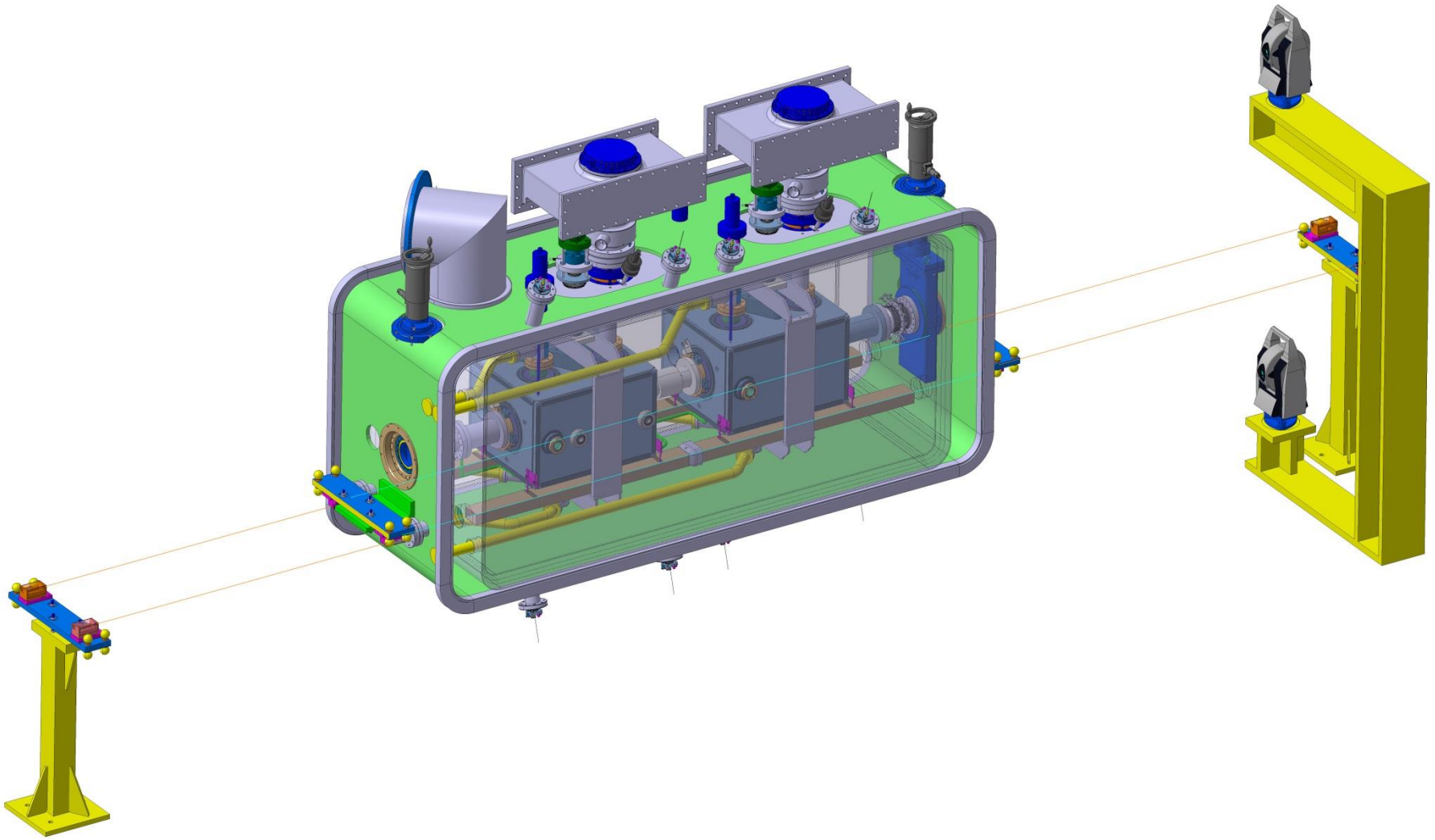

CERN | EN ENGINEERING DEPARTMENT

*Brandeis CCD Angle Monitor

Alignment Monitoring System: BCAM

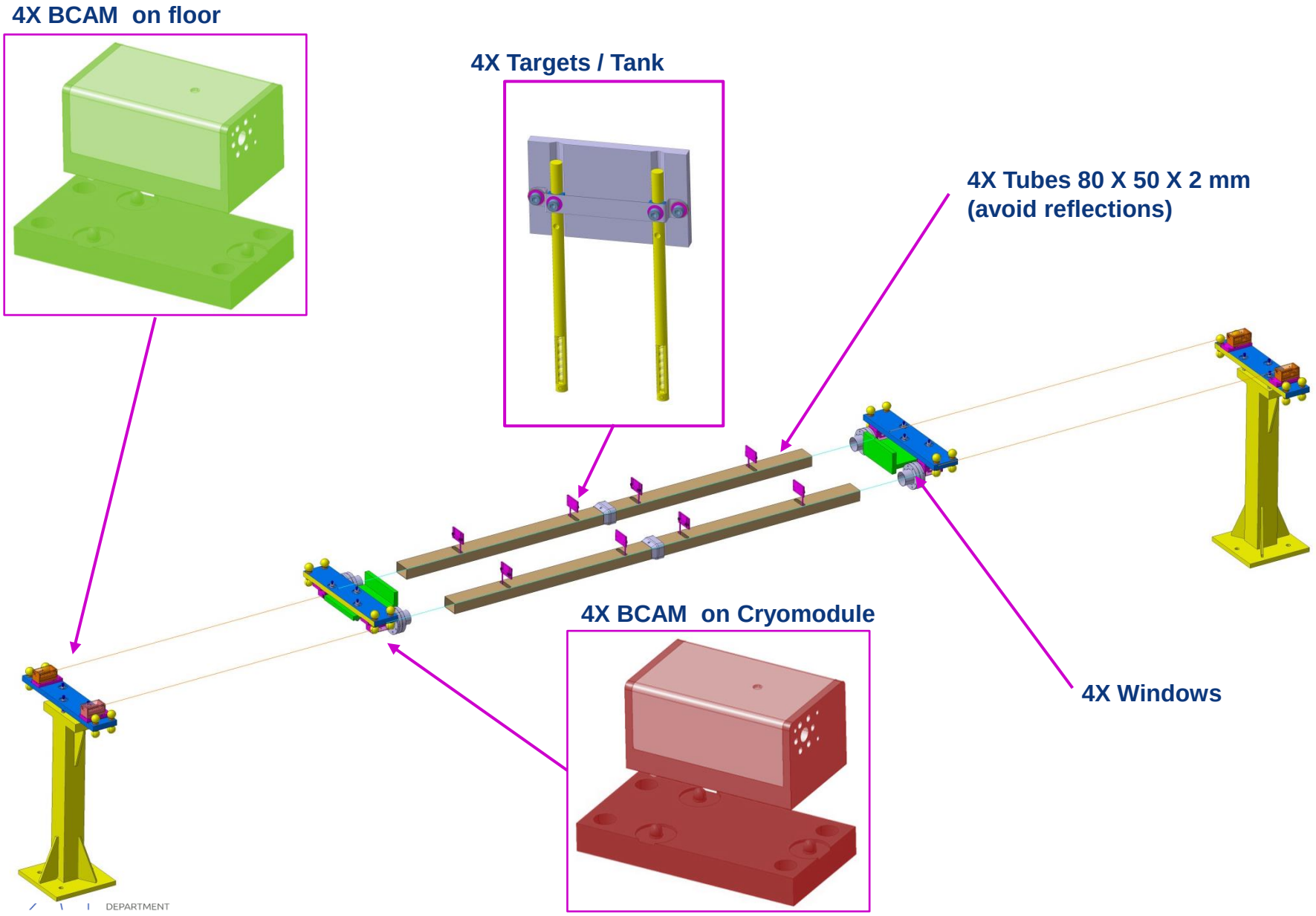

Alignment Monitoring System: BCAM

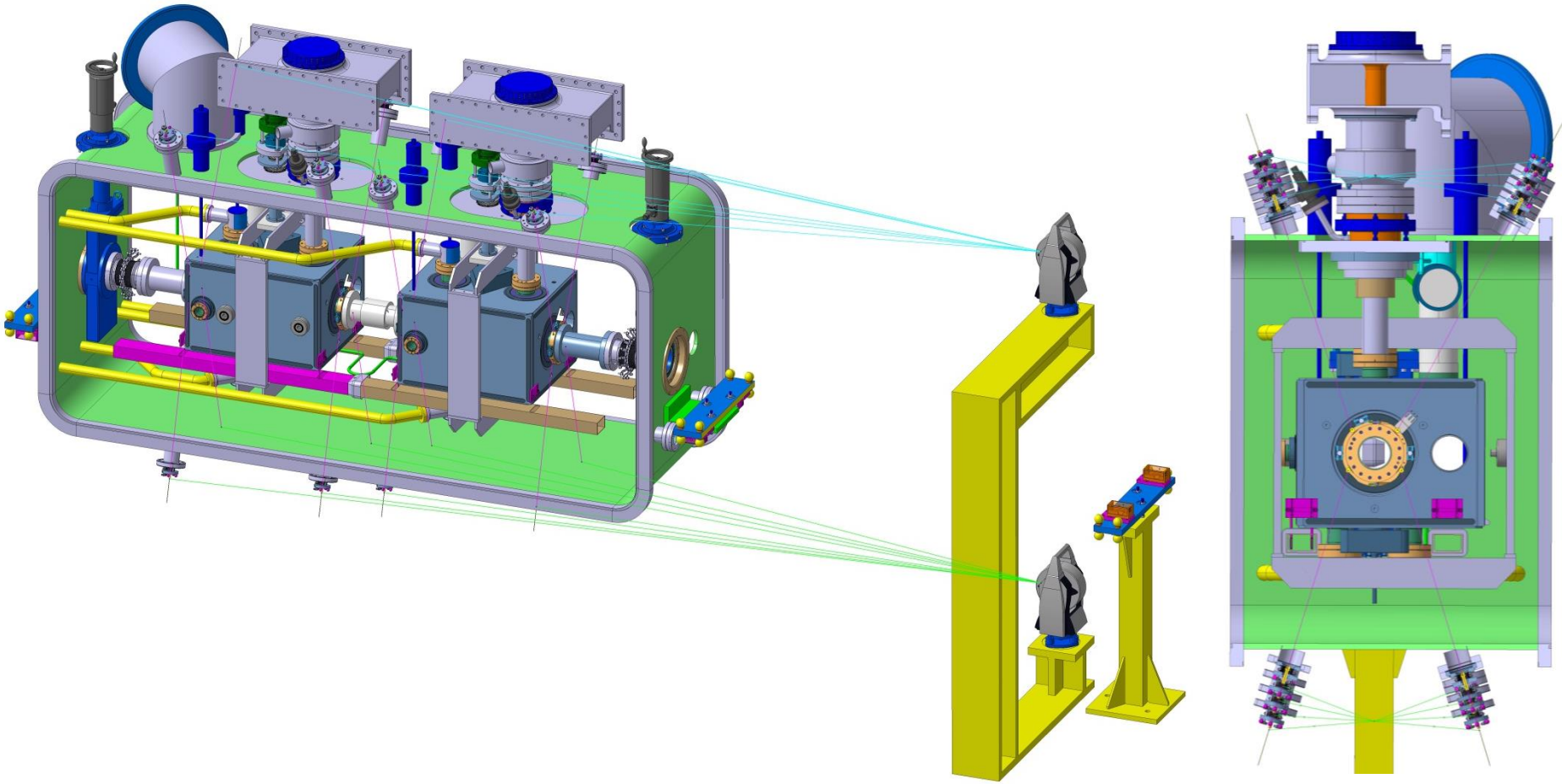

Alignment Monitoring System: FSI*

4X targets on flanges (4 Flanges)

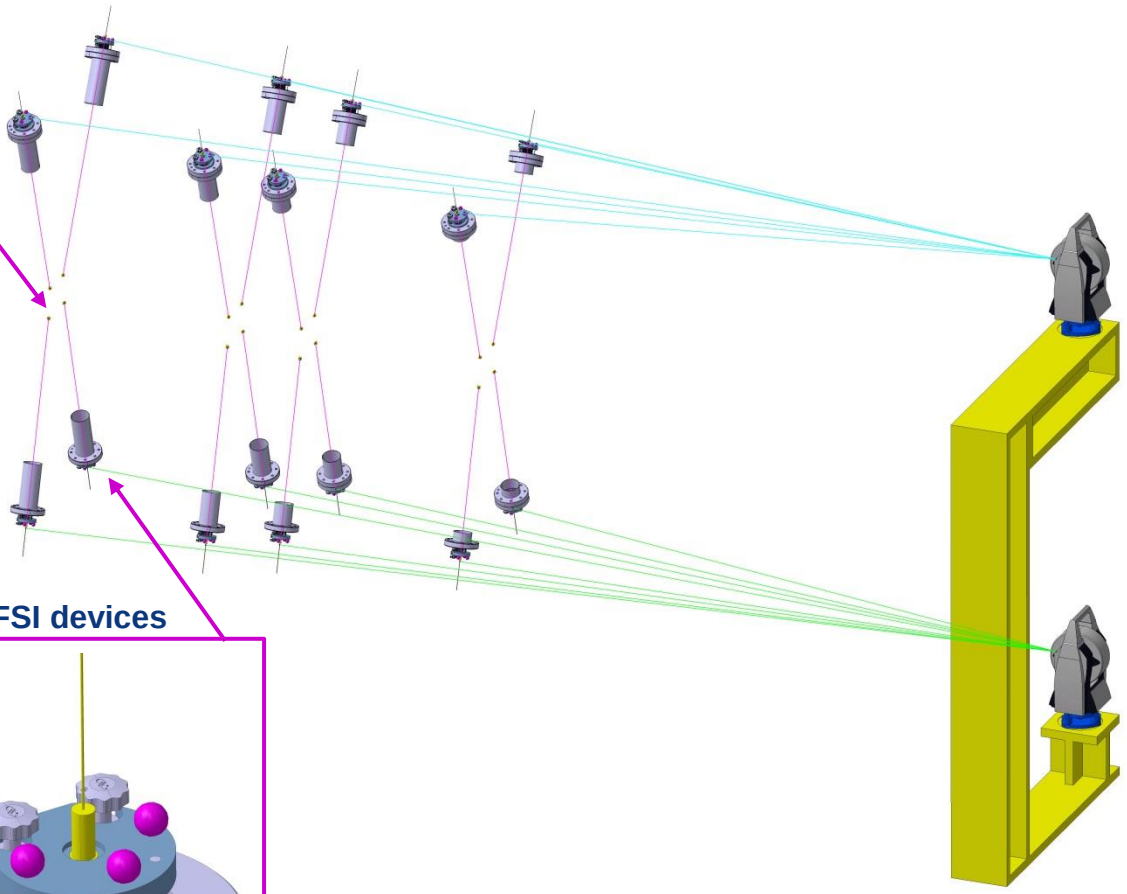

AT 401 Device (2 positions)

16X FSI devices

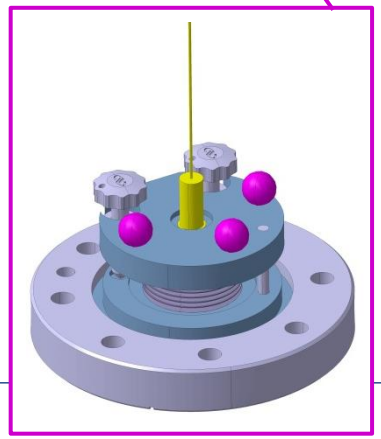

*Frequency Scanning Interferometry

SPS: parking

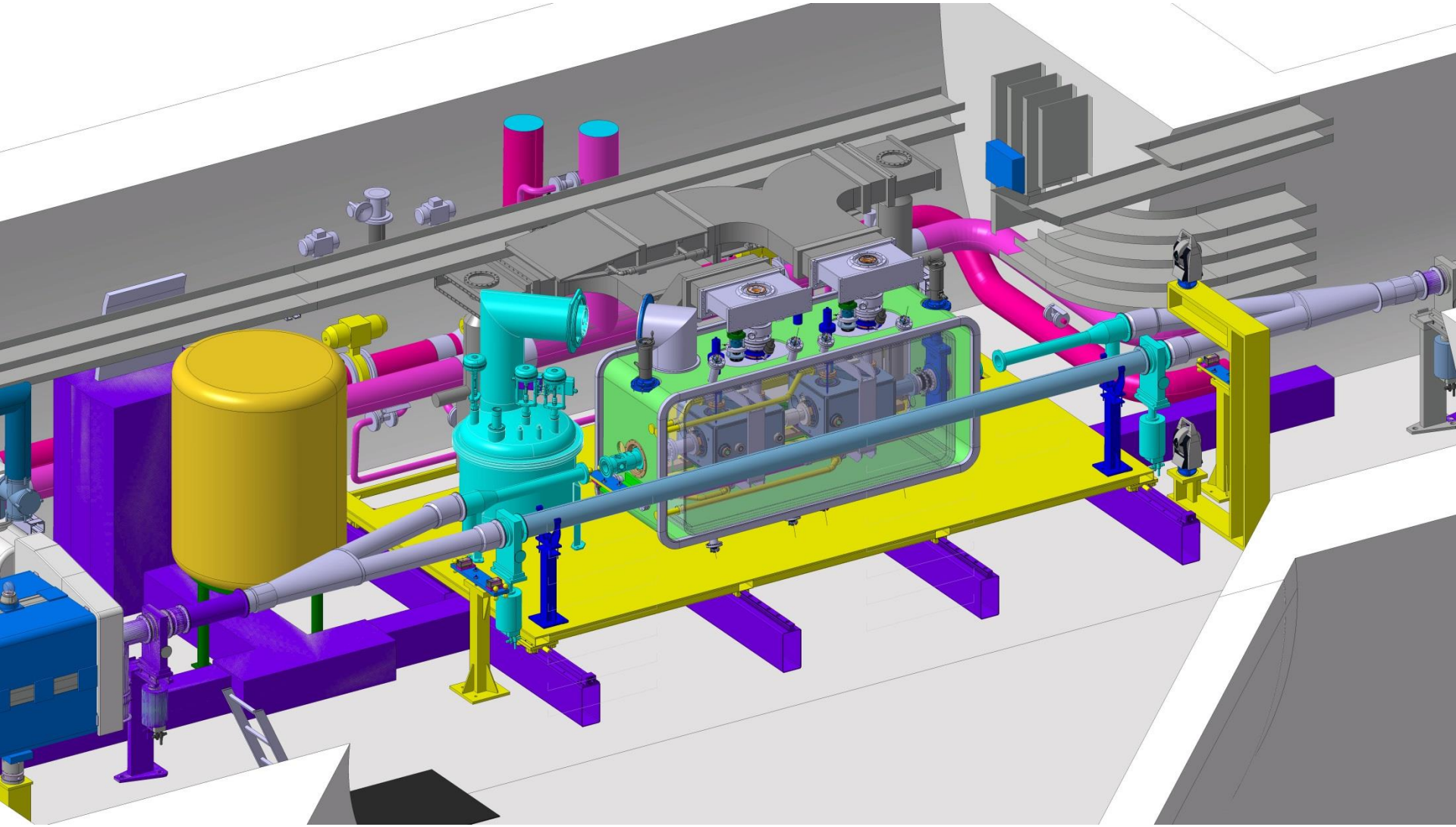

SPS: operation

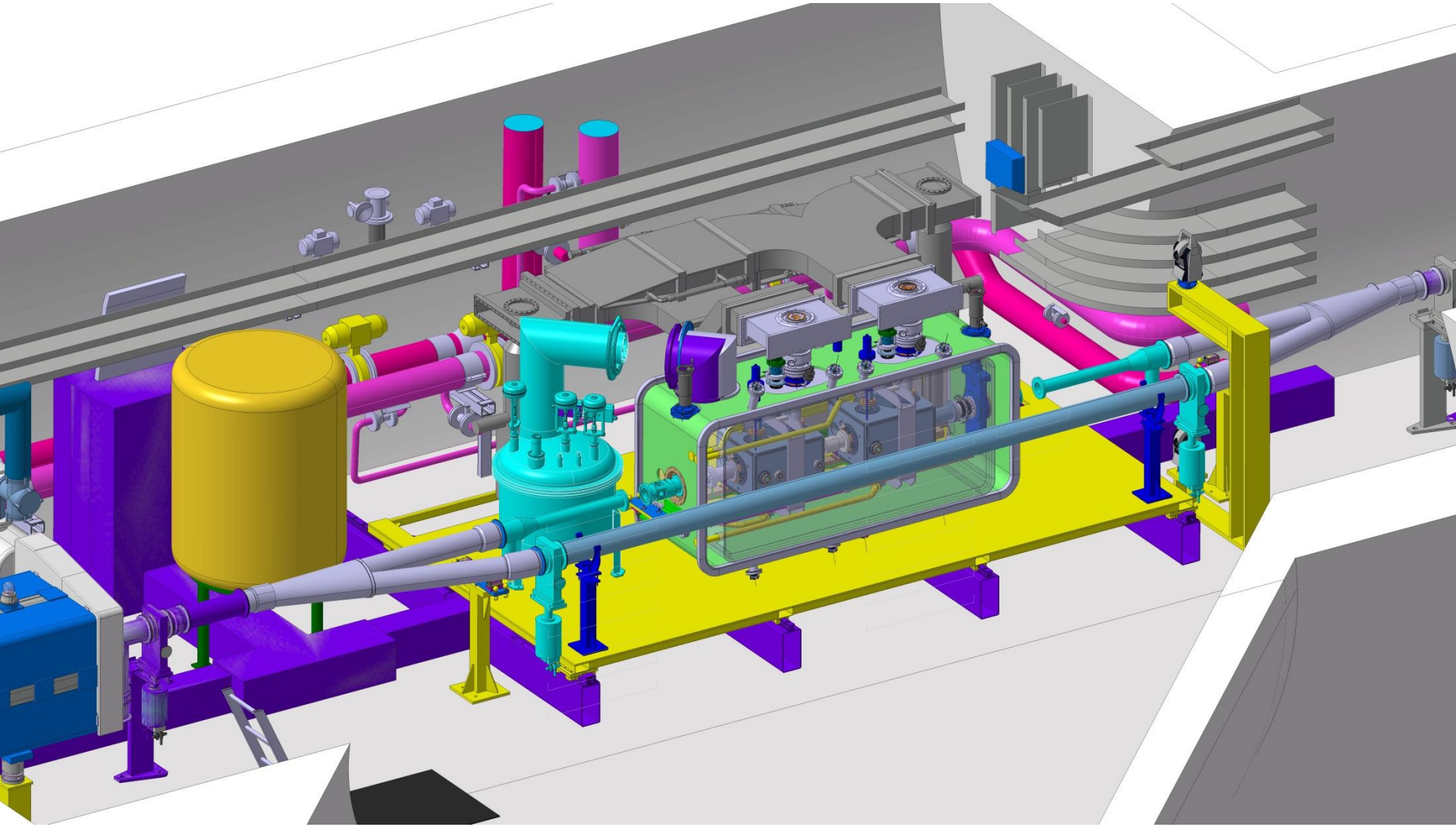

EDMS

- use the *obsolete* function
- use clear names
- describe the content

- new structure foreseen

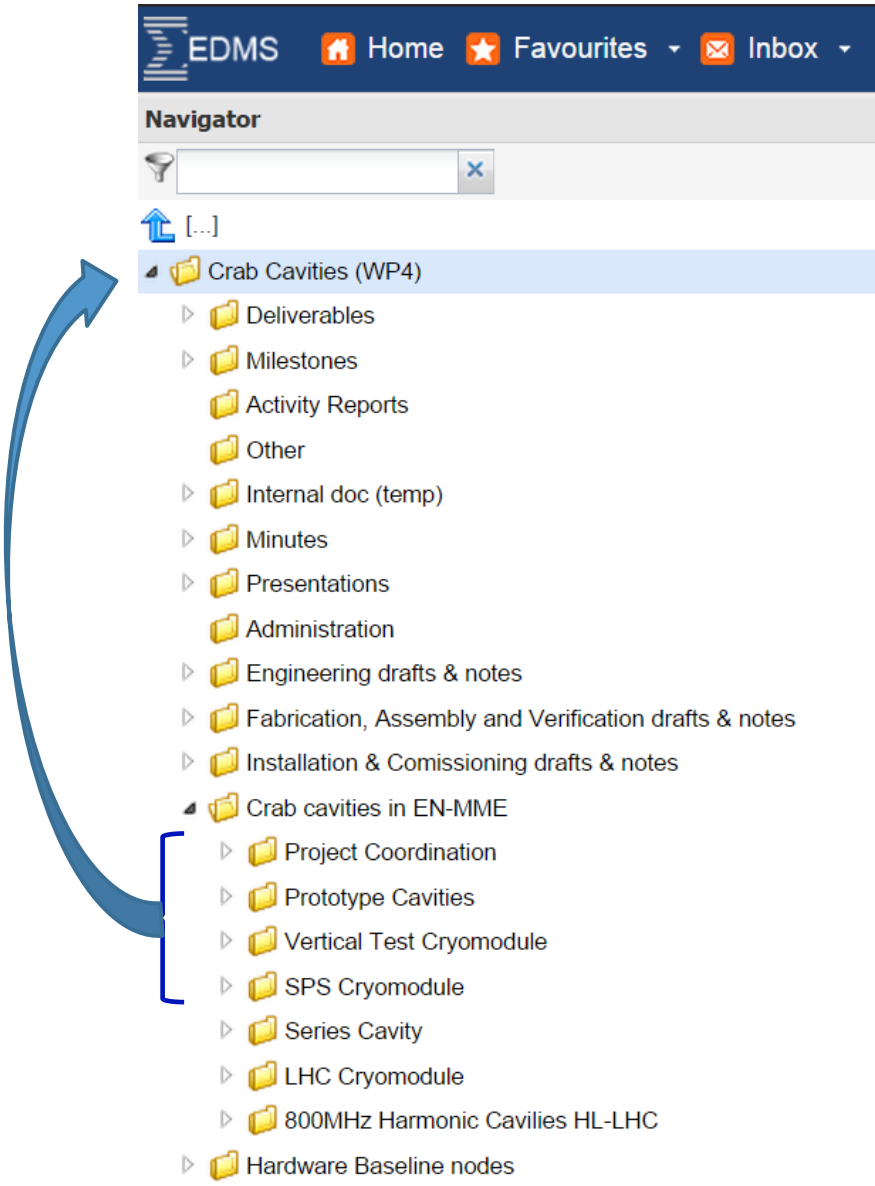

CERN
EN
ENGINEERING
DEPARTMENT