“Research and Development for the ATLAS Forward Calorimetry at the Phase-II LHC”

A.Cheplakov (JINR, Dubna),
on behalf of the ATLAS Liquid Argon Calorimeter Group

DUBNA

Alexander.Cheplakov@cern.ch

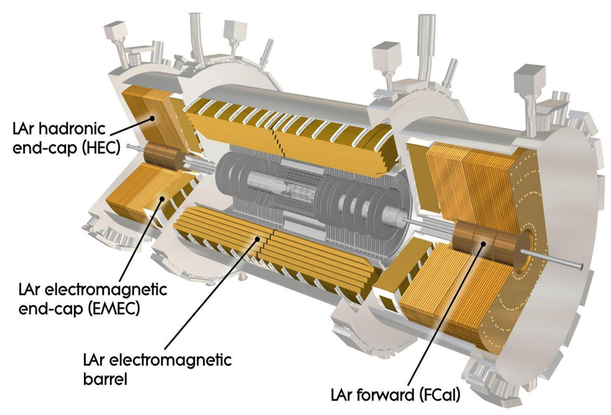

ATLAS Detector - the general-purpose apparatus at the LHC designed for studying of pp-collisions at the centre-of-mass energy of **14 TeV** and instantaneous luminosity of **10^{34} cm^{-2}s^{-1}**. The calorimeter played a major role in the discovery of the Higgs boson. Precision measurements of the Higgs properties and SUSY searches should be performed at **Phase-II LHC** which will run at 5-7 times higher luminosity aiming to provide statistics of 3000fb^{-1} by 2037. Performance of the calorimeter systems which comprise the liquid argon electromagnetic, hadronic (HEC) and forward (FCal) sub-systems, should be maintained at the highest luminosity of the HL-LHC corresponding to 200 pp collisions per beam-crossing. Although a number of studies have confirmed that the intrinsically radiation hard LAr technology will operate at the HL-LHC, the calorimeter upgrade program is proposed to deal with the expected challenges and to maximize the physics performance and discovery potential of the experiment.

The upgrade program includes a new Liquid Argon Forward Calorimeter (**sFCal**), with higher granularity and smaller electrode gaps, with improved cooling to reduce the impact of the very high instantaneous luminosity at Phase-II LHC. It can lead to space-charge effects from **ion-buildup** in the LAr gap, as well as large reductions in the voltage on the electrodes, and finally to potential over-heating (even local boiling) in the LAr. The scenario also includes a finely segmented **Si-based preshower** layer (HGTD) with precision time resolution covering approximately the η-range 2.4 < |η|< 4.0, in order to assign charged particles to different collision vertices and to mitigate pile-up effects in energy reconstruction. The **readout electronics** need to be upgraded because of radiation tolerance limits, lifetime, and because the on-detector front-end electronics can not operate with the Level-0 and Level-1 trigger rates and latencies required for the Phase-II LHC luminosities.

Promising first simulation results for high-granularity sFCal

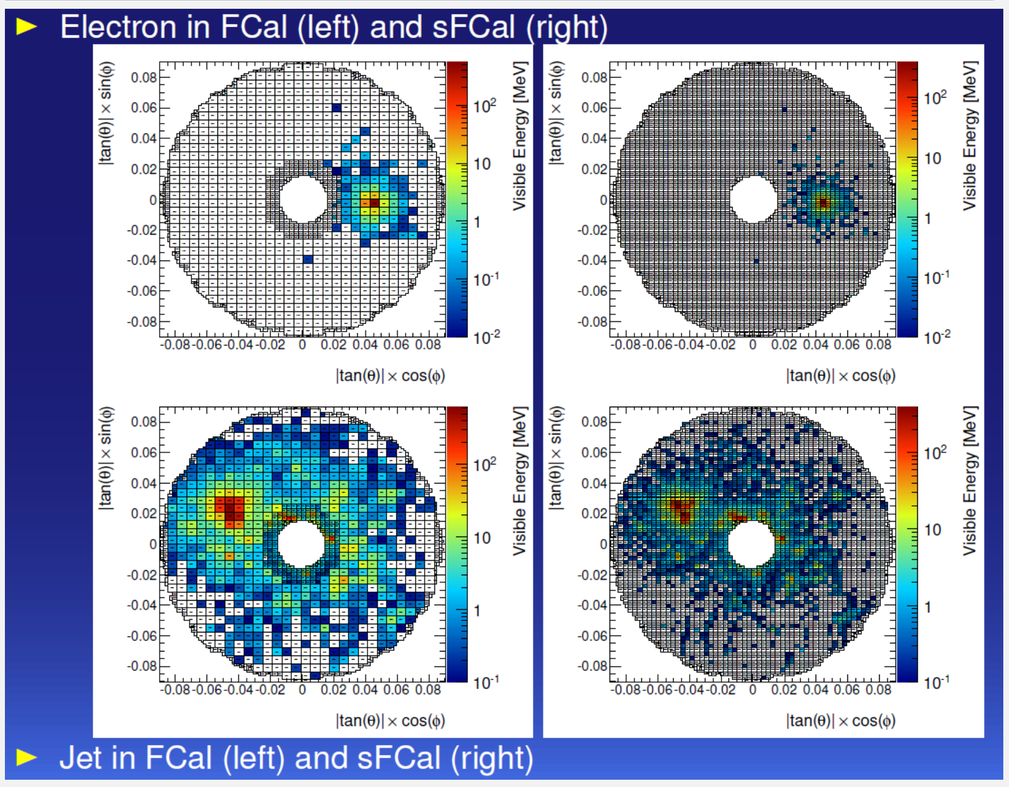

Optimization of detector parameters at the Protvino U-70 test-beam forms a basis for the detector upgrades required for Phase-II LHC (ongoing activity)

U-70: p, 50 GeV, 10^{7}—10^{9} p/spill

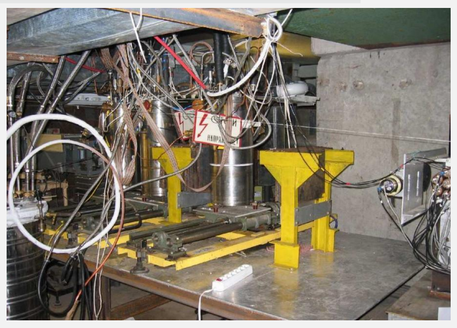

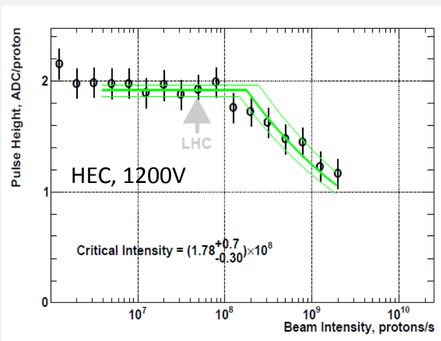

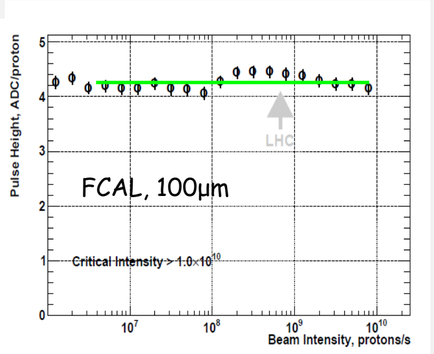

Effect of **space charge** on the pulse shape which affect the detector performance is under study in HiLum experiment at Protvino.

Heat flow measurements with a mock-up are performed to study the possibility for argon over-heating and bubble formation in the cryostat, which would require better efficiency of the cooling system.

Upgrade options under study:

- a new sFCal with smaller LAr gaps (100μm), better cooling and higher transverse granularity
- a new miniFCal in front of existing FCal
  - “cold” - LAr/Cu technology
  - “warm” – Si/W or Diamond/Cu

Different technologies for **HGTD** will be tested:

- Multi-Channel Plate-based detectors,
- single-crystal or poly-crystalline diamonds,
- silicon-based detectors .

LAr calorimeter electronics will be improved at Phase-I and further upgraded for Phase-II LHC

Upgrade of the LAr trigger readout architecture

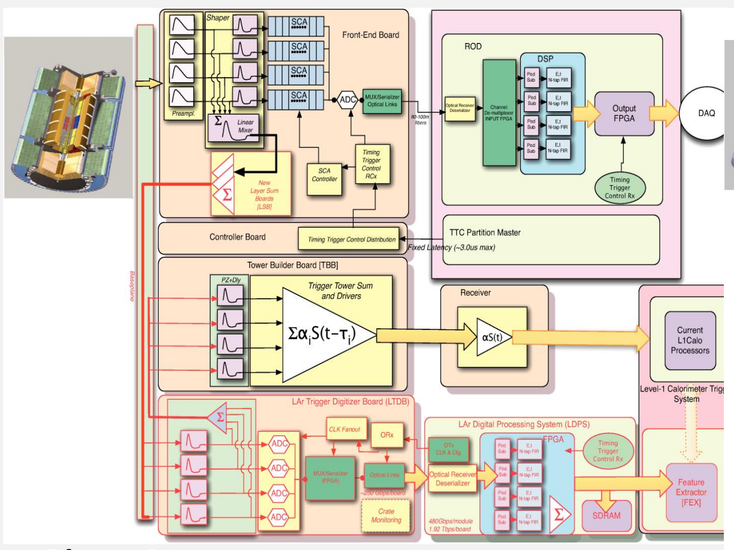

Phase-I

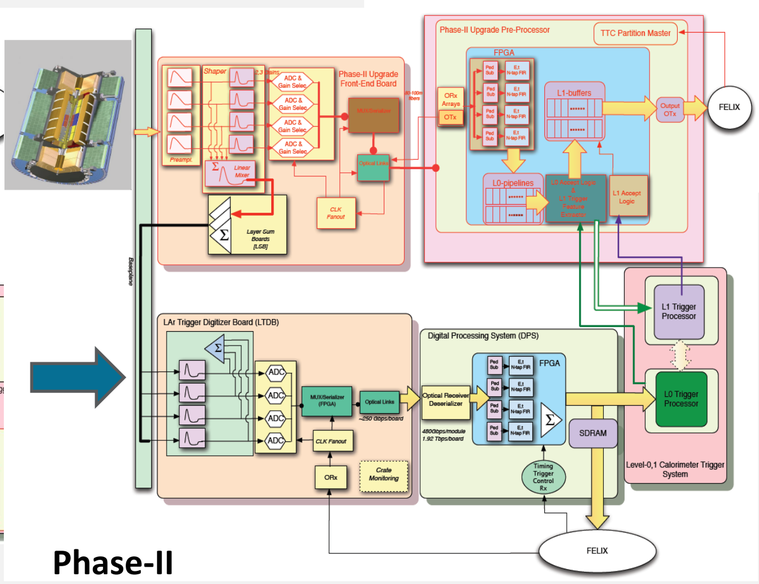

Phase-II

Several alternatives are under study in various groups for the analog, ADC and optical link parts of the **front-end.**

Development of a new radiation tolerant calibration board .

Radiation and performance tests of commercial analog and digital components for the LV system of the HEC.

Efforts continue on development of the back-end system relying on commercial components.

CONCLUSIONS:

- ✓ A rich R&D program is proposed for the ATLAS forward calorimetry, including modernization of the design and development of the new detectors
- ✓ The final selection of the upgrade option and technologies will be driven by the performance consideration and results of risk analyses
- ✓ An intensive simulation study and comprehensive tests, including mock-up, test-beam and irradiation tests at the reactor are ongoing

Irradiation Facility at JINR Dubna – fast neutron pulsed reactor IBR-2M

(supported by MES RF, Grant RFMEFI61014X0005)

IBR-2m: 10^{18} n/cm^{2} achievable in one week

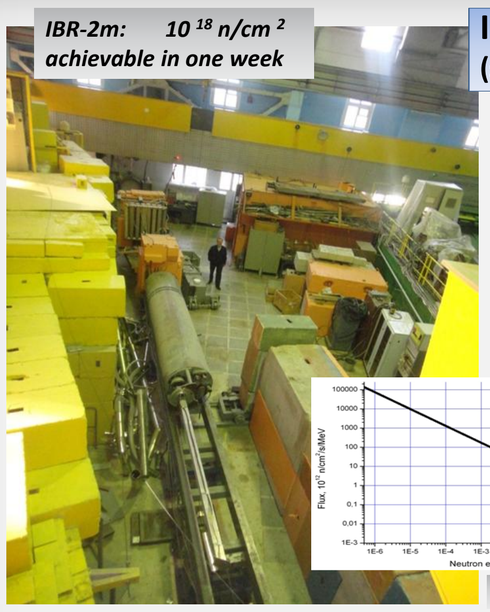

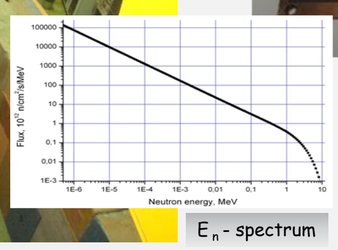

E_n - spectrum

FR4 PCB after 3·10 ^{17} n/cm^{2}

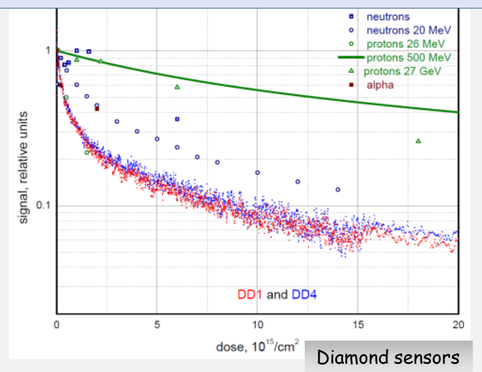

Diamond sensors

The facility was modified to allow testing of the detector materials to the highest neutron fluences (10^{18} n/cm^{2}). Several samples of materials for miniFCal options have been tested, a few more (PCB, sc-CVD, etc.) to be tested soon.

LHCP-2015 - The Third Annual Large Hadron Collider Physics Conference , August 31 – September 5 2015, St.Petersburg, Russia