Unified Software Framework for Upgraded Belle DAQ System

R.Itoh, T.Higuchi, M.Nakao, and S.Y.Suzuki
KEK

presented by Ryosuke Itoh

Computing in High Energy and Nuclear Physics 2006
Online Computing Session
Feb.13, 2006
Mumbai, India

Outline

1. Introduction

2. Belle DAQ upgrade

3. Software Design

4. Implementation
   - Frontend Readout Module
   - Readout PC
   - Event Builder
   - Reconstruction Farm

5. Summary

1. Introduction

KEKB Accelerator

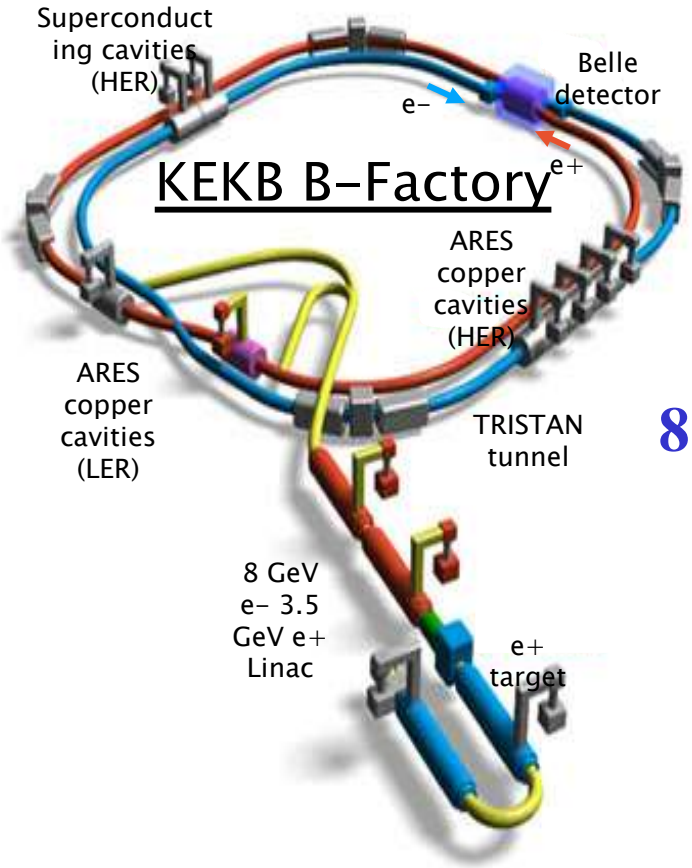

Belle Detector

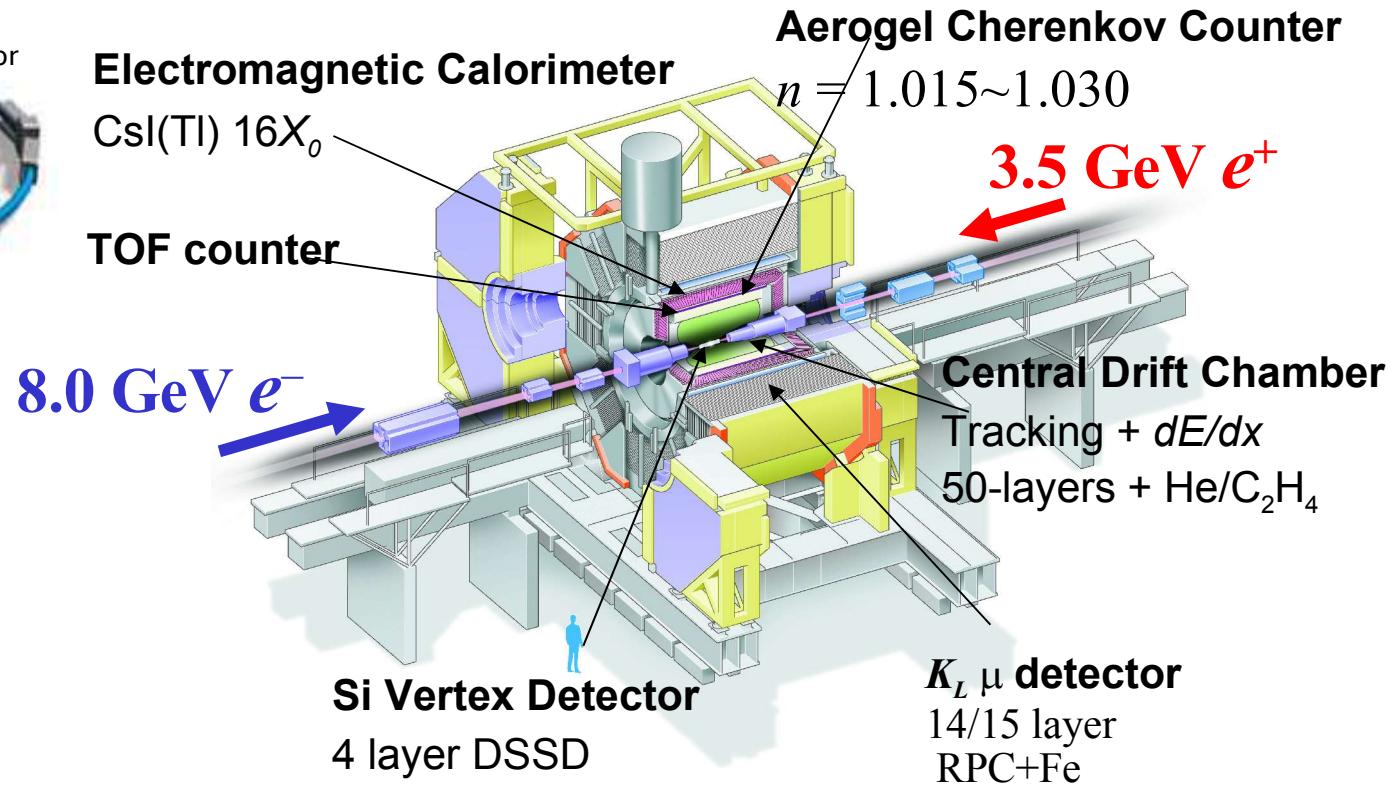

Belle Experiment: B-factory experiment at KEK in Japan to study CP violation in B meson decays.

- Precise determination of unitary triangle
- Discoveries of new particles: X(3872), Y(3940)
- New physics search in radiative decays : $B^0 \to K^* l^+ l^-$, $b \to d\gamma$

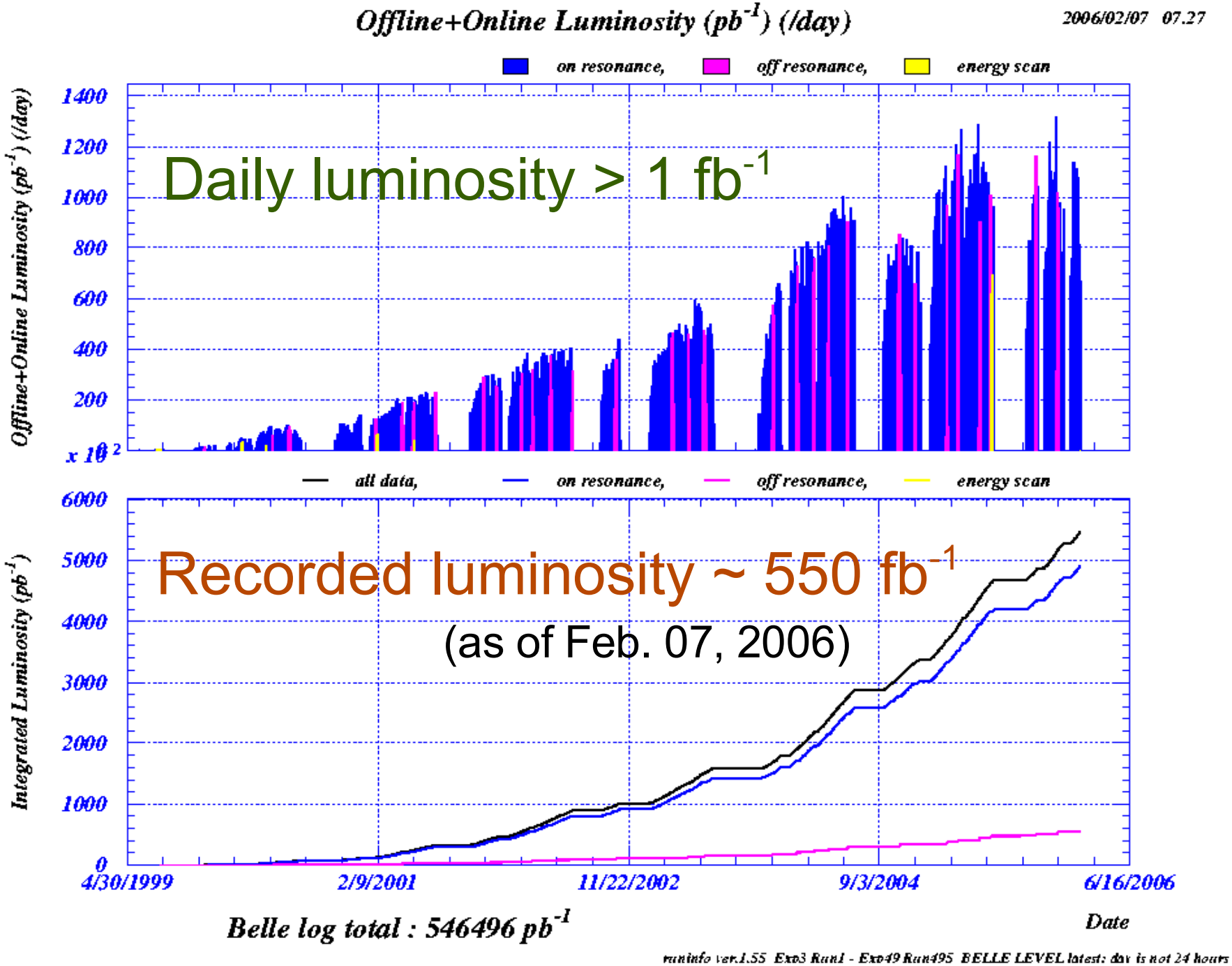
Offline+Online Luminosity (pb-1) (/day)
2006/02/07 07.27
on resonance,
off resonance,
energy scan
Offline+Online Luminosity (pb-1) (/day)
1400
1200
1000
800
600
400
200
x 10 2
Daily luminosity > 1 fb-1
all data,
on resonance,
off resonance,
energy scan
Integrated Luminosity (pb-1)
6000
5000
4000
3000
2000
1000
0
Recorded luminosity ~ 550 fb-1
(as of Feb. 07, 2006)
4/30/1999
2/9/2001
11/22/2002
9/3/2004
6/16/2006
Date
Belle log total : 546496 pb-1
runinfo ver.1.55 Exp3 Run1 - Exp49 Run495 BELLE LEVEL latest: day is not 24 hours

2. Belle DAQ Upgrade

Belle DAQ system until 2005 summer

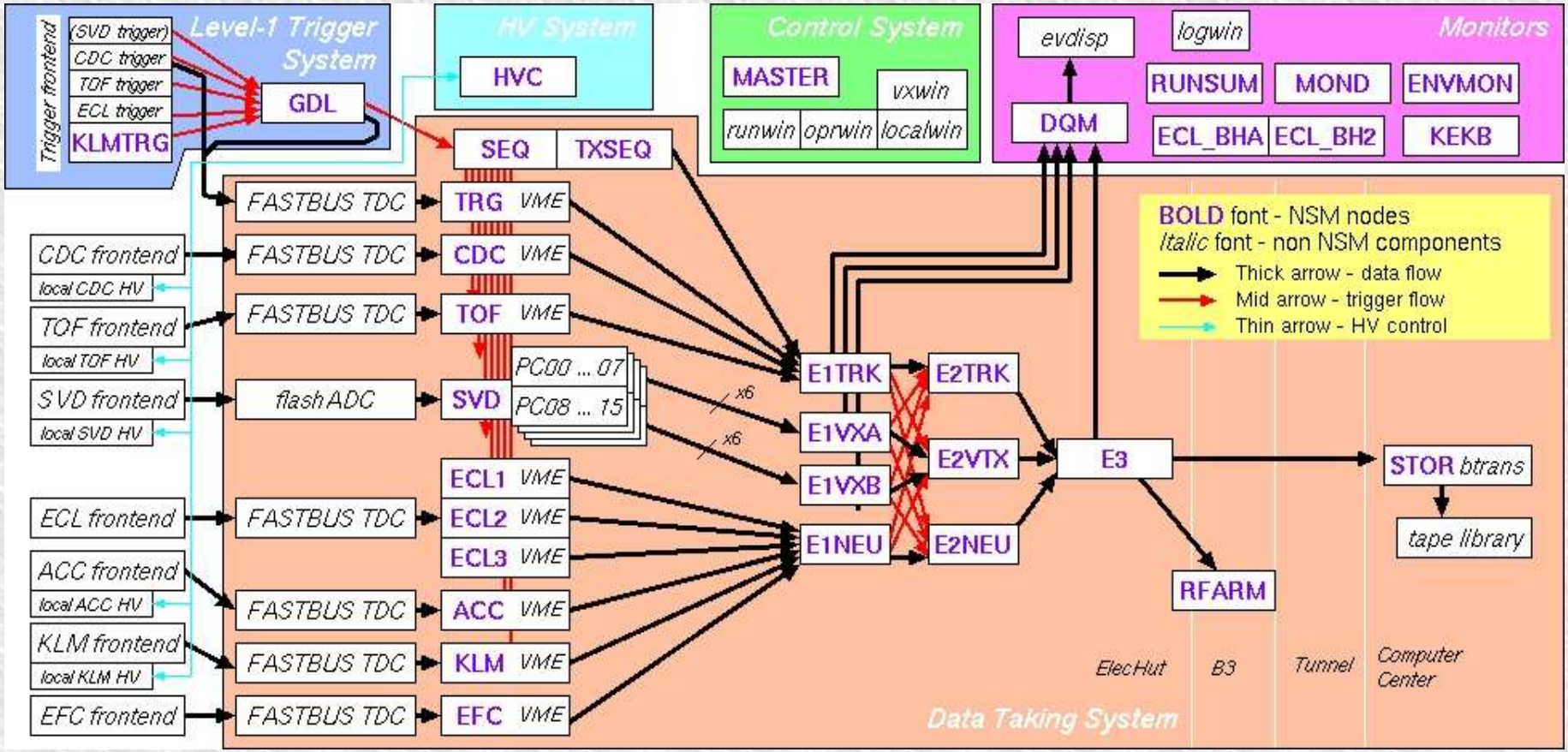

* Q-to-T conversion + FASTBUS TDC, Switchless Event Builder
* Ave. Trigger Rate ~ 500Hz, Event Size ~ 40KB
  Intrinsic dead time ~ 4% (+ 3.5% due to injection VETO for continuous injection)
* RFARM for real-time event reconstruction

DAQ intrinsic deadtime (injection VETO(3.5%@10Hz) is NOT included)

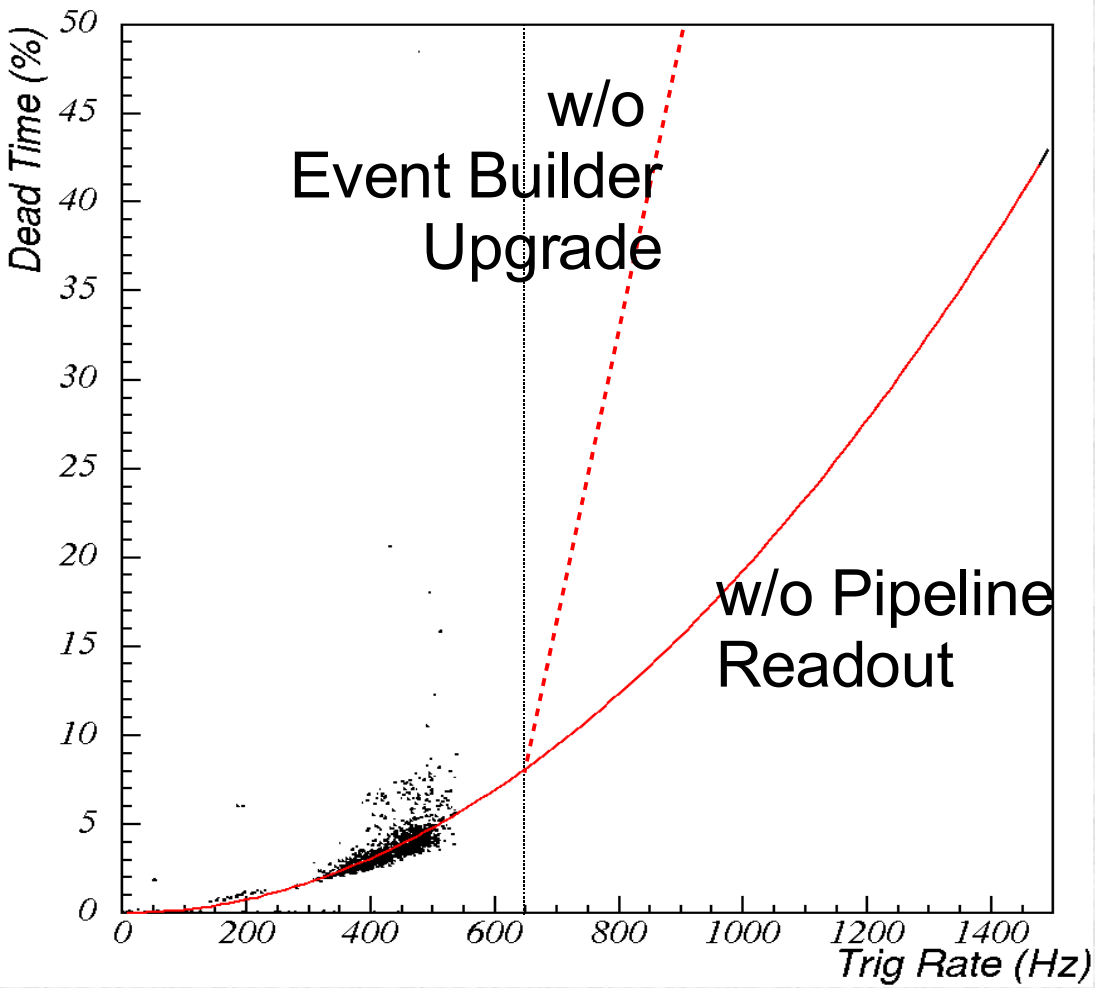

Crab cavity installation is scheduled in Mar-Apr 2006.

L will reach > 2 x 10^{34} $cm^{-2}sec^{-1}$ in a few years

↓

Trigger rate > 1KHz

↓

DAQ deadtime > 20%
which is unacceptable.

+ SuperKEKB upgrade
=> up to 30KHz!

1. Upgrade of readout system to pipeline-based system
   ** Unified pipeline readout module has been developed.*
2. Upgrade of Event Builder/RFARM also.
   ** To remove 650Hz barrier*

Global Design of DAQ upgrade (toward SuperKEKB)

3-stage event building

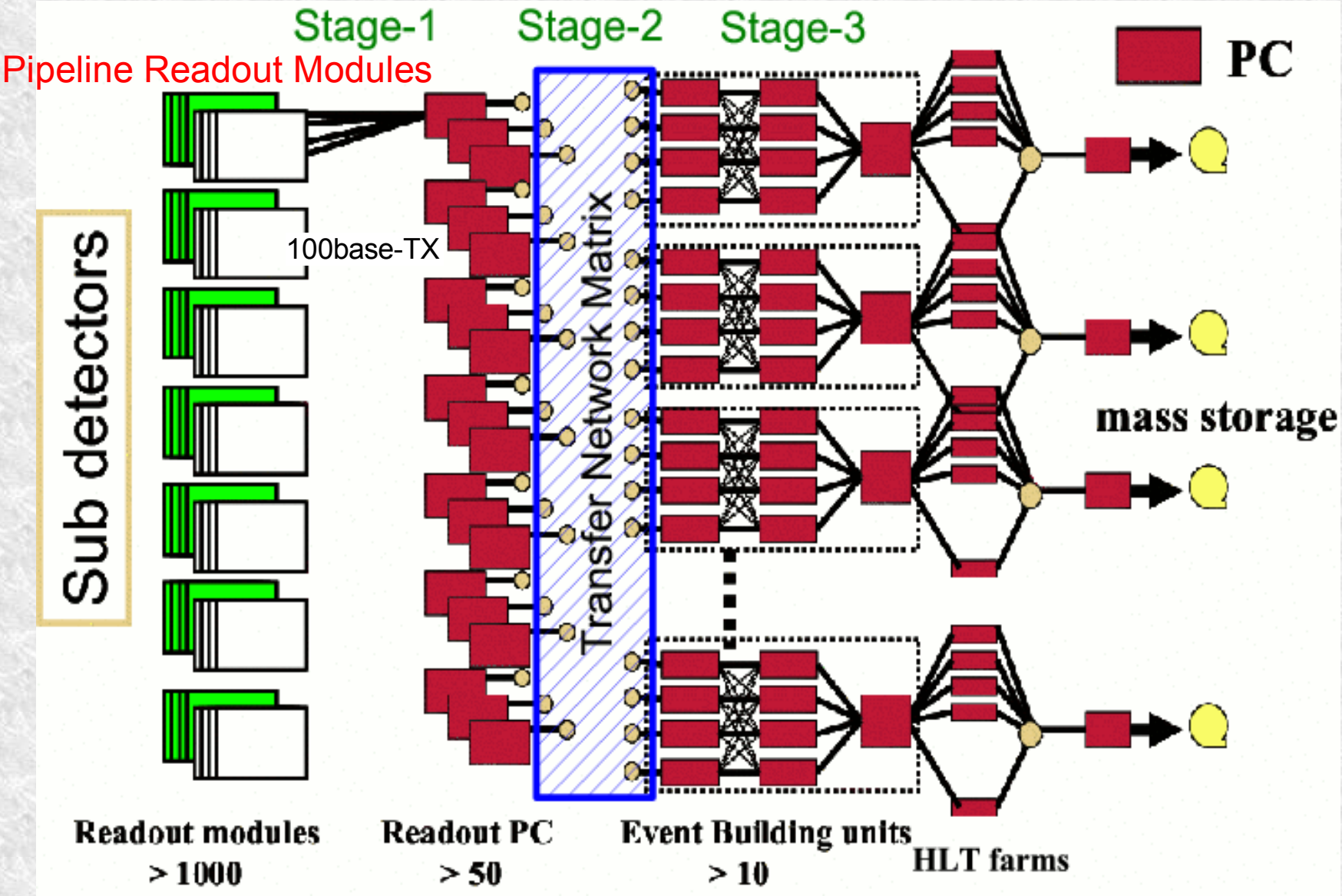

Unified Pipeline Readout Module (COPPER)

Digitizer cards (implemented as daughter cards)

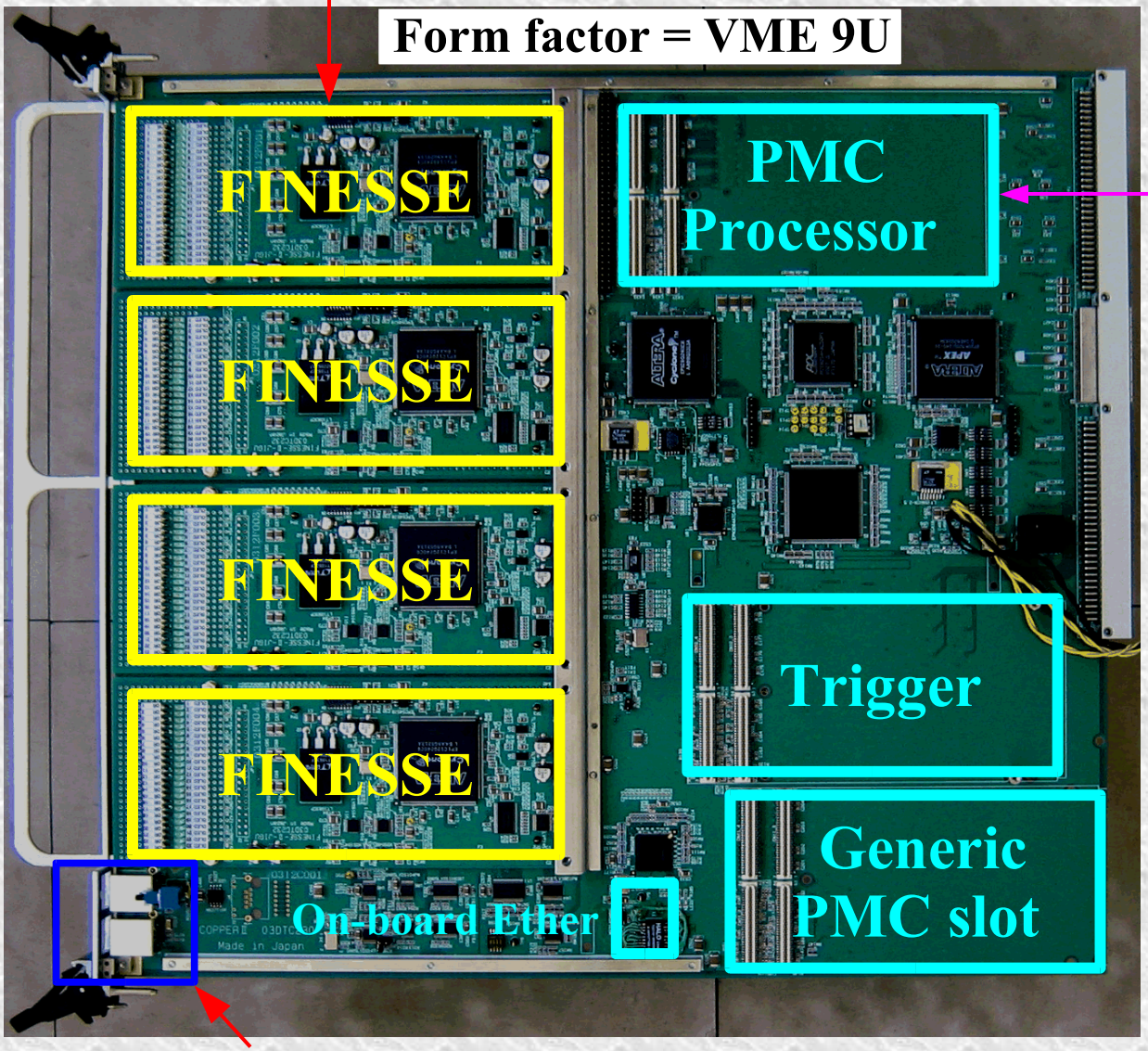

CPU card
(operated by Linux)

two100base-TX ports
(for control and data flow)

Transfer Network Matrix

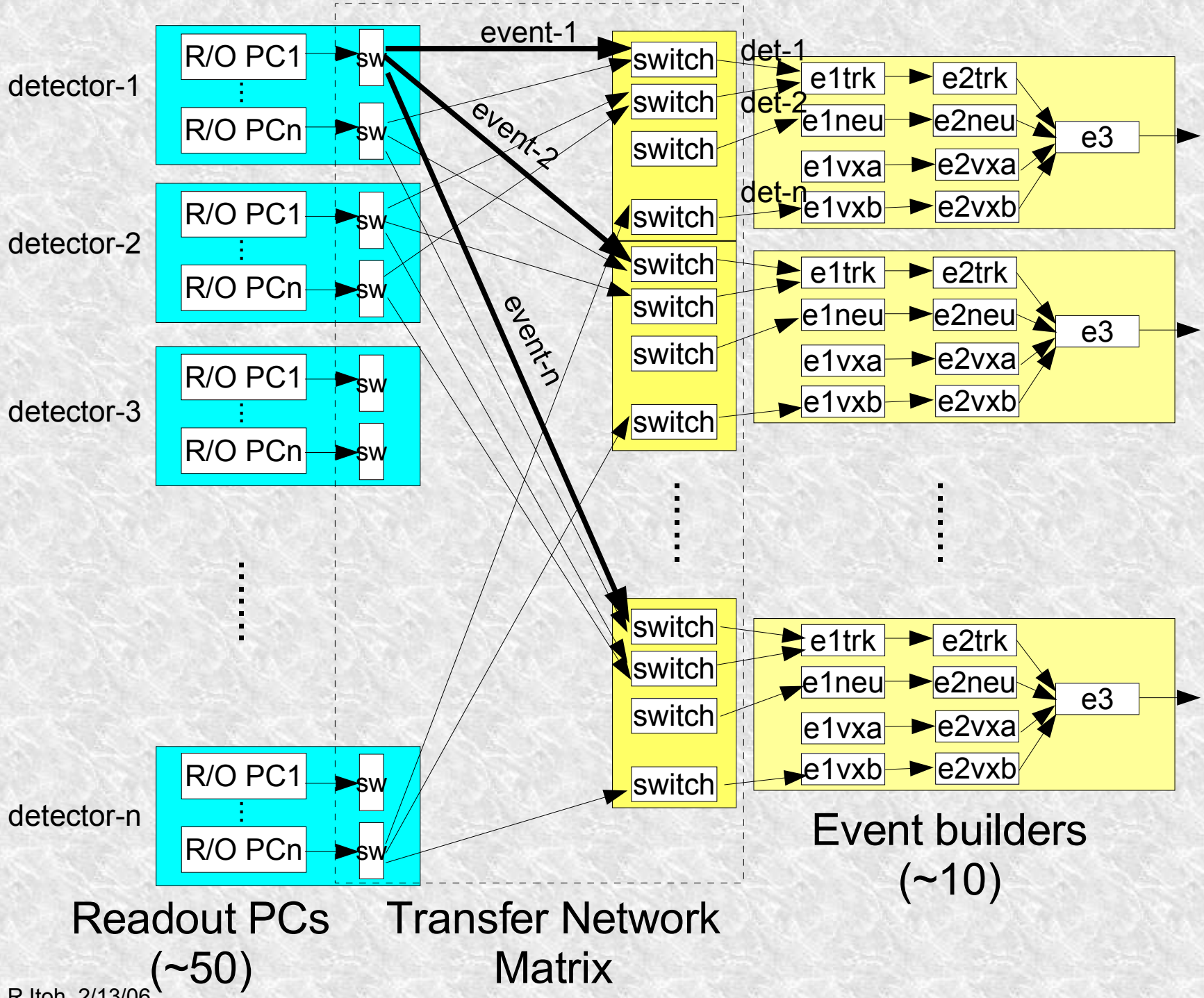

Partially upgraded Belle DAQ (2005 fall -)

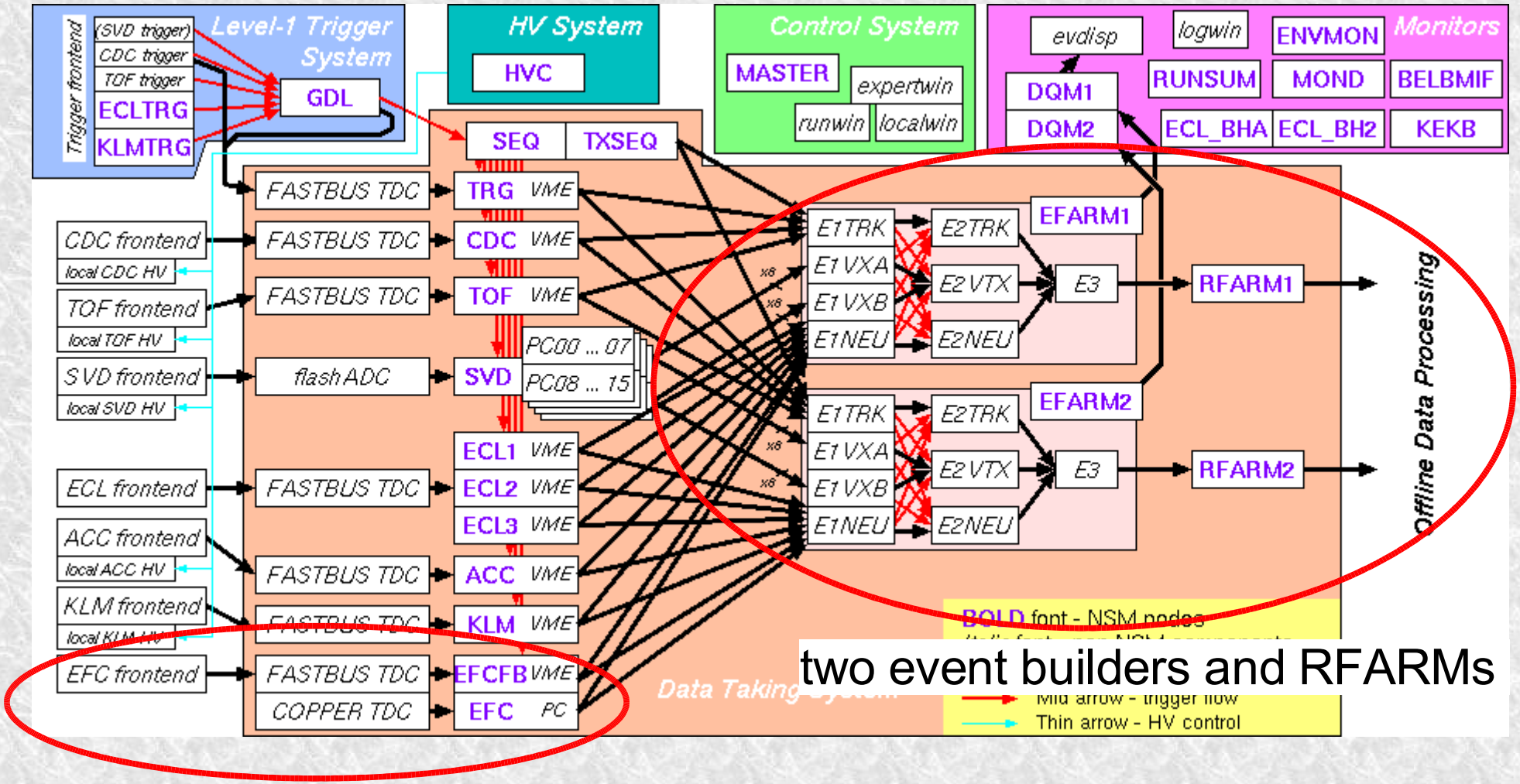

two event builders and RFARMs

COPPER readout for EFC
(for the system test in beam)

EFC COPPER crate

COPPER TDC :
compatible with LeCroy 1877S

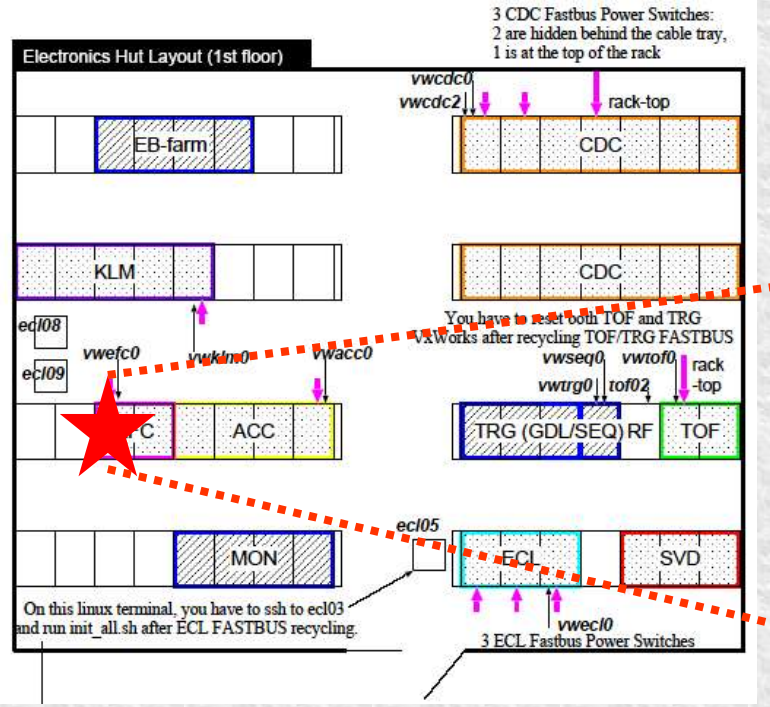

The COPPERs are already on operation from exp#45.

Rack# B14

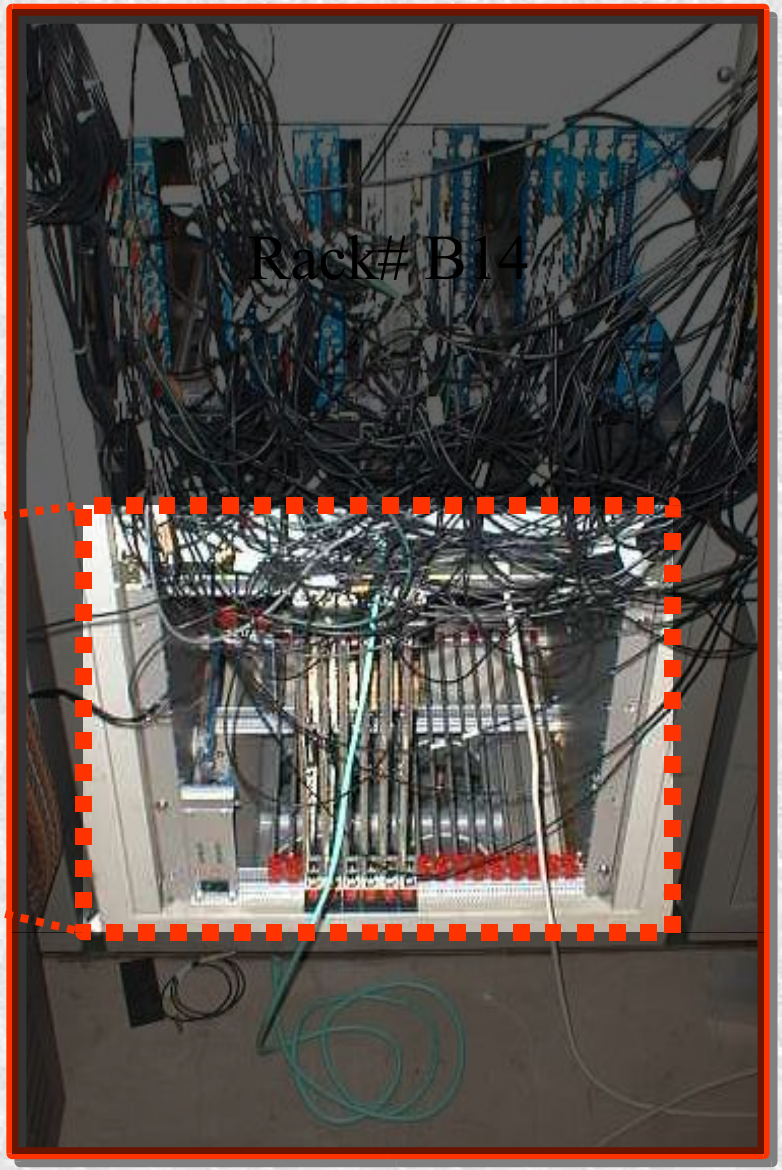

Before Q/T cabling

Transfer Network Matrix + Event Builder 1 and 2

2nd unit of RFARM

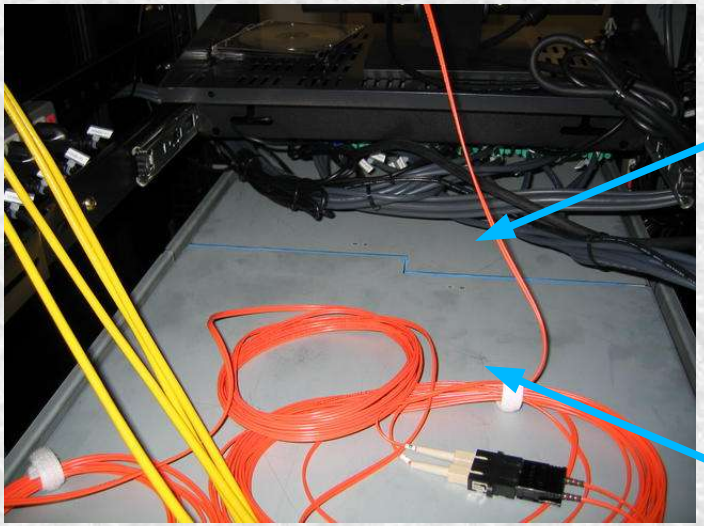

Front-side server

Back-side server

Each server houses dual Xeon 3.4GHz

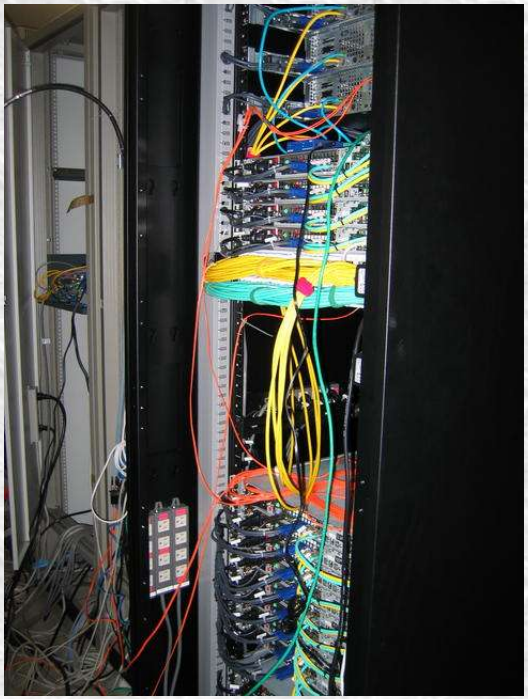

Backside

3. Software Design

[DAQ system from software viewpoint]

* point-to-point TCP/IP based data transfer everywhere.
* Linux operated PC is used in all DAQ components (inc. readout modules).
* 3-stage event building ... repeated use of similar processing

"Building block" construction of DAQ software

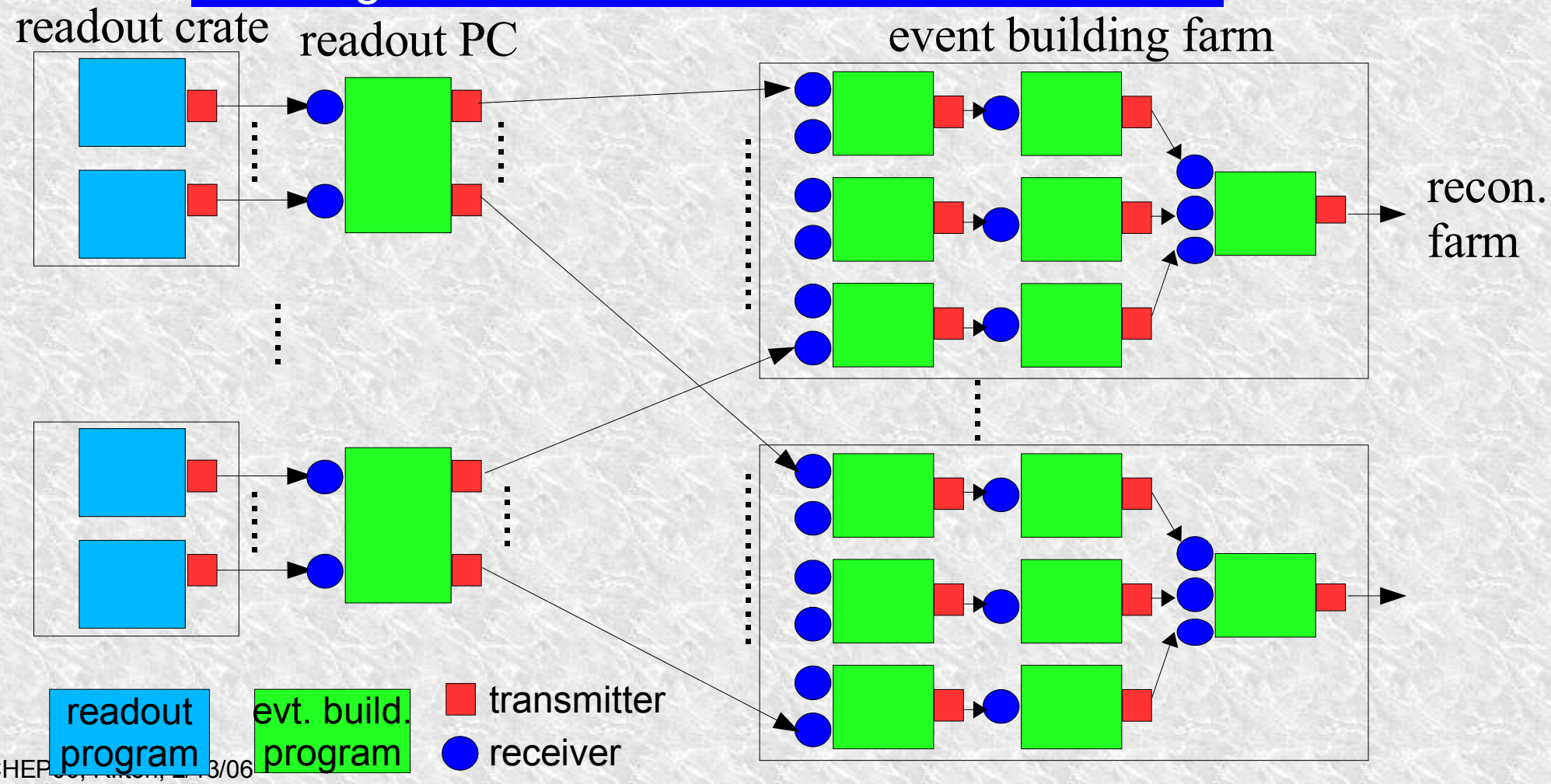

Considerations

Variety of complicated processing is performed on each node.

* Wave form sampling / feature extraction on readout modules.
* “Level 2.5” trigger on first nodes of event building farms.
* Data reduction with node-by-node optimized algorithm on all nodes.

↓

Readout program / Event building program:

→ Should be capable of accepting variety of data processing codes.

- Such codes are written by many people some of those are not familiar with DAQ software.

↓

Needs an offline-like programming environment for DAQ which does not require DAQ-specific knowledge.

Idea: DAQ software based on offline analysis framework

Offline analysis framework : B.A.S.F.
(Belle AnalysiS Framework)

* Well established in Belle and everyone is familiar with it.
* User code can be linked with the framework as modules by a dynamic link.
* Users don't have to take care of data I/O.
  ← data handling through data management package

Readout program / Event Building program :
* B.A.S.F. with DAQ modifications.

Data flow between nodes :
*Socket I/O implemented in B.A.S.F.

B.A.S.F.

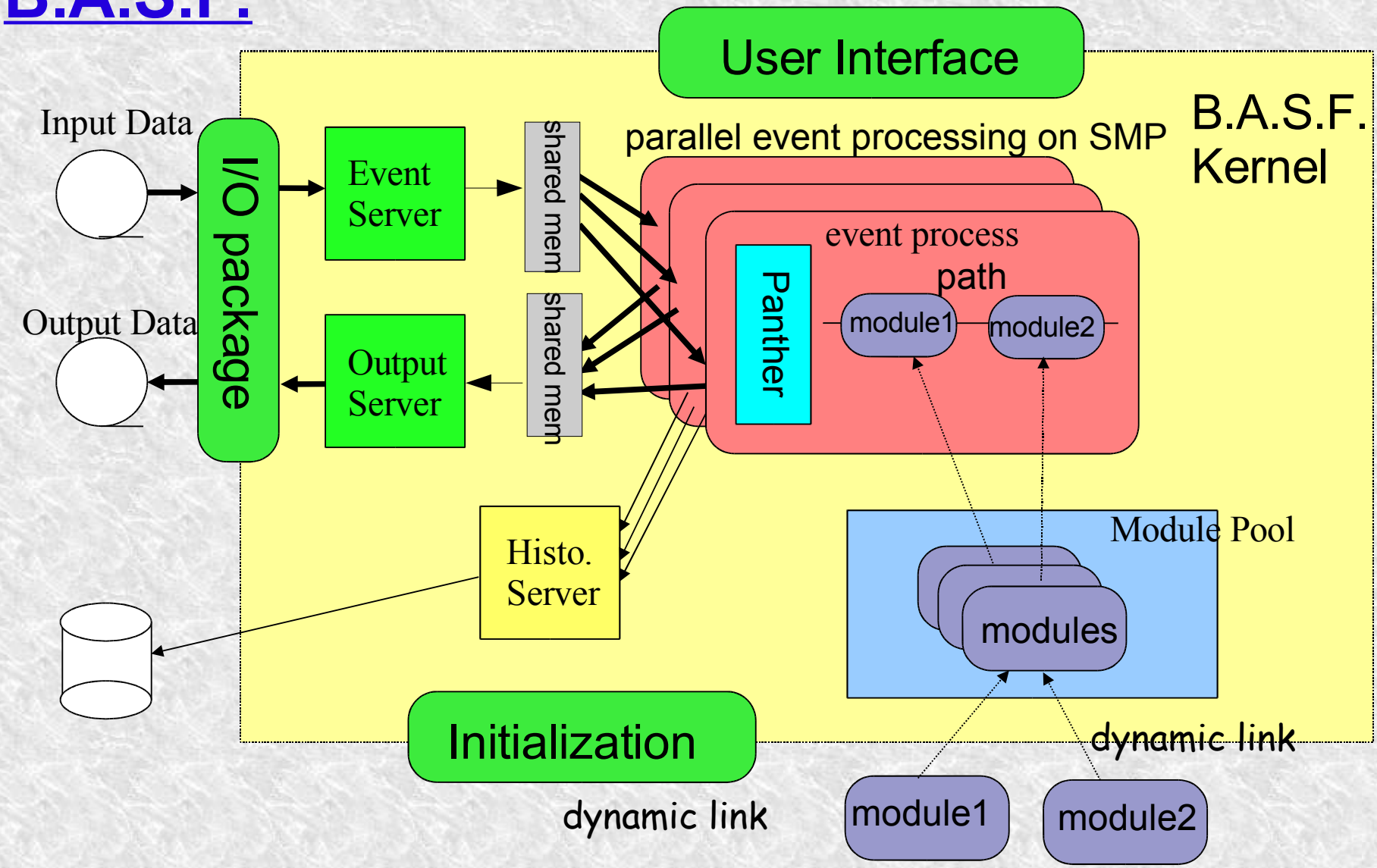

* Green boxes are linked using dynamic link as well as “modules”.
* Data handling is done through “Panther” package.

B.A.S.F. with DAQ mods.

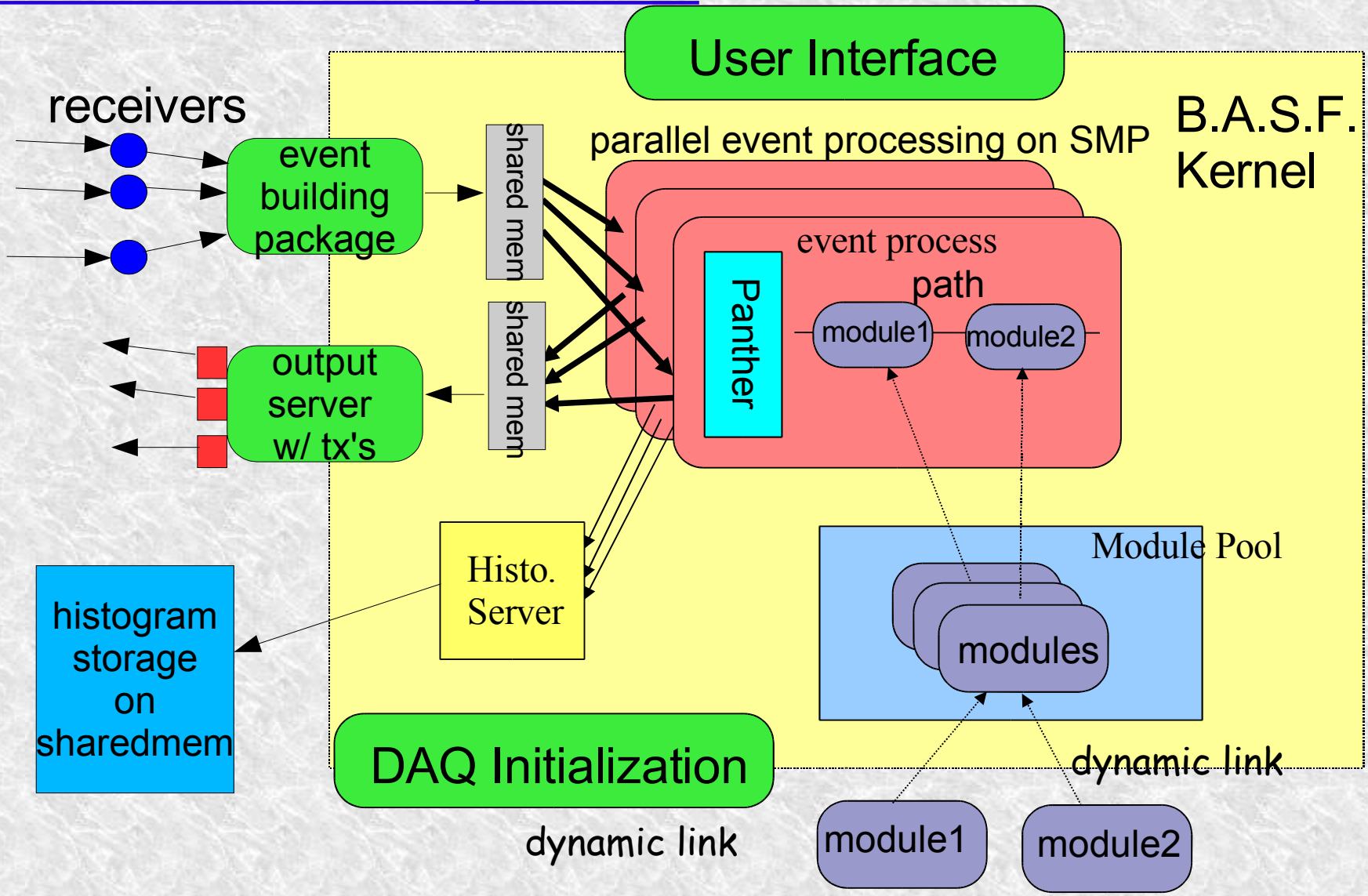

Socket I/O between nodes: based on unified “d2packet” protocol

Slow control

NSM (Network Shared Memory) is used.

* Capable of
  - shared memory handling over network
  - message passing between nodes
    ← asynchronous handling by hooked-up action functions
* DAQ control is done through message passing from one MASTER node to many client nodes.
* Support for hierarchical network structure through functional master.

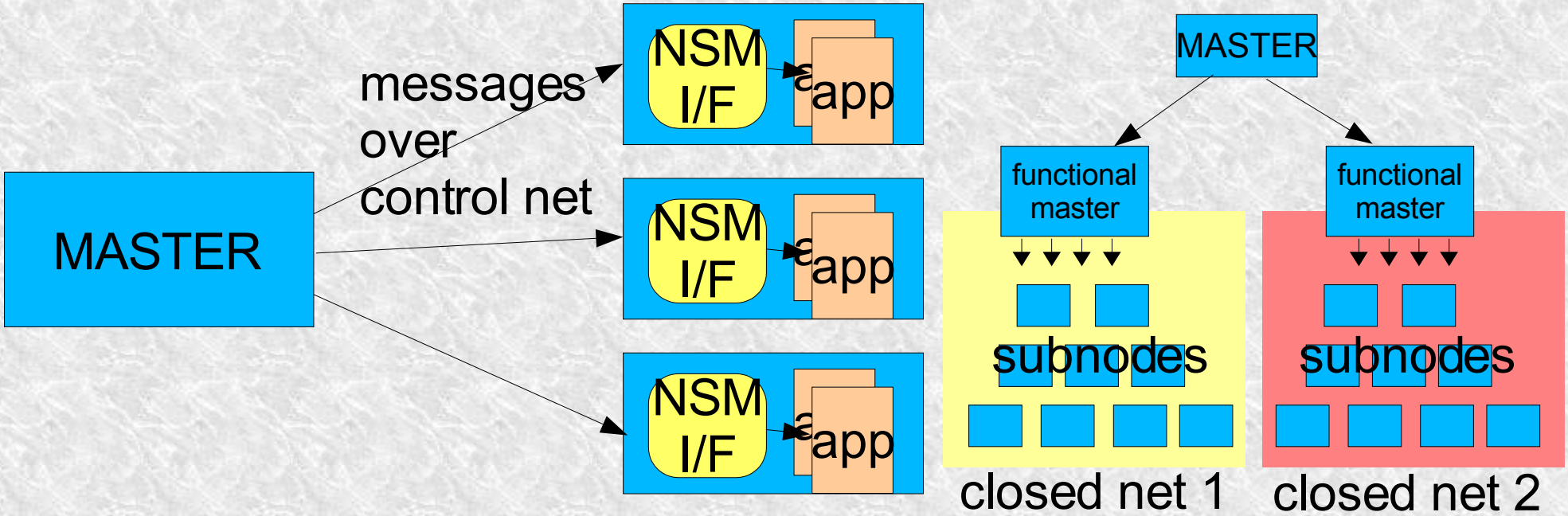

Unified DAQ Software Framework

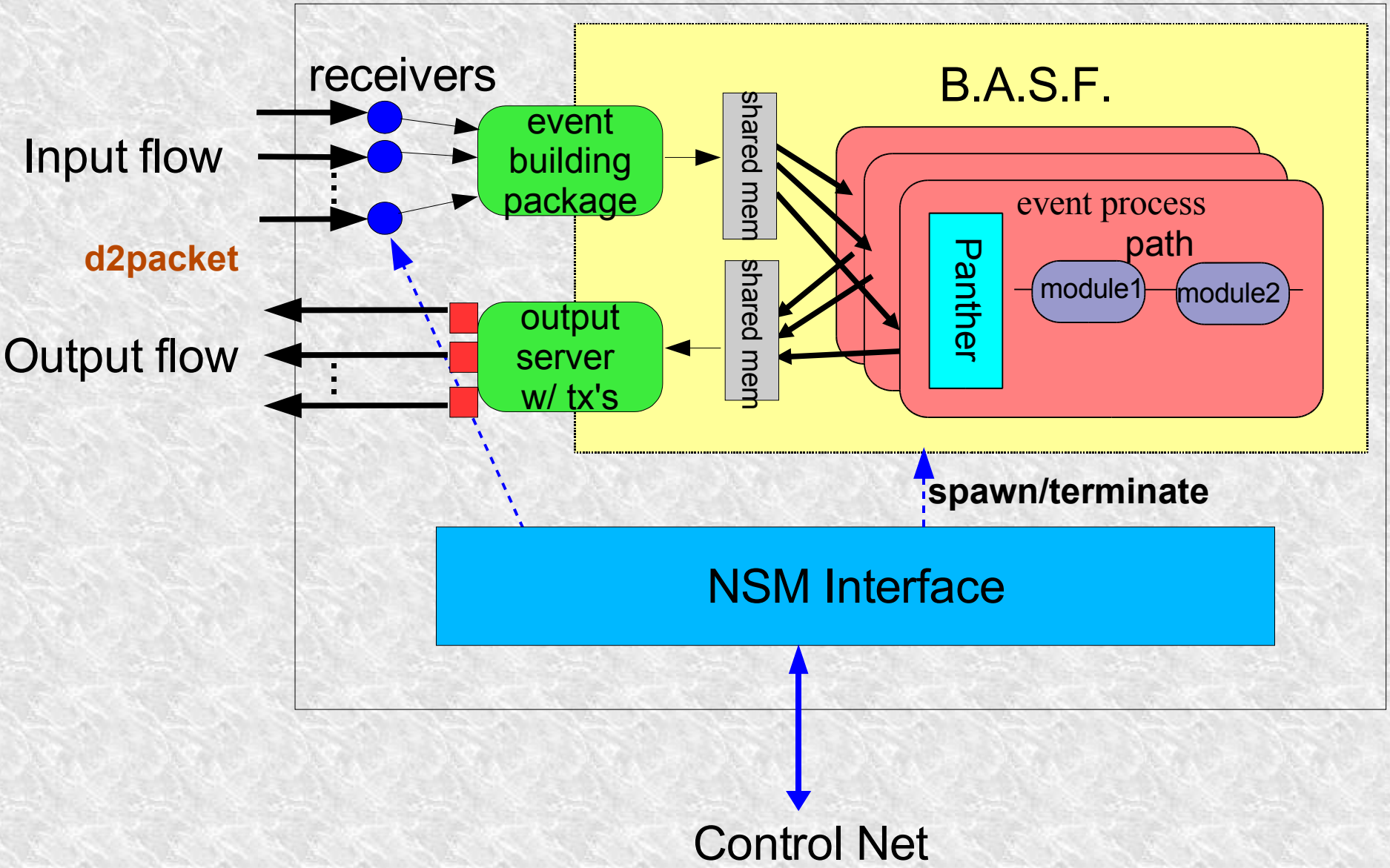

4. Implementations

a) Readout Module (COPPER)

- Special version of B.A.S.F. is used, “cbasf” : light-weight B.A.S.F.
  * parallel processing capability is removed.

- FINESSE(digitizer) cards are accessed through a device driver with standard system calls (open(), close(), read(), write(), and ioctl()).

- Data from digitizers are formatted into Panther at the very beginning.

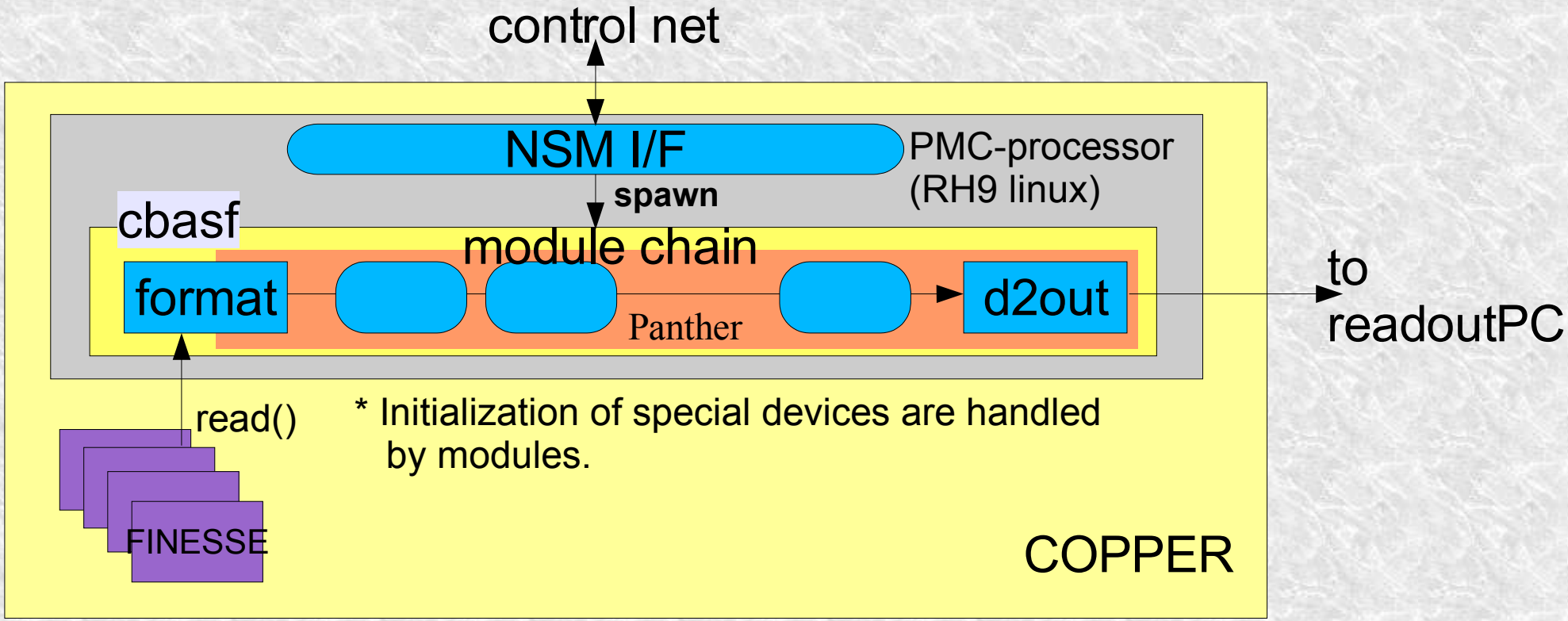

b) Readout PC

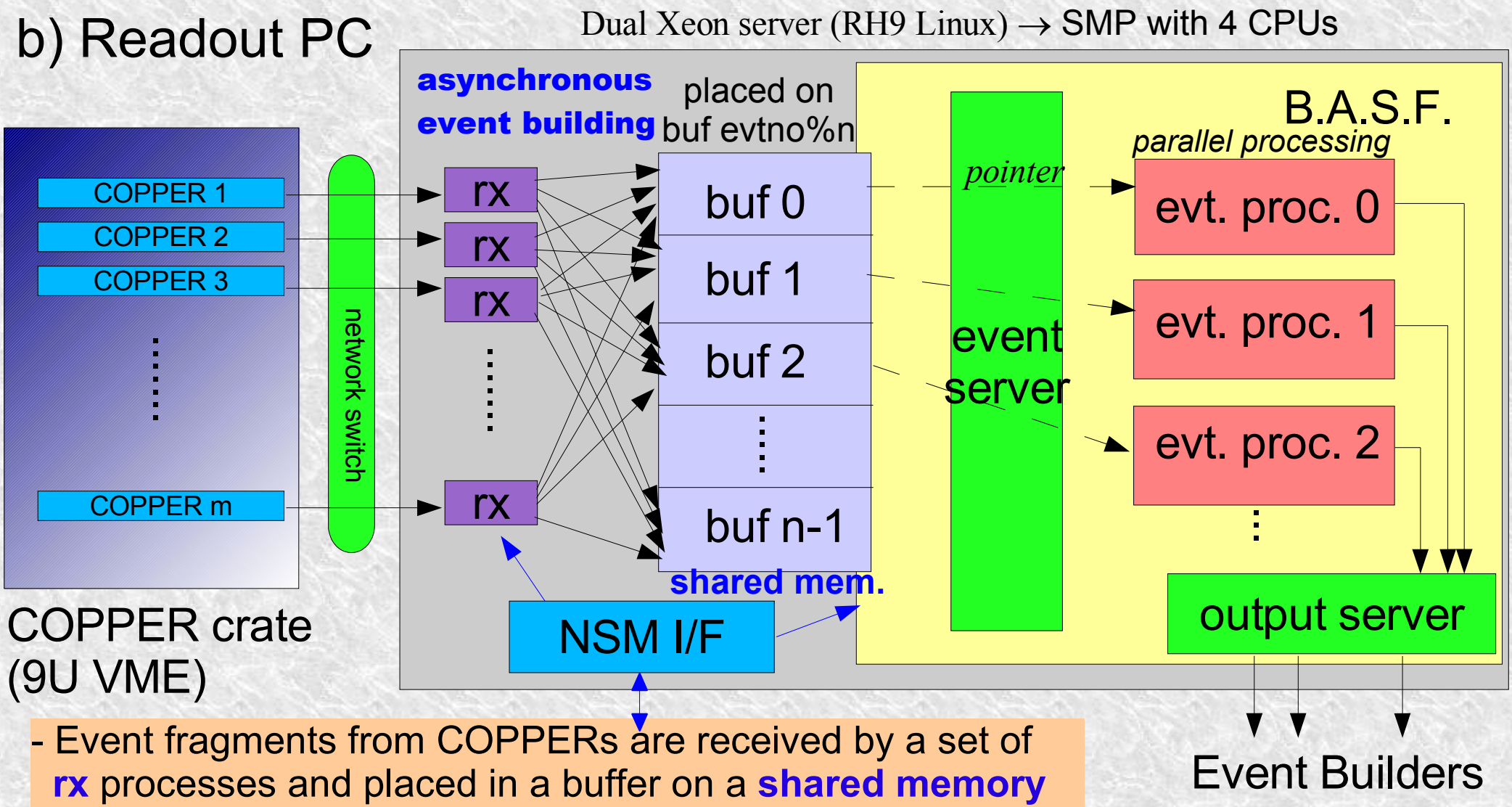

- Event fragments from COPPERs are received by a set of **rx** processes and placed in a buffer on a **shared memory** accoding to event nunber.

- Buffers with all event fragments filled are sent to event process by the "**event server**" by passing pointers.

- "**Output server**" sends processed outputs to event builders in turn through sockets.

c) Event Builder

- Repeated use of software for Readout PC : Unified framework

Software
on single node

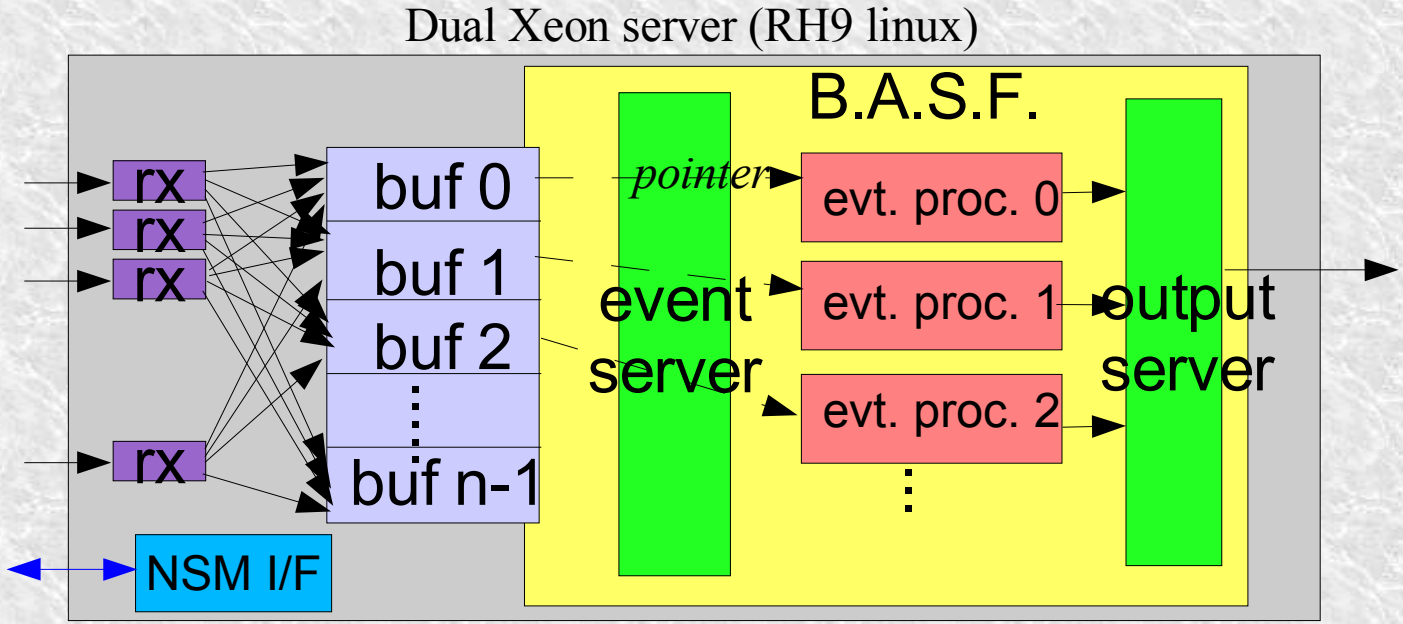

Event Builder Unit

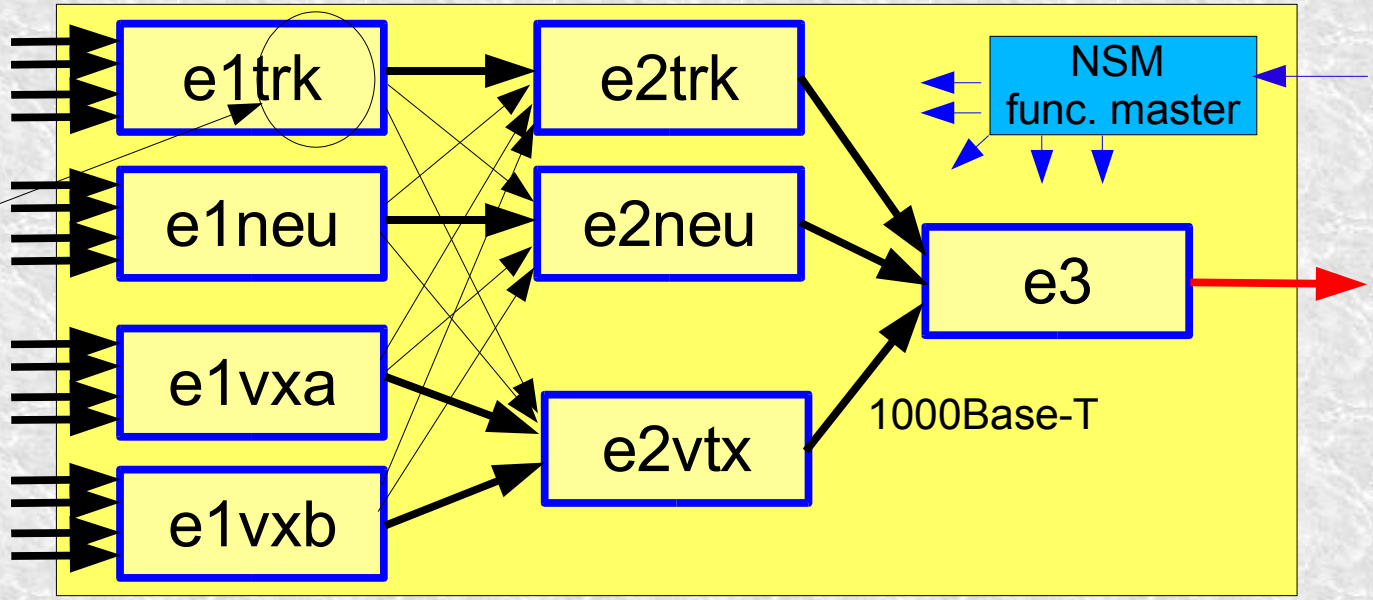

Level 2.5 software trigger is implemented as a B.A.S.F.module

d) Reconstruction Farm

Nodes are dual Athron or Xeon servers oprated by linux(RH7.3/9 and WBL3)

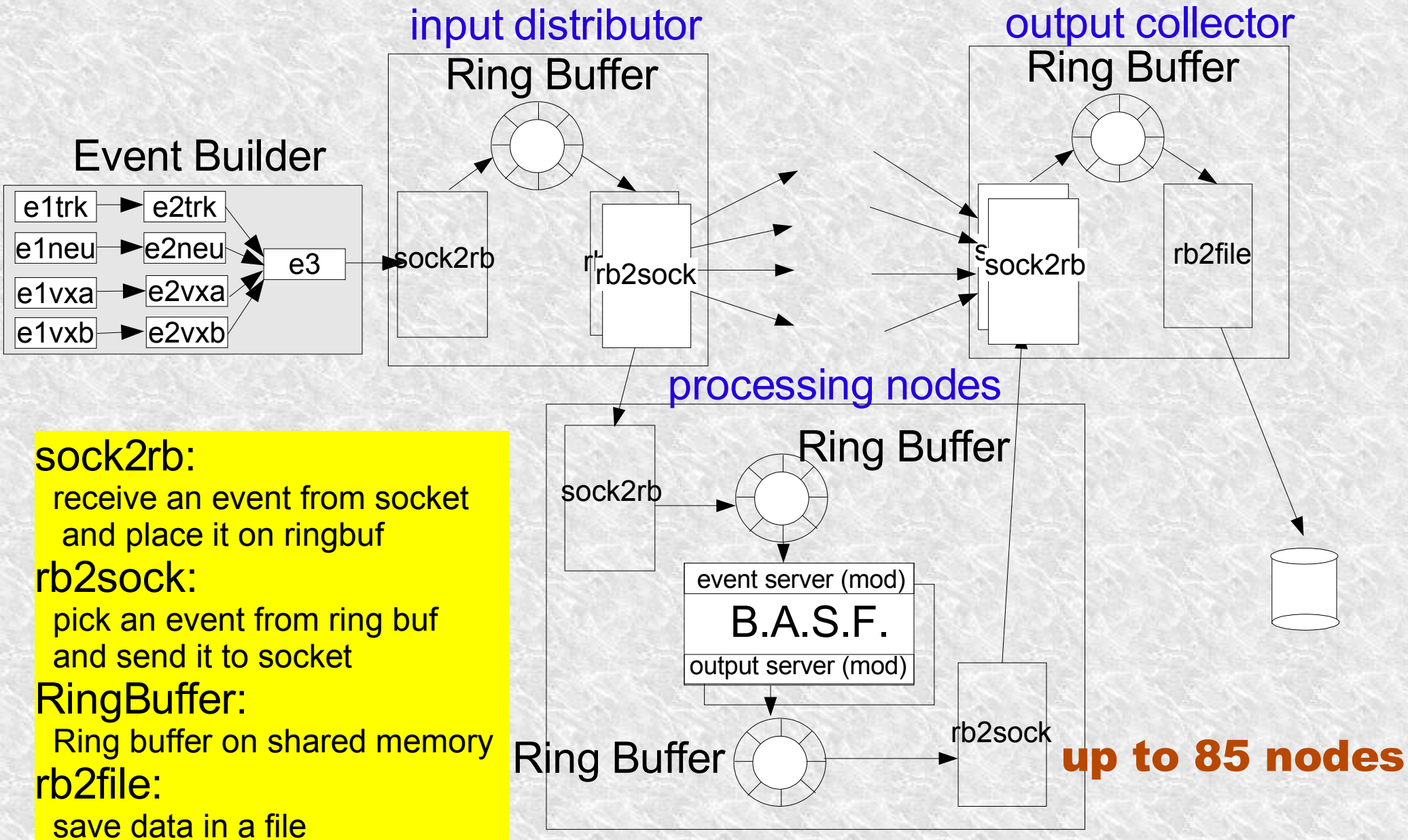

sock2rb:
receive an event from socket and place it on ringbuf

rb2sock:
pick an event from ring buf and send it to socket

RingBuffer:
Ring buffer on shared memory

rb2file:
save data in a file

Each node : controlled by NSM in a closed net thru. functional master on a control node.

5. Summary

* Upgrade of Belle DAQ sysem is on going to keep up with a luminosity increase in coming years.

* A unified DAQ software framework is developed based on Belle's offline analysis framework combined with a socket I/O and event building package.

* The framework is used even on every front-end readout module.

provides easy and consistent environment for the development of DAQ software

* The partially-upgraded Belle DAQ system is now being operated with the unified software framework and is working stably.

Backup Slides

EFC COPPER Integration

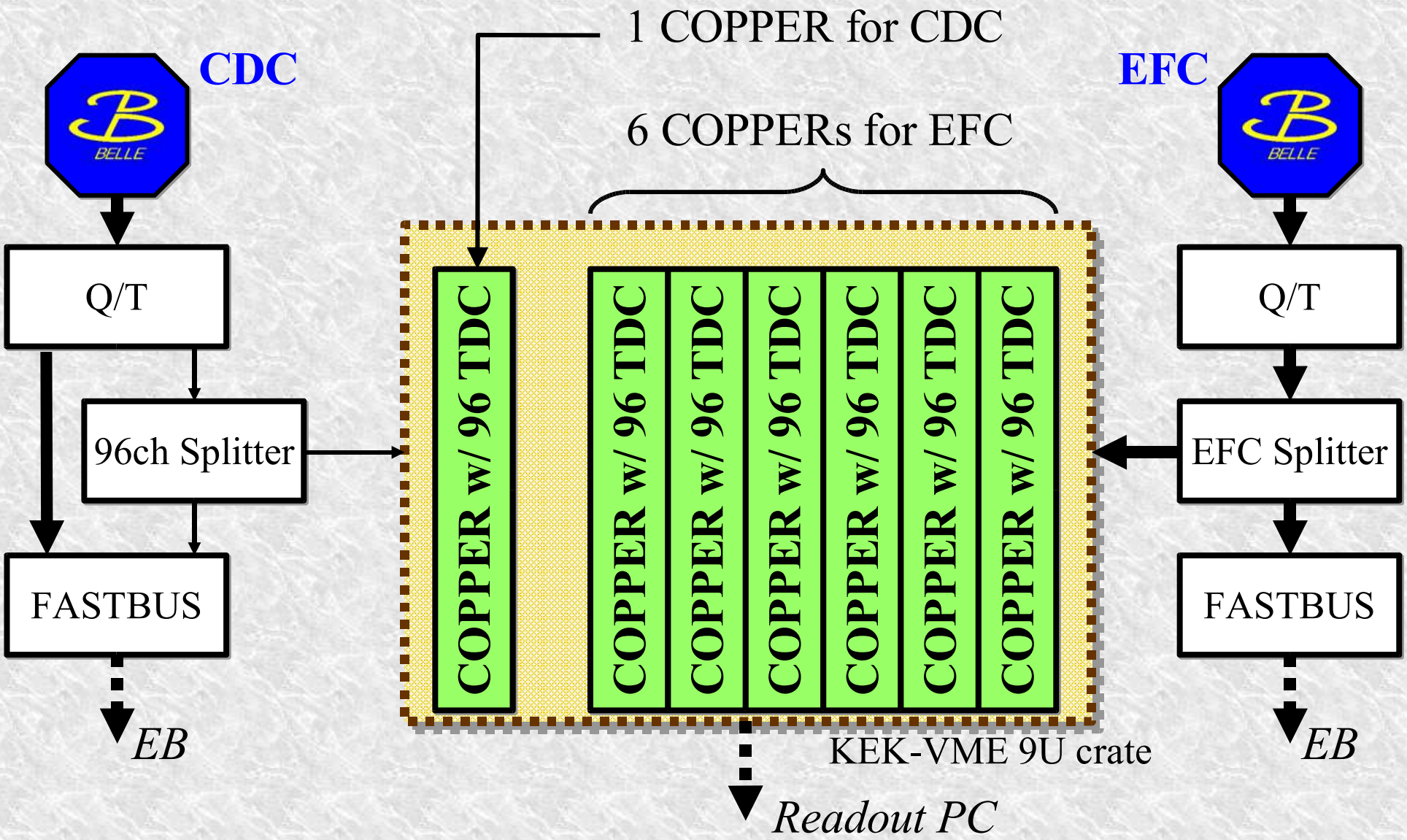

Trigger Timing Distribution