Security Mechanisms

The European DataGrid Project Team

http://www.eu-datagrid.org

Overview

- User side
  - Getting a certificate
  - Becoming a member of the VO
- Server side
  - Authentication / CA
  - Authorization / VO

(with some examples)

Authentication/Authorization

- Authentication (CA Working Group)
  - 16 national certification authorities + CrossGrid CAs
  - policies & procedures → mutual trust
  - users identified by CA's certificates
- Authorization (Authorization Working Group)
  - Based on Virtual Organizations (VO).
  - Management tools for VO membership lists.
  - 6+2 Virtual Organizations

VO's	
ALICE	Earth Obs.
ATLAS	Biomedical
CMS	Testbed
LHCb	Tutorial

CA's
CERN
CESNET
CNRS (3)
GermanGrid
Grid-Ireland
INFN
NIKHEF
NorduGrid
LIP
Russian DataGrid
DATAGRID-ES
GridPP
US-DOE Root CA
US-DOE Sub CA
CrossGrid (*)

Authentication Overview

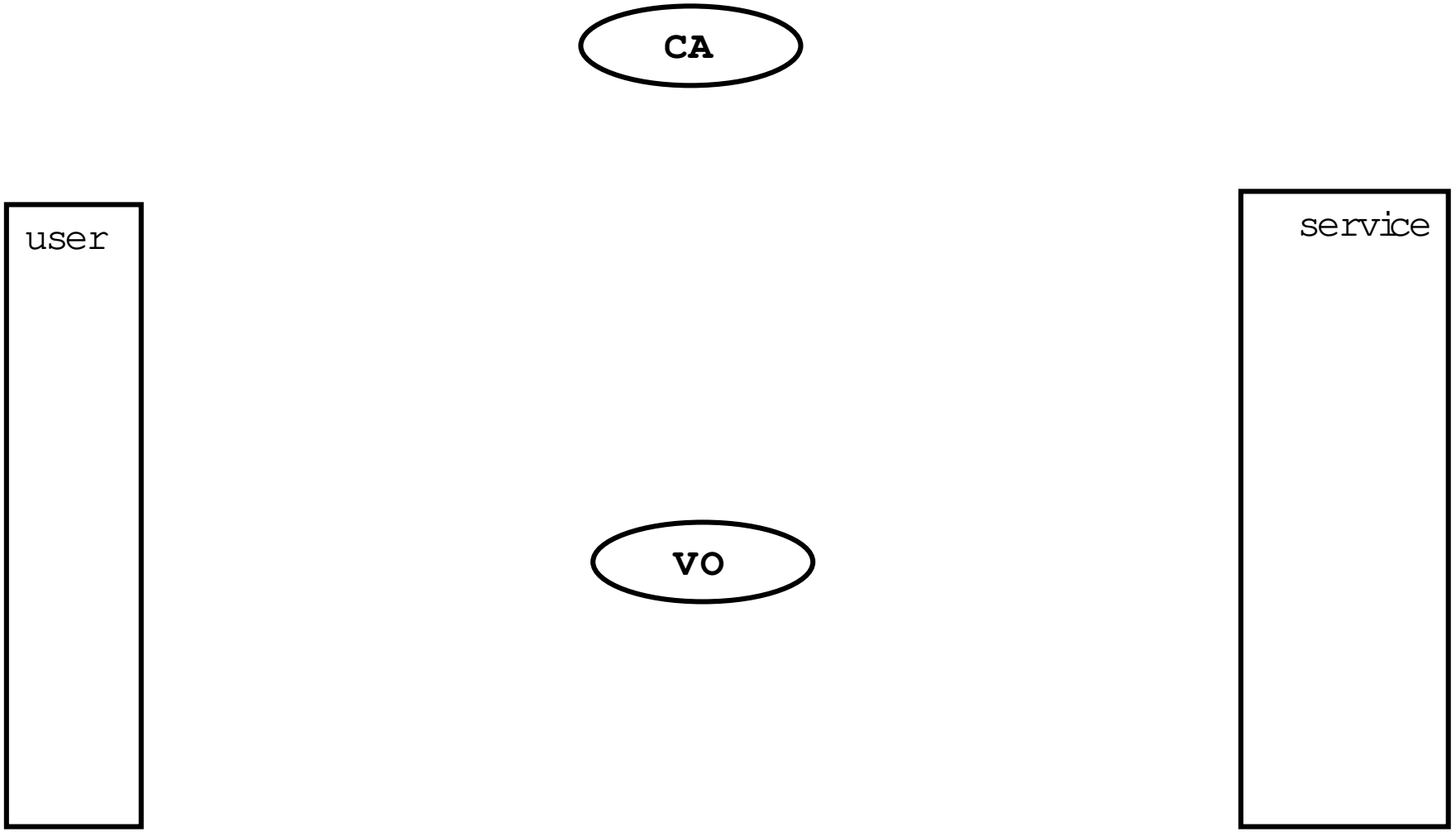

Certificate Request

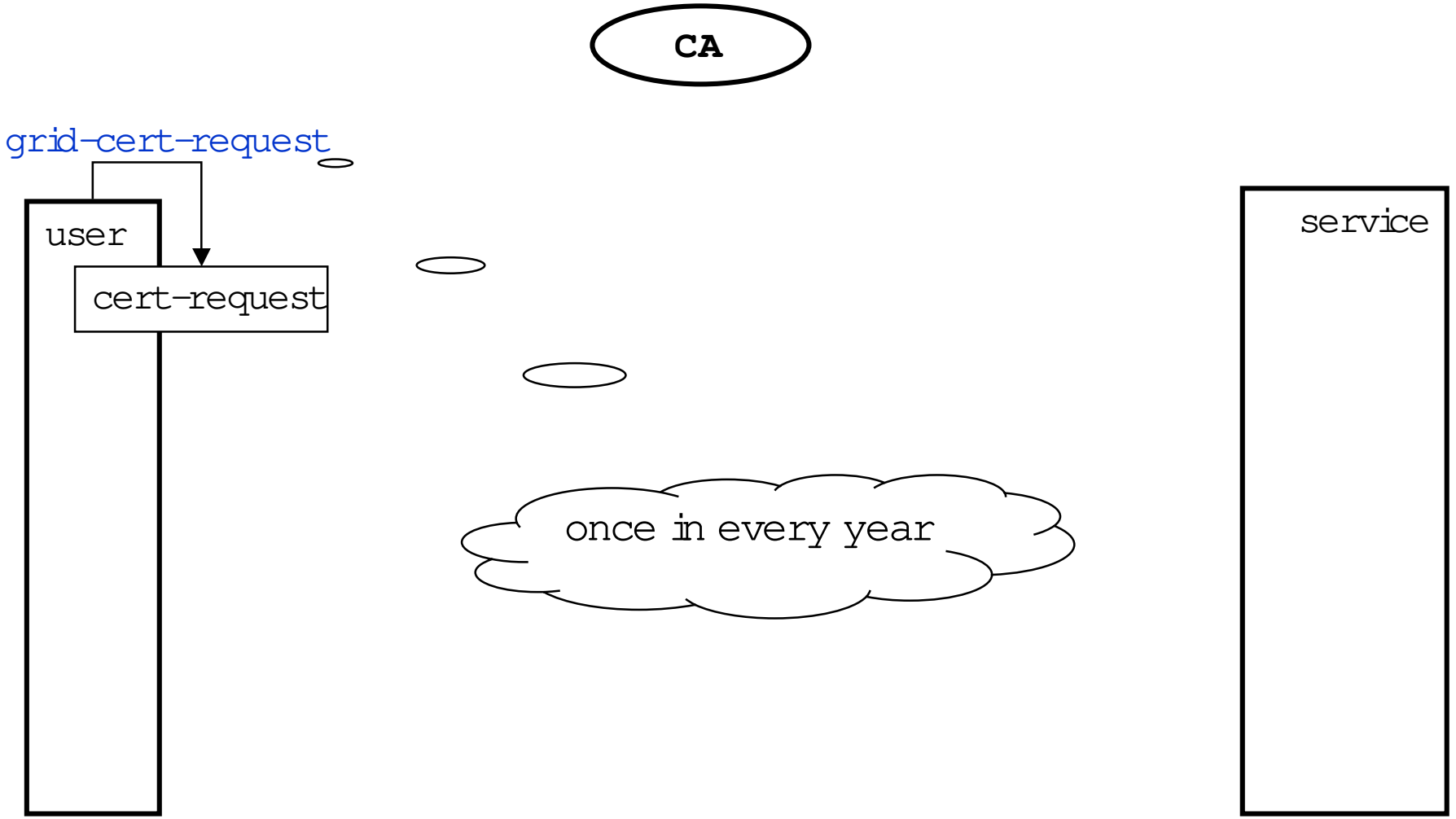

Requesting a Certificate

- **grid-cert-request**

A certificate request and private key is being created.

[...]

Using configuration from /usr/local/grid/globus/etc/globus-user-ssleay.conf

Generating a 1024 bit RSA private key

[...]

A private key and a certificate request has been generated with the subject:

/O=Grid/O=CERN/OU=cern.ch/CN=Akos Frohner

[...]

Your private key is stored in .../**.globus/userkey.pem**

Your request is stored in .../**.globus/usercert_request.pem**

Please e-mail the certificate request to the CERN CA

cat .../.globus/usercert_request.pem | mail cern-globus-ca@cern.ch

Your certificate will be mailed to you within two working days.

Request Details...

example

- **openssl req -in ~/.globus/usercert_request.pem -text**

```
Data:
    Version: 0 (0x0)
    Subject: O=Grid, O=CERN, OU=cern.ch, CN=Akos Frohner      User information
    Subject Public Key Info:
      Public Key Algorithm: rsaEncryption
      RSA Public Key: (1024 bit)
        Modulus (1024 bit):                                   Public key
          00:ba:ae:e2:9a:98:be:94:f5:f5:9e:e7:f7:06:58: [...]
Exponent: 65537 (0x10001)
Signature Algorithm: md5WithRSAEncryption                     Signature on the public
    29:87:63:40:65:af:1b:39:e9:71:b9:3f:70:80:0c:27:71:0e: [...]  key and user information
-----BEGIN CERTIFICATE REQUEST-----                           PEM encoded request
MIIBhjCB8AIBADBHMQ0wCwYDVQQKEwRHcmlkMQ0wC [...]
-----END CERTIFICATE REQUEST-----
```

Certificate Signing

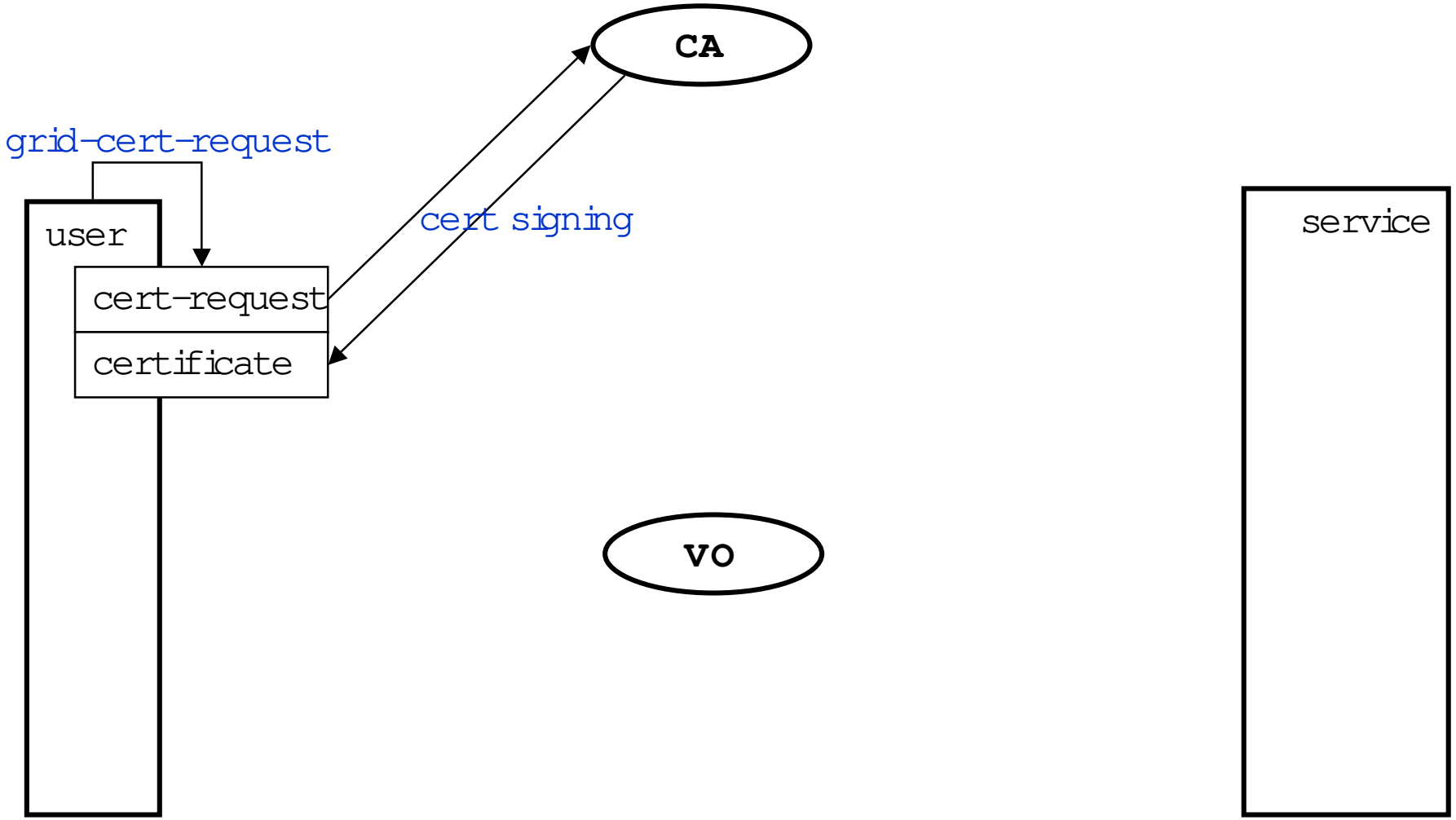

Signing a Request

example

Upon a certificate request from the user

- checking the identity of the user (Registration Authority)
- signing the request and sending back the result
  - openssl ca -in usercert_request.pem -out usercert.pem
- if something goes wrong: revocation of a certificate -> CRL

- the issued certificates are described in the Certificate Policy (CP)
- the process is described in the Certificate Practice Statement (CPS)

Private Key

example

- **`openssl rsa -in ~/.globus/userkey.pem -text`**

Enter PEM pass phrase:

Private-Key: (1024 bit)

modulus: [...]

publicExponent: ..... (0x.....)

privateExponent: [...]

prime1: [...] — private parameters

prime2: [...]

exponent1: [...]

exponent2: [...]

coefficient: [...]

writing RSA key

-----BEGIN RSA PRIVATE KEY----- — PEM encoded private key

-----END RSA PRIVATE KEY-----

Certificate Details 1.

example

- `openssl x509 -in ~/.globus/usercert.pem -text`

Certificate:

Data:

Version: 3 (0x2) — X509.3 – with extensions

Serial Number: 199 (0xc7)

Signature Algorithm: md5WithRSAEncryption

Issuer: C=CH, O=CERN, CN=CERN CA — Issuer CA

Validity

Not Before: Jun 11 08:25:59 2002 GMT — long term certificate

Not After : Sep 29 11:22:33 2002 GMT

Subject: O=Grid, O=CERN, OU=cern.ch, CN=Akos Frohner — user information

Subject Public Key Info: [...] — same as in the request

Certificate Details 2.

example

X509v3 extensions:

Netscape Base Url: — Certificate extensions

http://home.cern.ch/globus/ca

Netscape Cert Type:

SSL Client, S/MIME, Object Signing — client/user certificate

Netscape Comment:

For DataGrid use only

Netscape Revocation Url:

http://home.cern.ch/globus/ca/cern.crl.pem — CRL information

Netscape CA Policy Url:

http://home.cern.ch/globus/ca/CPS.pdf — Policy information

Signature Algorithm: md5WithRSAEncryption

54:8b:66:e8:dc:60:cd:e3:dc:43:a7:c9:3a:12:2c:73:05:13: [...] — Signature on the information

Preparation for Registration

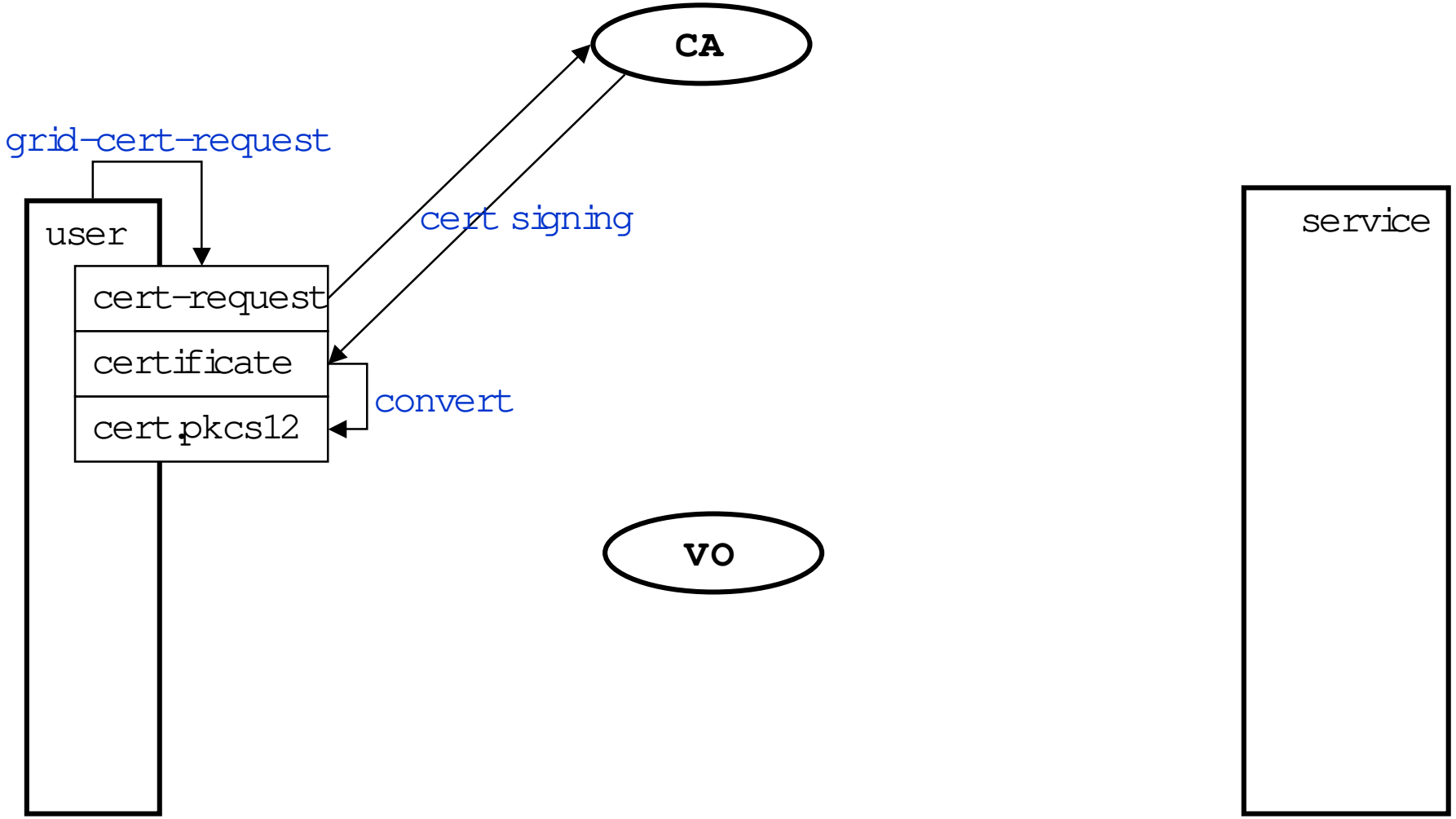

Registration/Authorization

User registration in an EDG Virtual Organisation

- convert your certificate:
  - **openssl pkcs12 -export -in ~/.globus/usercert.pem -inkey ~/.globus/userkey.pem -out user.p12 -name 'Joe Smith'**
- import your certificate in your browser
- sign the usage guidelines: https://marianne.in2p3.fr/cgi-bin/datagrid/register/account.pl
- ask an account from your VO administrator by email

-> You are registered in the VO-LDAP server and have a user account.

Registration

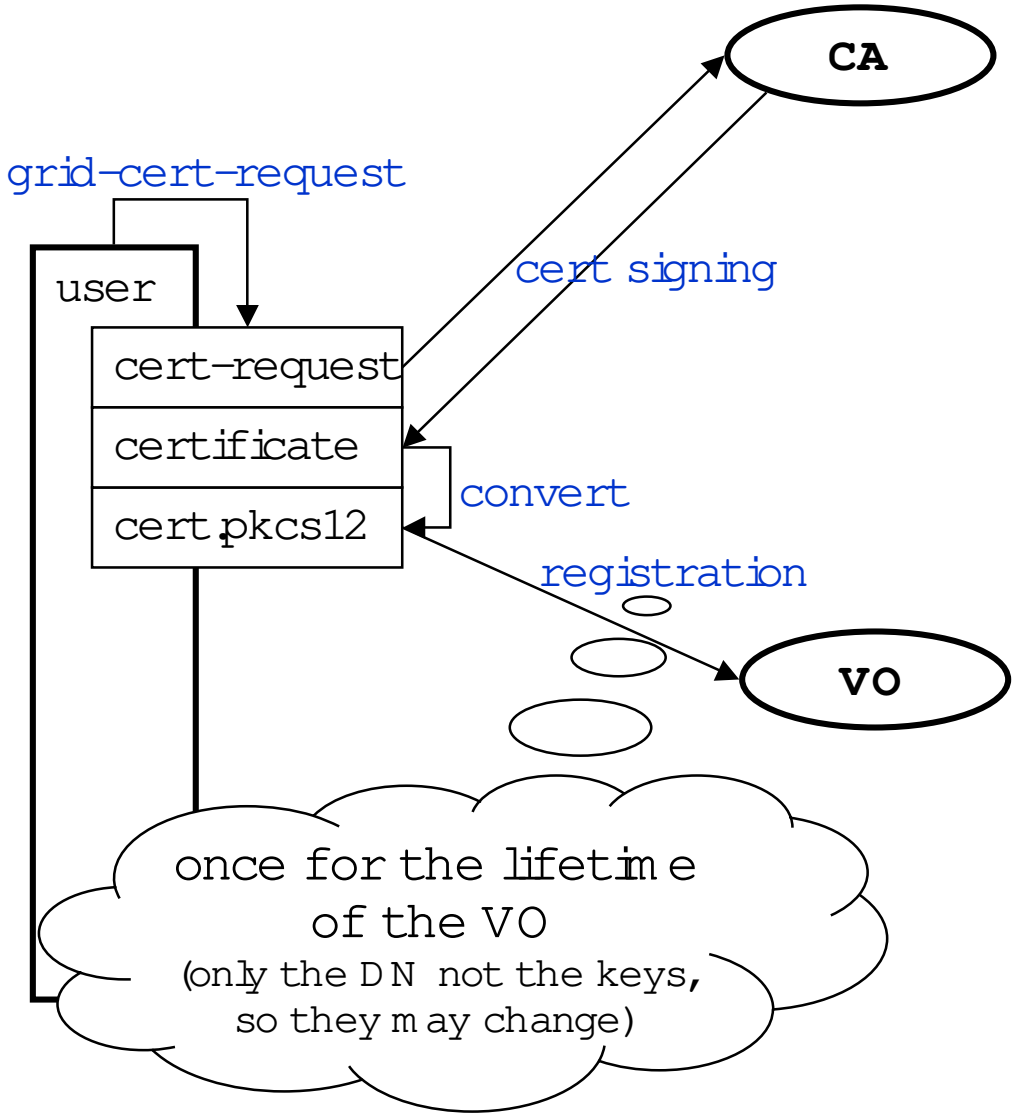

Account Registration

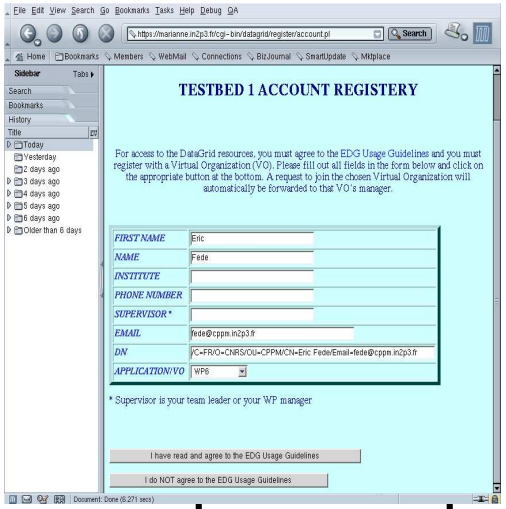

Usage guidelines

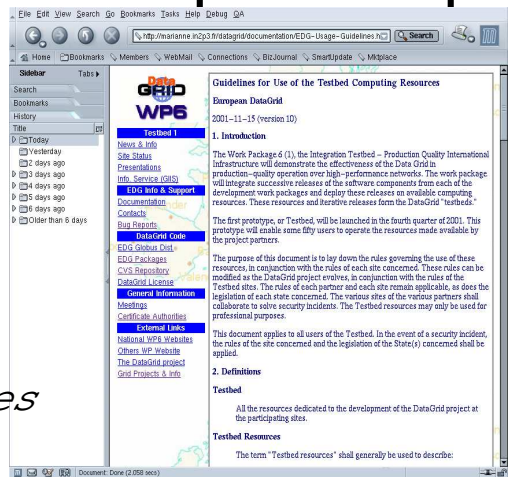

Starting a Session

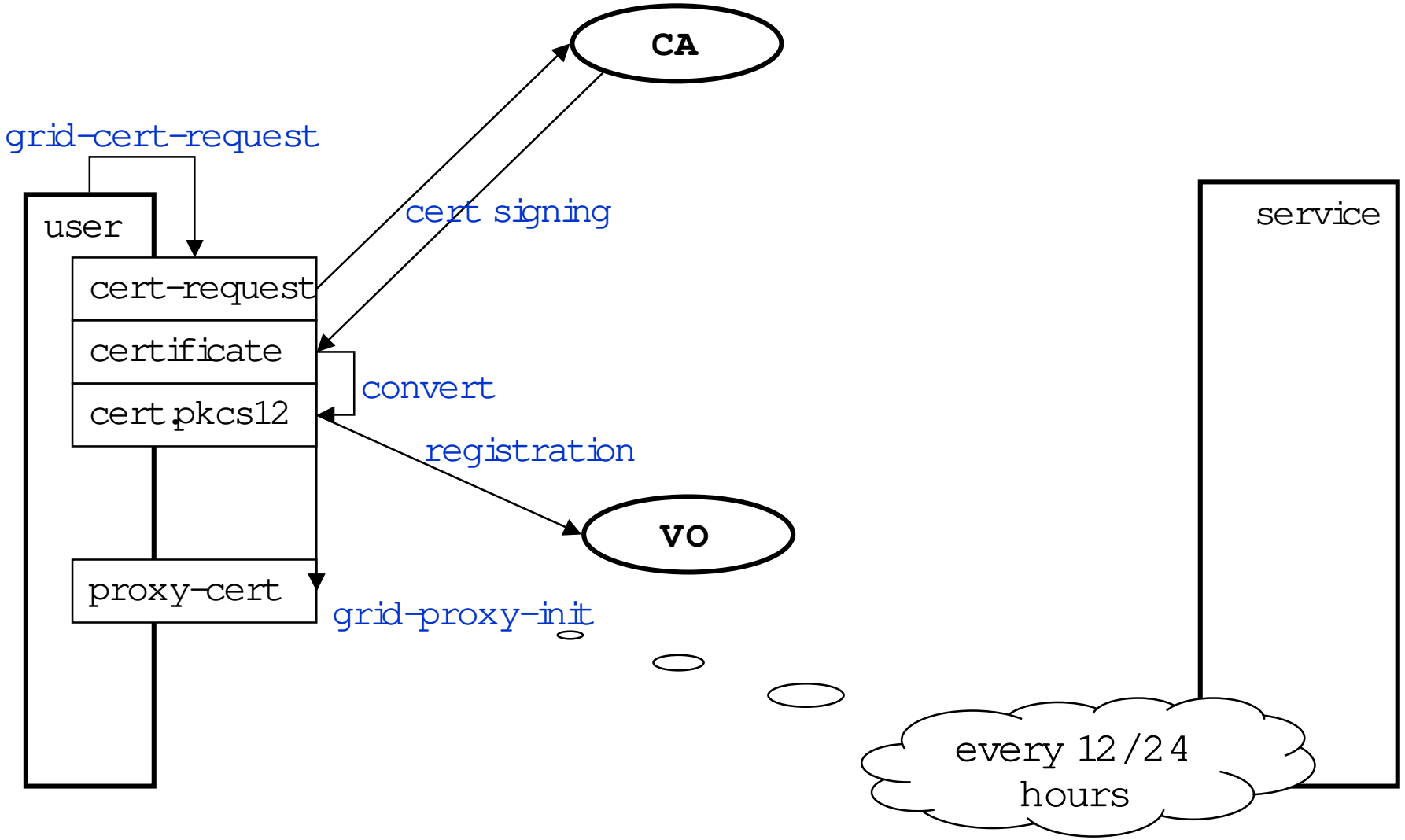

Usage

You must have a valid certificate from a trusted CA!

- „login": **grid-proxy-init**

  short lifetime certificate: 24 hours

  ```
  Enter PEM pass phrase:
  ..........................+++++
  ..................................+++++
  ```

- checking the proxy: **grid-proxy-info -subject**

  ```
  /O=Grid/O=CERN/OU=cern.ch/CN=Akos Frohner/CN=proxy
  ```

- „logout": **grid-proxy-destroy**

-> use the grid services

Proxy Certificate details

example

- **openssl x509 -in /tmp/x509up_u`id -u` -text**

```
Data:                                                          [...]
    Issuer: O=Grid, O=CERN, OU=cern.ch, CN=Akos Frohner        Issuer is the user not a CA
    Validity
        Not Before: Jul 22 09:44:39 2002 GMT                   short time certificate: 1 day
        Not After : Jul 22 21:49:39 2002 GMT
    Subject: O=Grid, O=CERN, OU=cern.ch, CN=Akos Frohner, CN=proxy    extra tag: proxy
    Subject Public Key Info:                                   new (shorter) key(s)
        Public Key Algorithm: rsaEncryption
        RSA Public Key: (512 bit)
            Modulus (512 bit):
                00:e9:7c:f4:d0:5d:8a:4c:91:8b:df:a7:16:78:1f:  [...]
            Exponent: 65537 (0x10001)
    X509v3 extensions:                                         [...] same as earlier
Signature Algorithm: md5WithRSAEncryption                      [...] signed by the user
```

Certificate Request for a Host

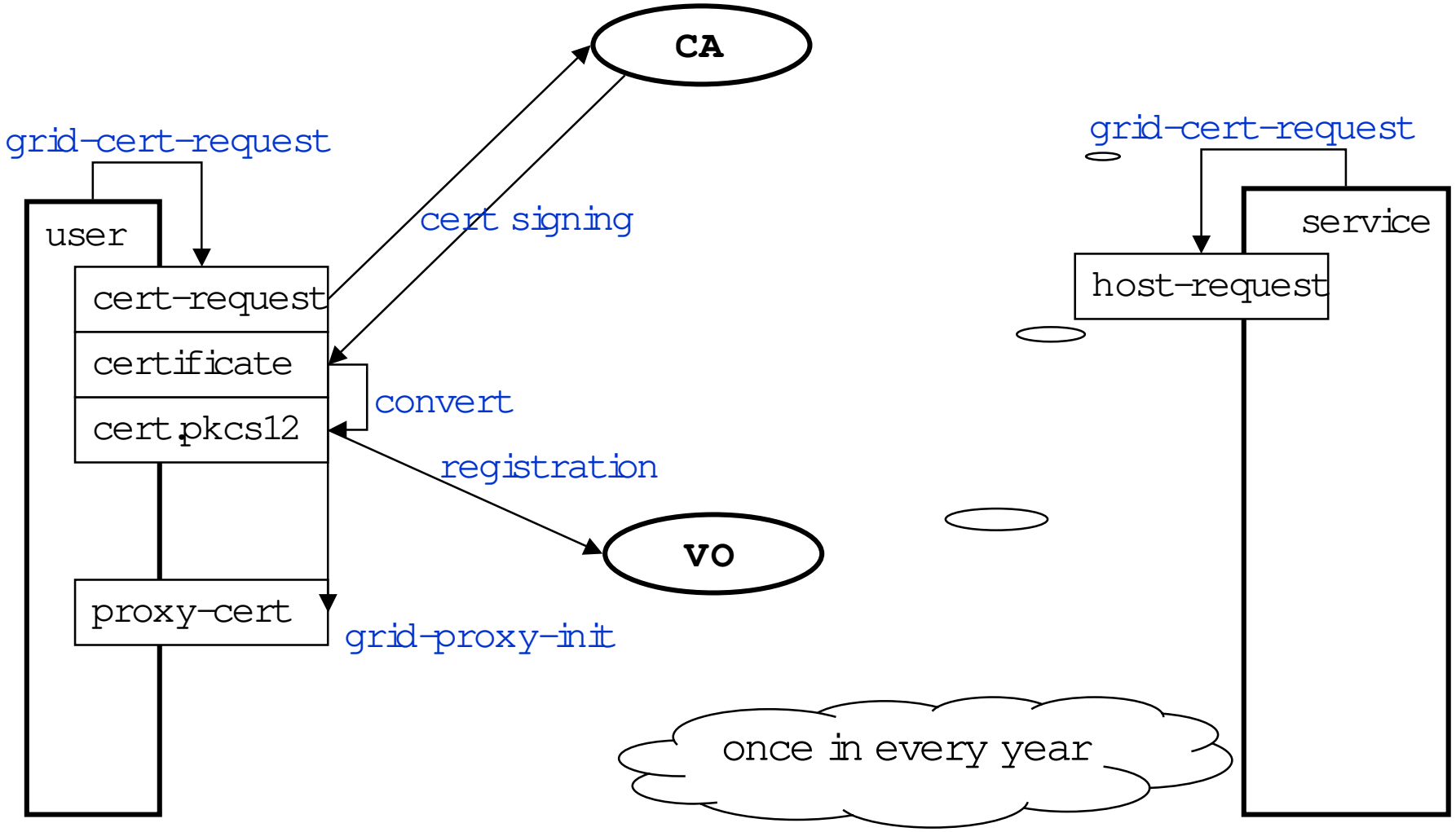

Signing the Certificate

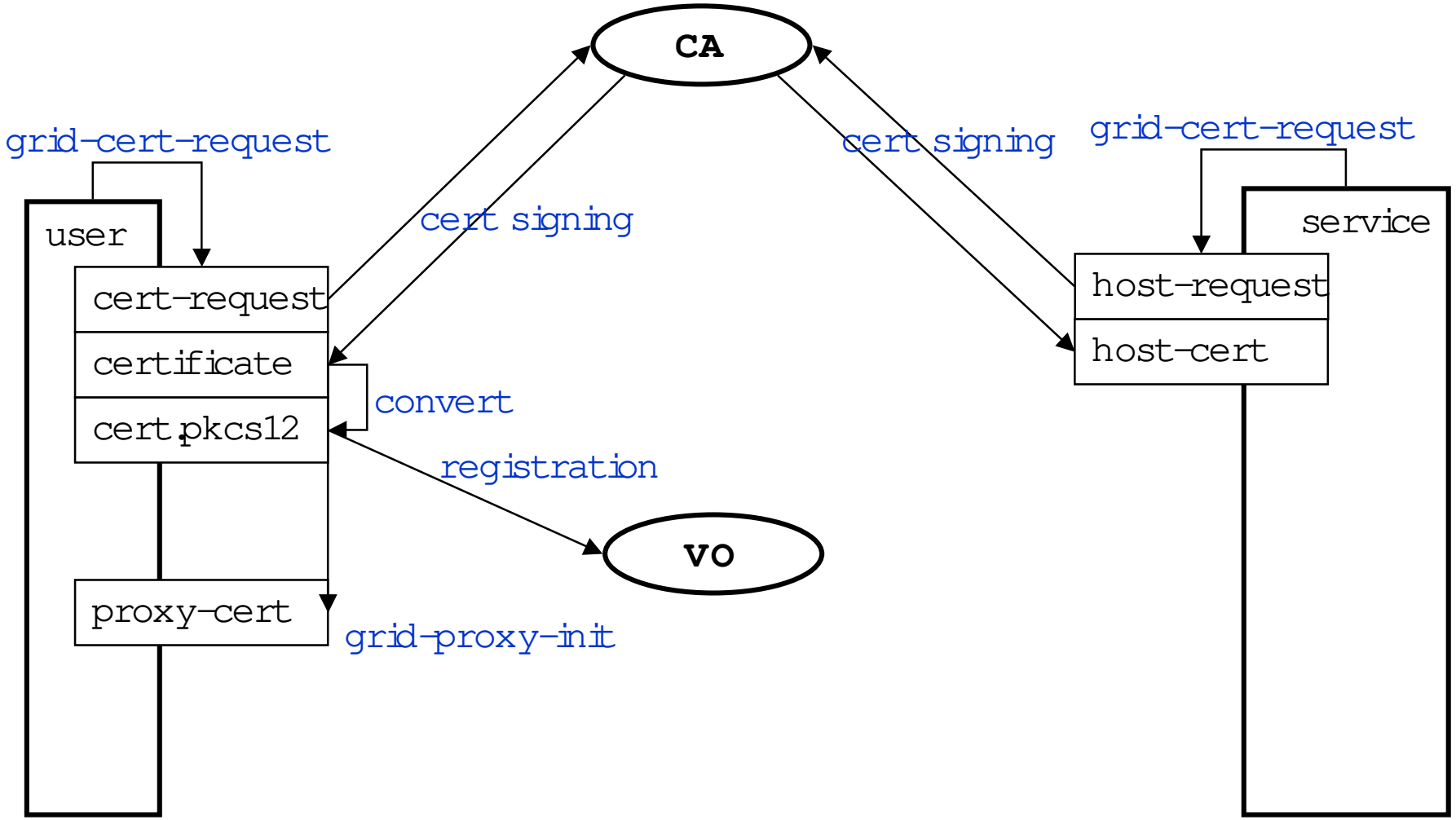

Configuration on the Server

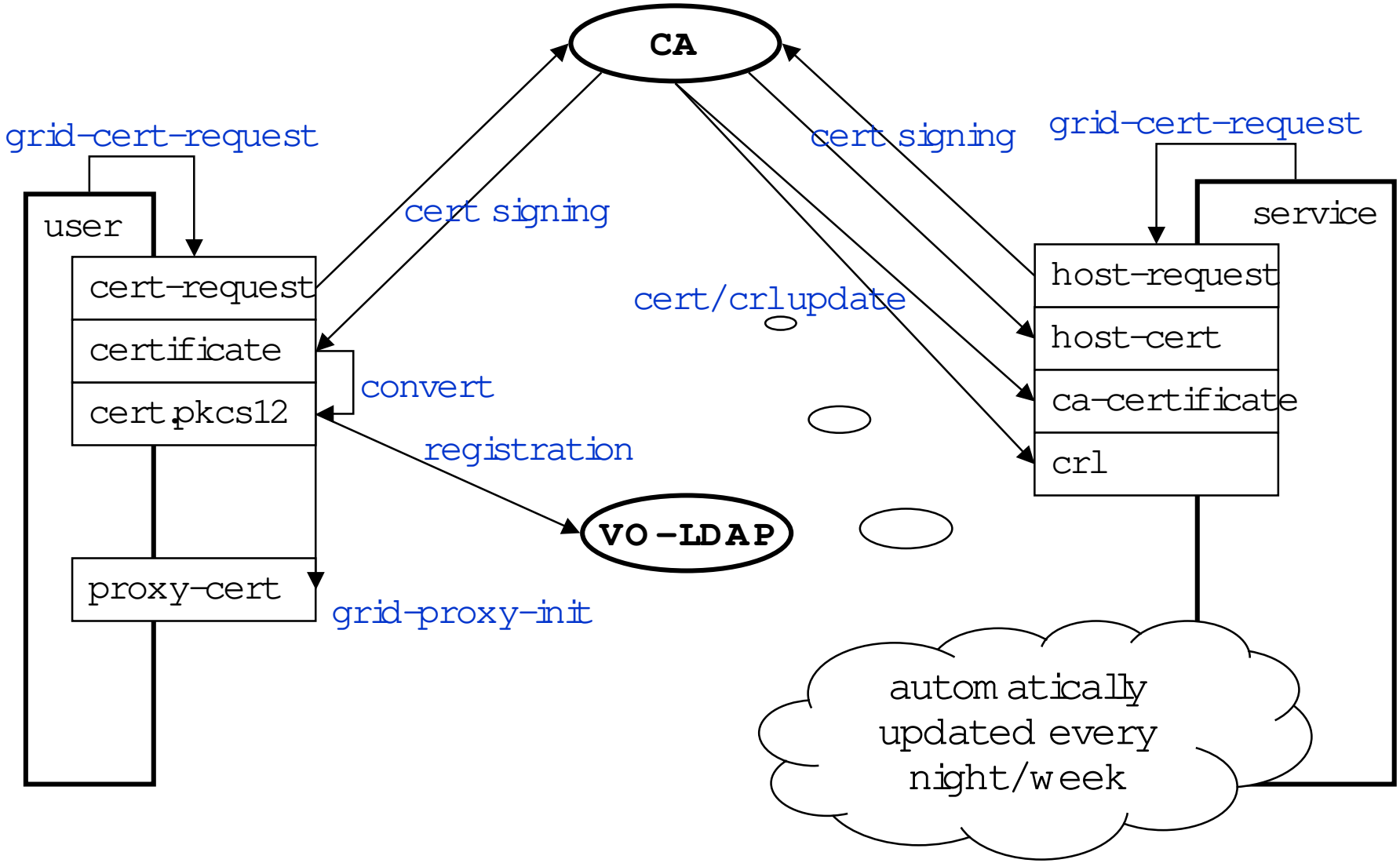

Service

info

You must have the trusted CA certificates in files and the VO-LDAP server(s) URL configured.

- registering a trusted CA
  - /etc/grid-security/certificates: hashed cert, crl and url
- generating a gridmap file: mkgridmap
  - /etc/grid-security/gridmap: DN -> userid/gid mapping
- generating host/service certificate:
  grid-cert-request -host
  (see user certificates for the whole process)

Start the service!

Service: CA Certificates

example

- **ls /etc/grid-security/certificates**

0ed6468a.0	c35c1972.0	d64ccb53.0
0ed6468a.crl_url	c35c1972.crl_url	d64ccb53.crl_url
0ed6468a.r0	c35c1972.r0	d64ccb53.r0
0ed6468a.signing_policy	c35c1972.signing_policy	d64ccb53.signing_policy
16da7552.0	cf4ba8c8.0	df312a4e.0
16da7552.crl_url	cf4ba8c8.crl_url	df312a4e.crl_url
16da7552.r0	cf4ba8c8.r0	df312a4e.r0
16da7552.signing_policy	cf4ba8c8.signing_policy	df312a4e.signing_policy

- **cat c35c1972.crl_url**

http://globus.home.cern.ch/globus/ca/cern.crl.pem

Service: a certificate

example

- **cat c35c1972.signing_policy**

```
# EACL CERN CA
access_id_CA            X509                    '/C=CH/O=CERN/CN=CERN CA'
pos_rights              globus      CA:sign
cond_subjects           globus      '"/C=ch/O=CERN/*" "/C=CH/O=CERN/*"
   "/O=Grid/O=CERN/*" "/O=CERN/O=Grid/"'
```

- **openssl x509 -in c35c1972.0 -text**

```
    Issuer: C=CH, O=CERN, CN=CERN CA        [...]   the issuer and the subject are
  the same
    Subject: C=CH, O=CERN, CN=CERN CA       [...]   self signed certificate
    X509v3 extensions:
      X509v3 Basic Constraints: critical
        CA:TRUE                             [...]   it may be used to sign other certificates
      Netscape Cert Type:
        SSL CA, S/MIME CA, Object Signing CA        it is a CA  certificate
```

Service: Revocation List

example

- **openssl crl -in c35c1972.r0 -text**

Certificate Revocation List (CRL):

Version 1 (0x0)

Signature Algorithm: md5WithRSAEncryption

Issuer: /C=CH/O=CERN/CN=CERN CA — the issuer is the CA itself

Last Update: Jul 1 17:53:17 2002 GMT

Next Update: Aug 5 17:53:17 2002 GMT — next update: shall be checked

Revoked Certificates:

Serial Number: 5A — the revoced certificate's number

Revocation Date: May 24 16:45:52 2002 GMT

Signature Algorithm: md5WithRSAEncryption — Signature – as usual

Authorization Information

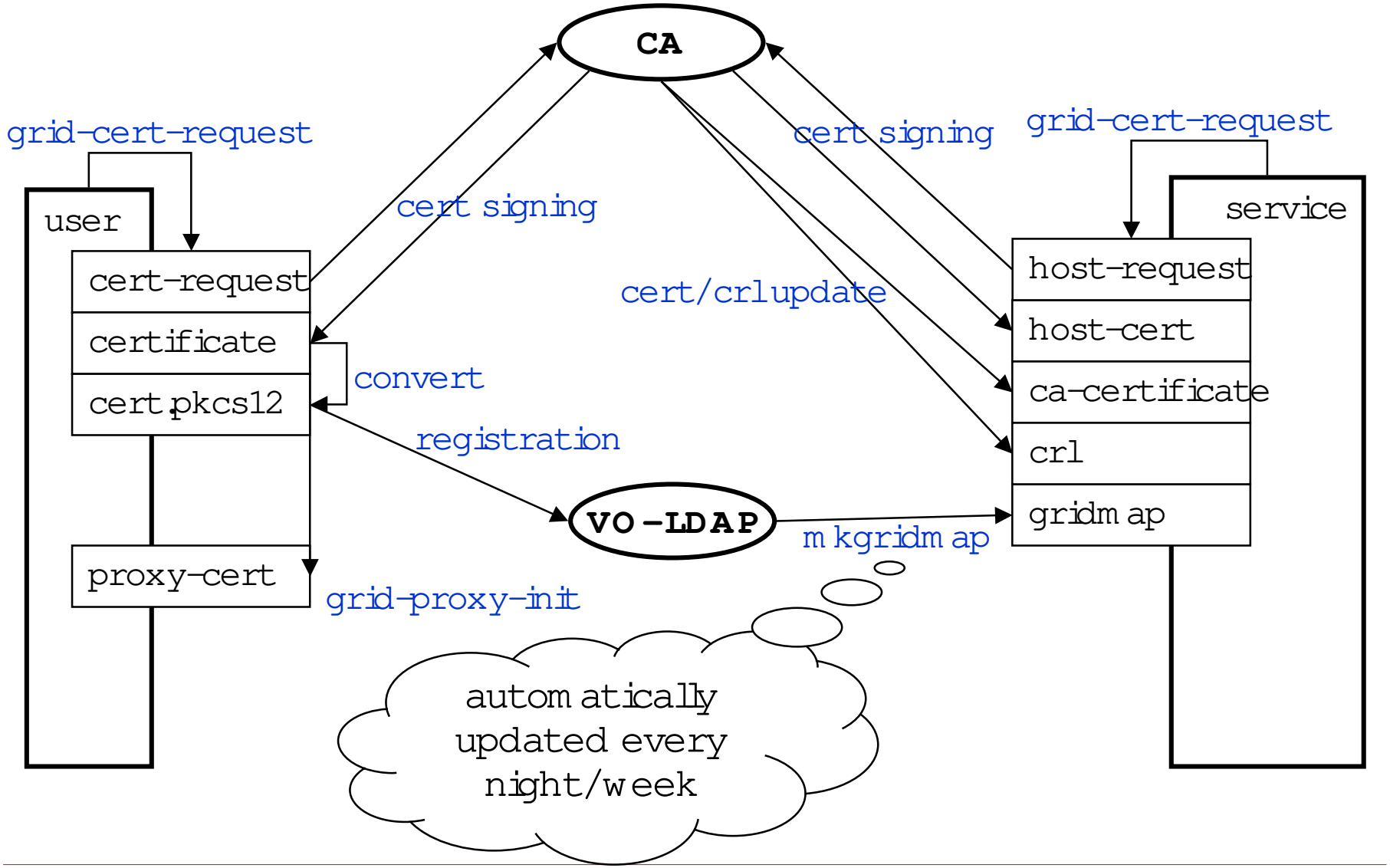

Gridmap file: configuration

example

- **cat /etc/grid-security/mkgridmap.conf**

```
auth ldap://marianne.in2p3.fr/ou=People,o=testbed,dc=eu-datagrid,dc=org
# EDG Standard Virtual Organizations
group ldap://grid-vo.nikhef.nl/ou=testbed1,o=alice,dc=eu-datagrid,dc=org .alice
group ldap://grid-vo.nikhef.nl/ou=testbed1,o=atlas,dc=eu-datagrid,dc=org .atlas
group ldap://grid-vo.nikhef.nl/ou=tb1users,o=cms,dc=eu-datagrid,dc=org .cms
group ldap://grid-vo.nikhef.nl/ou=tb1users,o=lhcb,dc=eu-datagrid,dc=org .lhcb
group ldap://grid-vo.nikhef.nl/ou=tb1users,o=biomedical,dc=eu-datagrid,dc=org .biome
group ldap://grid-vo.nikhef.nl/ou=tb1users,o=earthob,dc=eu-datagrid,dc=org .eo
group ldap://marianne.in2p3.fr/ou=ITeam,o=testbed,dc=eu-datagrid,dc=org .iteam
group ldap://marianne.in2p3.fr/ou=wp6,o=testbed,dc=eu-datagrid,dc=org .wpsix
default_lcluser AUTO
```

Generated Gridmap file

example

- **cat /etc/grid-security/gridmap**

"/O=Grid/O=Globus/OU=cern.ch/CN=Geza Odor" odor

"/O=Grid/O=CERN/OU=cern.ch/CN=Pietro Paolo Martucci" pietro

"/C=IT/O=INFN/L=Bologna/CN=Franco Semeria/Email=Franco.Semeria@bo.infn.it" aliprod

"/C=IT/O=INFN/L=Bologna/CN=Marisa Luvisetto/Email=Marisa.Luvisetto@bo.infn.it" aliprod

"/O=Grid/O=CERN/OU=cern.ch/CN=Bob Jones" jones

"/O=Grid/O=CERN/OU=cern.ch/CN=Brian Tierney" btierney

"/O=Grid/O=CERN/OU=cern.ch/CN=Tofigh Azemoon" azemoon

"/C=FR/O=CNRS/OU=LPC/CN=Yannick Legre/Email=legre@clermont.in2p3.fr" yannick

Using a Service

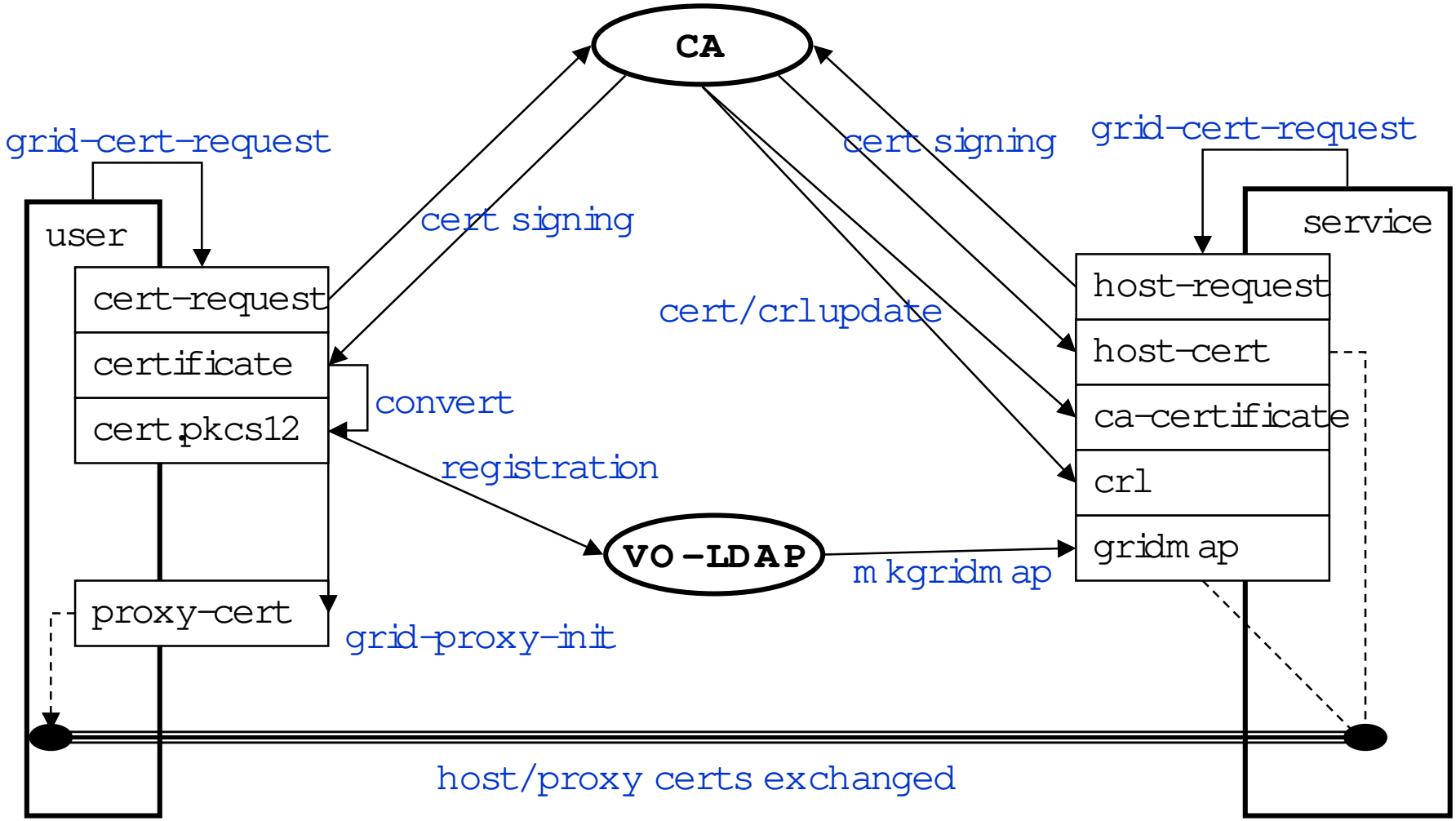

Summary

Obtaining a certificate from a CA

see http://marianne.in2p3.fr/datagrid/ca/ for CAs

- new certificate: **grid-cert-request**
  - new files in ~/.globus: usercert_request.pem userkey.pem
- mail it to the appropriate CA (e.g. cern-globus-ca@cern.ch)
- save the answer
  - ~/.globus/usercert.pem
- new proxy certificate: **grid-proxy-init**
  - /tmp/x509up_u<uid>

-> You have a certificate signed by an EDG CA.

Further Information

Grid

- EDG CAs: http://marianne.in2p3.fr/datagrid/ca
- Globus Security: http://www.globus.org/security/
- EDG WP2: http://grid-data-management.web.cern.ch/grid-data-management/security/
- EDG D7.5: http://edms.cern.ch/document/340234

Background

- GGF Security: http://www.gridforum.org/security/
- GSS-API: http://www.faqs.org/faqs/kerberos-faq/general/section-84.html
- IETF PKIX charter: http://www.ietf.org/html.charters/pkix-charter.html
- PKCS: http://www.rsasecurity.com/rsalabs/pkcs/index.html