Photon sensors for scintillator strips

Tohru Takeshita (shinshu univ.)
J/G-LC calorimeter group
(KEK,Kobe,Konan,Niigata,Shinshu,Tsukuba)
and DESY

J/G-LC cal. activities
MAPMT (reference)
APD/SiPM/HAPD/EBCCD/

J/G-LC cal. R/D activities

focused onto lead/scintillator sandwich cal.

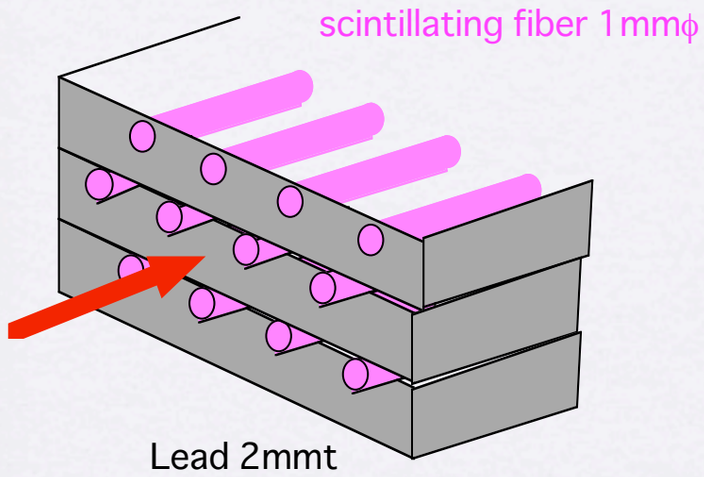

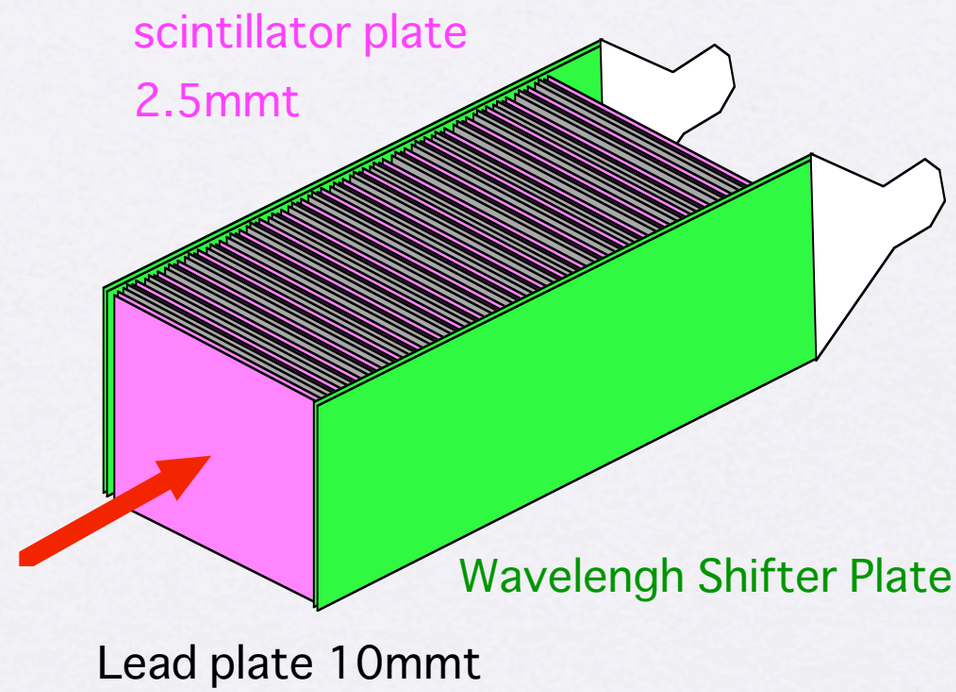

SPACAL **Zeus-type** **WLSF-R/O**

T.Takeshita LCWS04

J/G-LC cal. R/D activities contd

Fiber H-CAL

100layers

$1m^3$

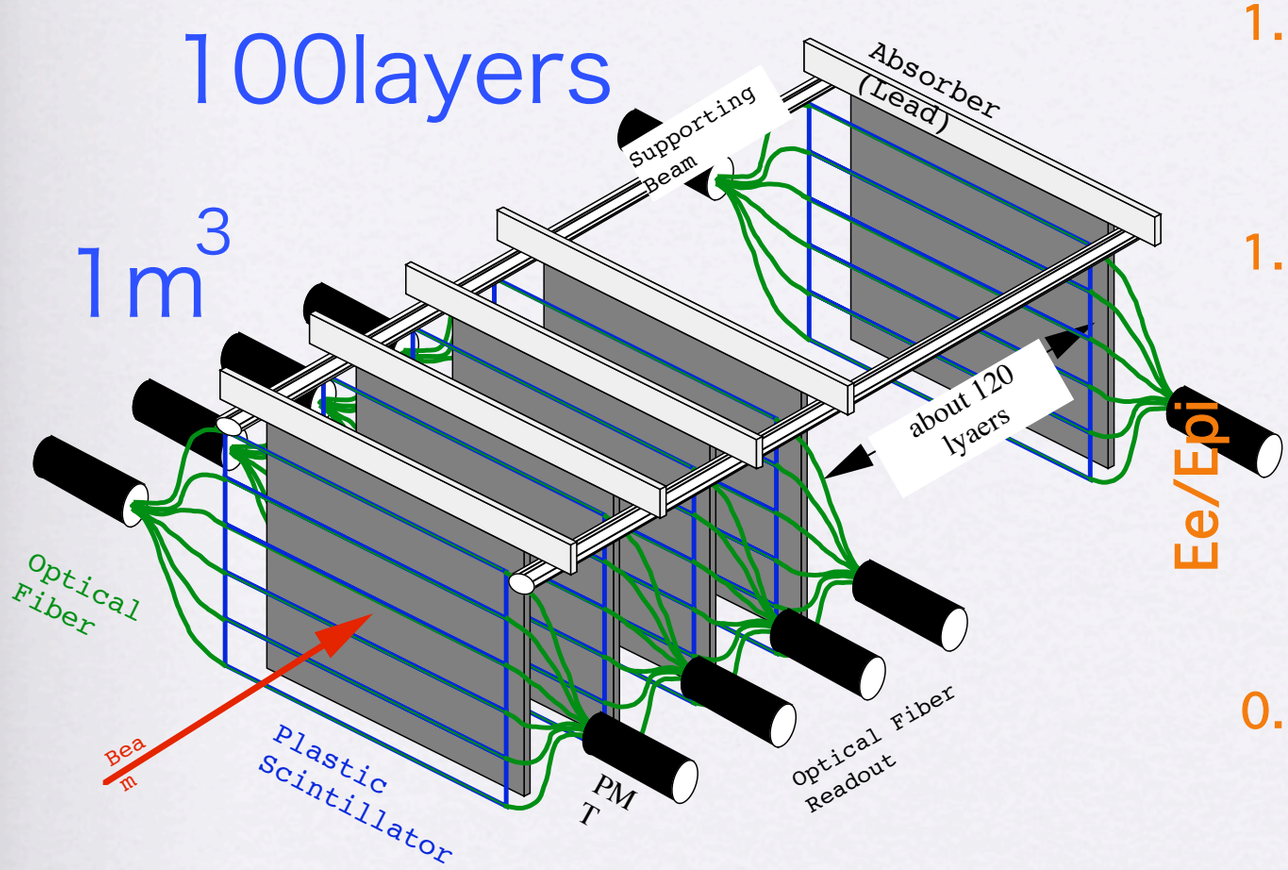

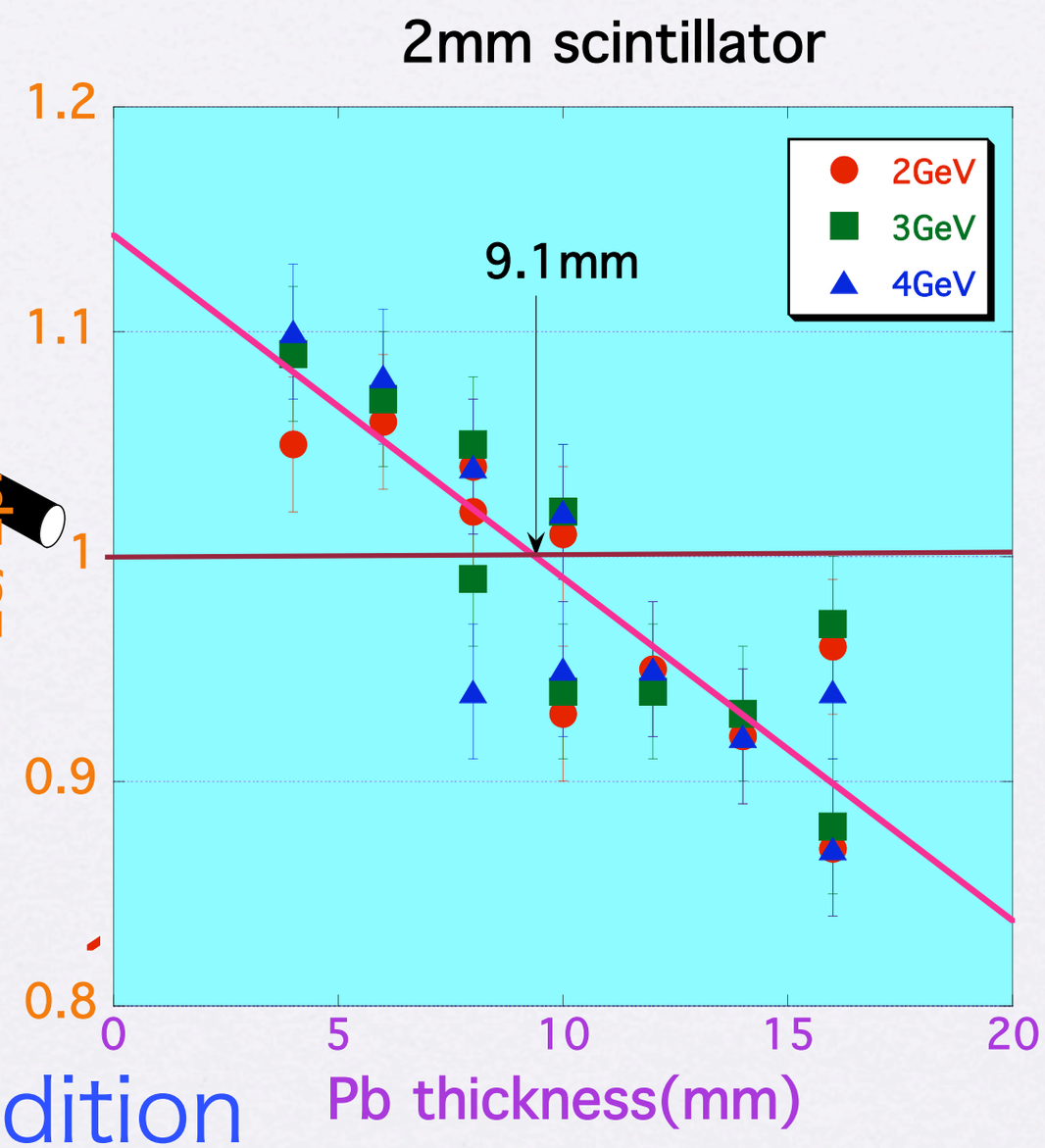

compensation condition

G/J-LC cal. R/D activities (contd.)

Tile/Fiber H-CAL

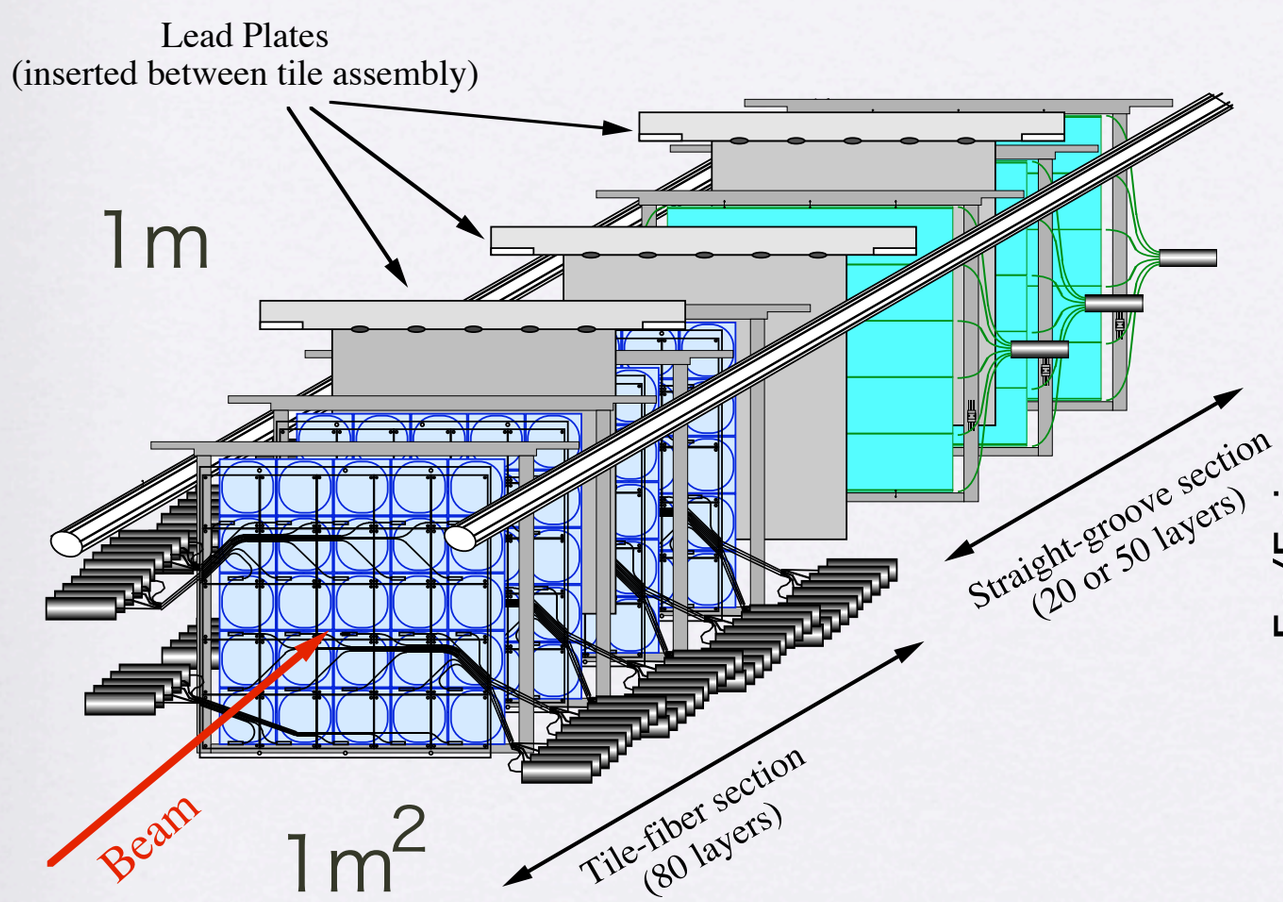

compensation:

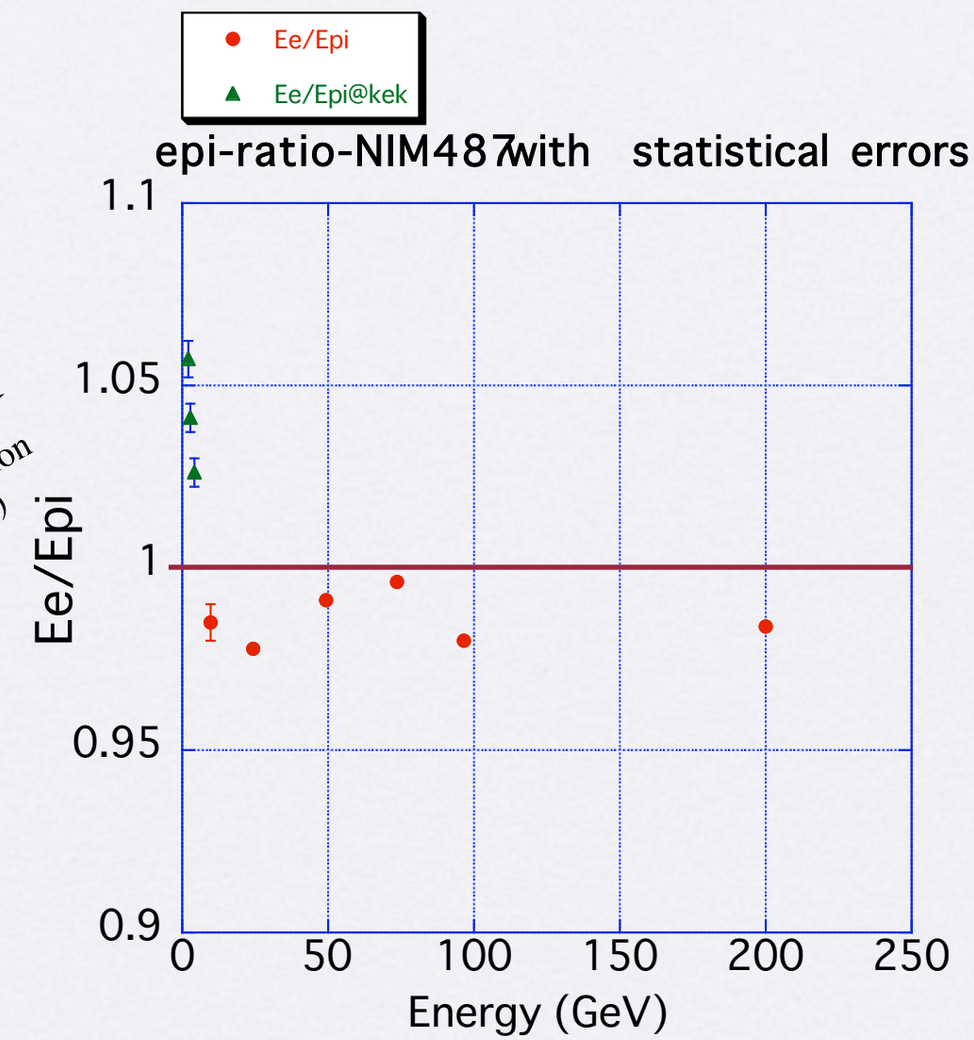

T.Takeshita LCWS04

photon sensors

requirements

- in the Magnetic field, need photon detector other than PMT's
- multi channel capability is important
- cost effective

candidate photon sensors

EBCCD: super multi-channel R/O

HAPD: multi-Fiber R/O

SiPM: small and low cost R/O

digital cal. R/O ?

scintillator strip det.

to improve position resolution of Tiles

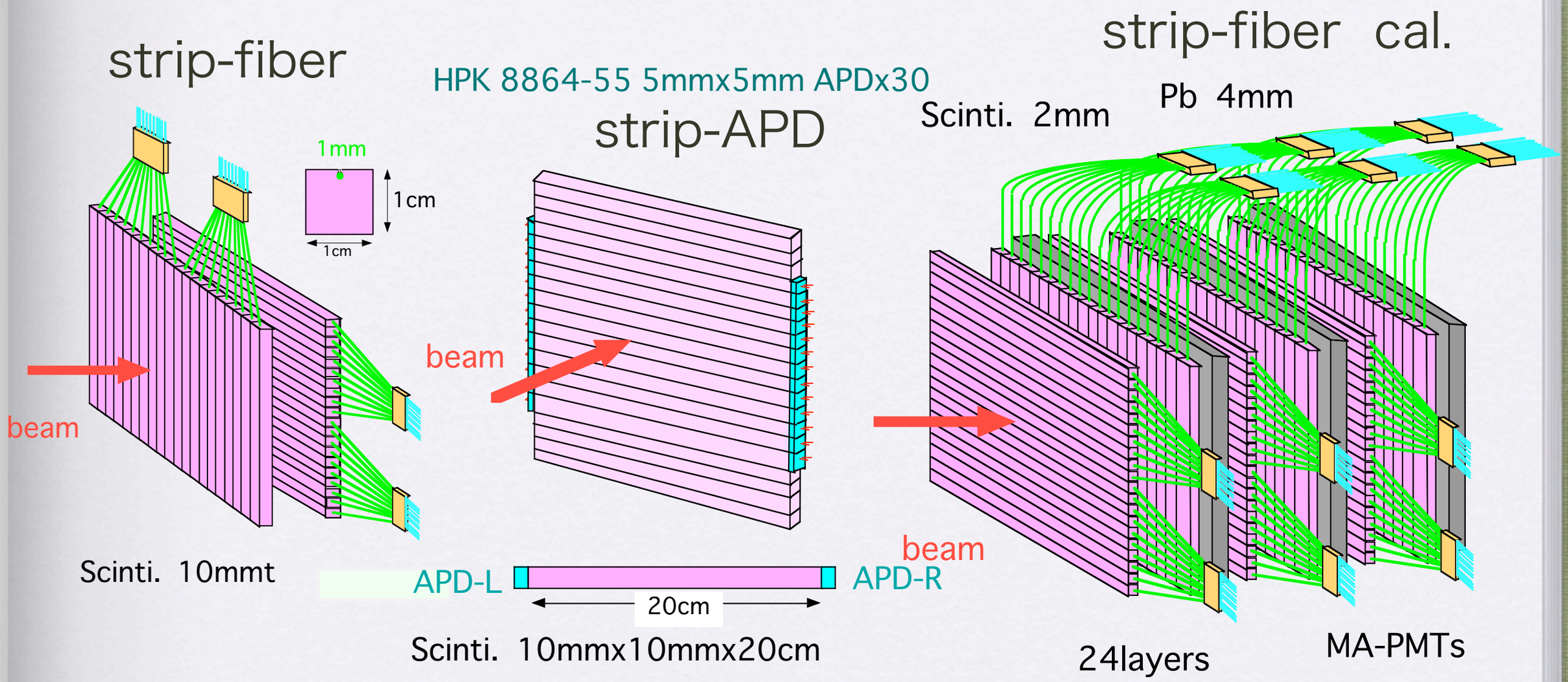

most data are taken on March/2004

reference detector

strip EM-calorimeter

with MAPMT R/O thickness:0.2x4=0.8cm

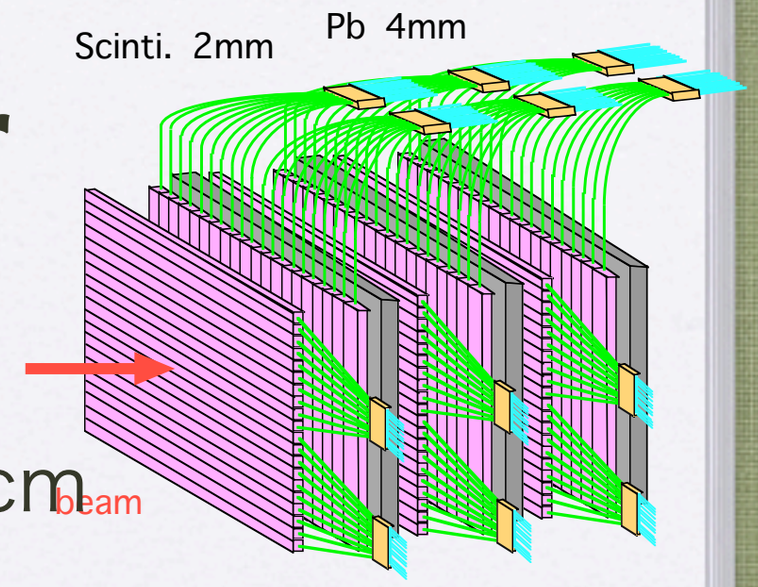

1SL

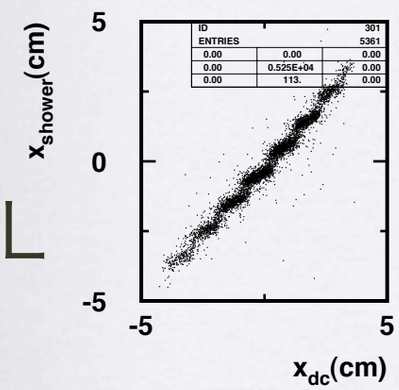

4SL

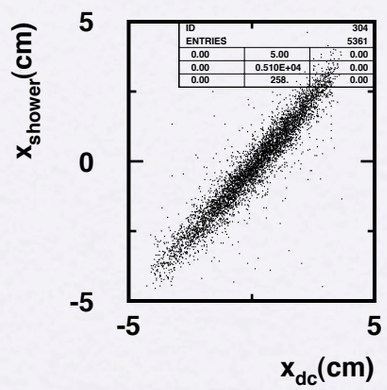

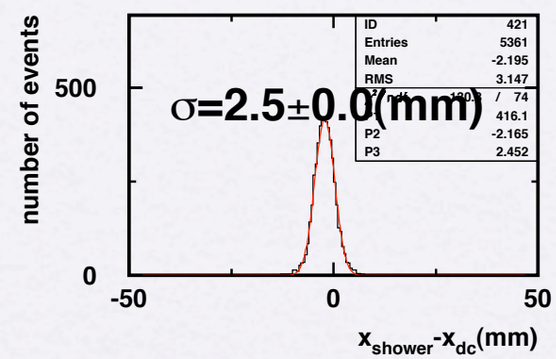

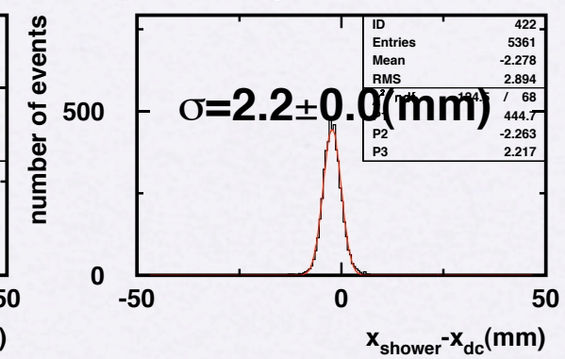

2SL

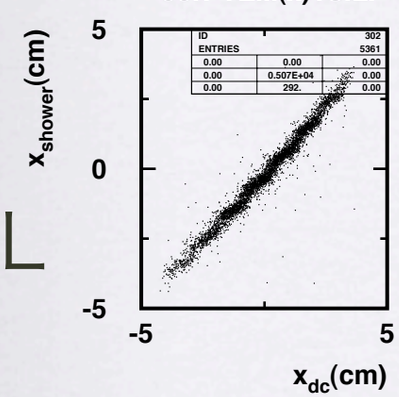

5SL

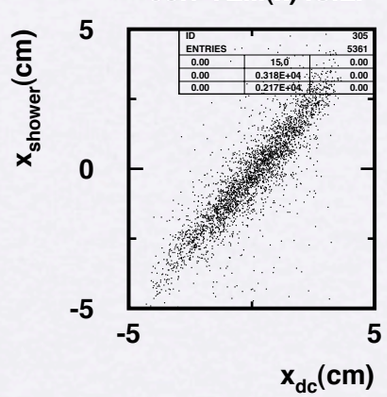

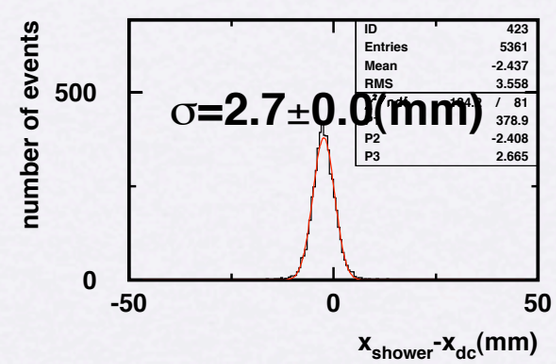

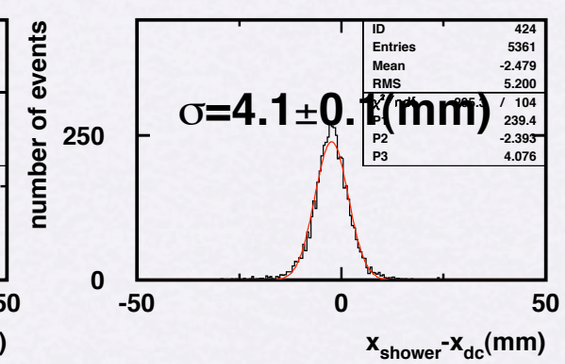

3SL

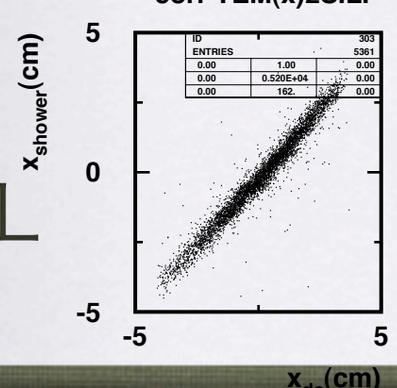

6SL

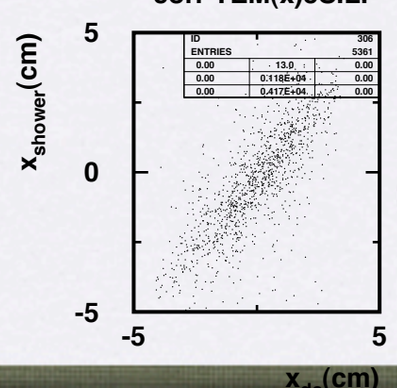

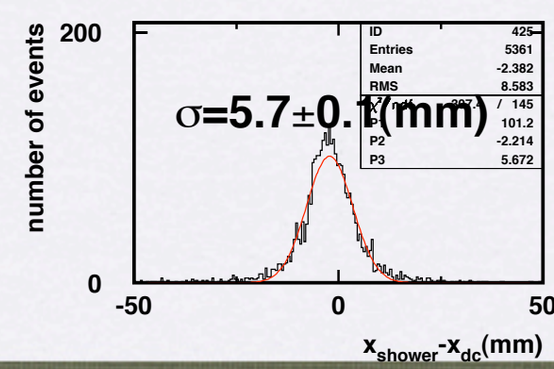

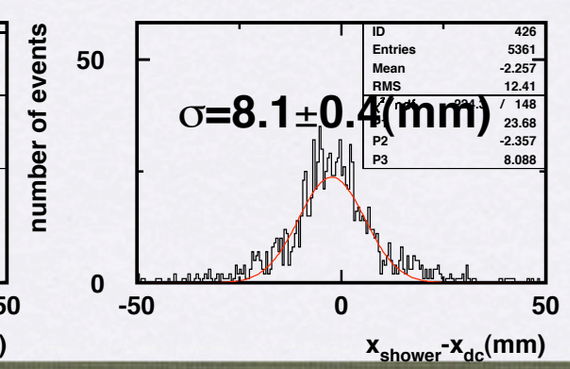

reference detector

strip EM-calorimeter

with MAPMT R/O thickness:0.2x4=0.8cm

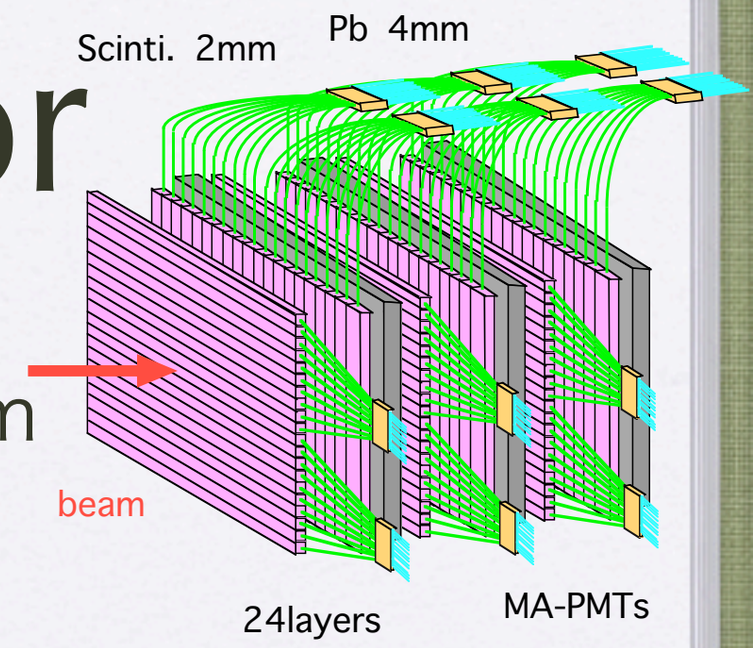

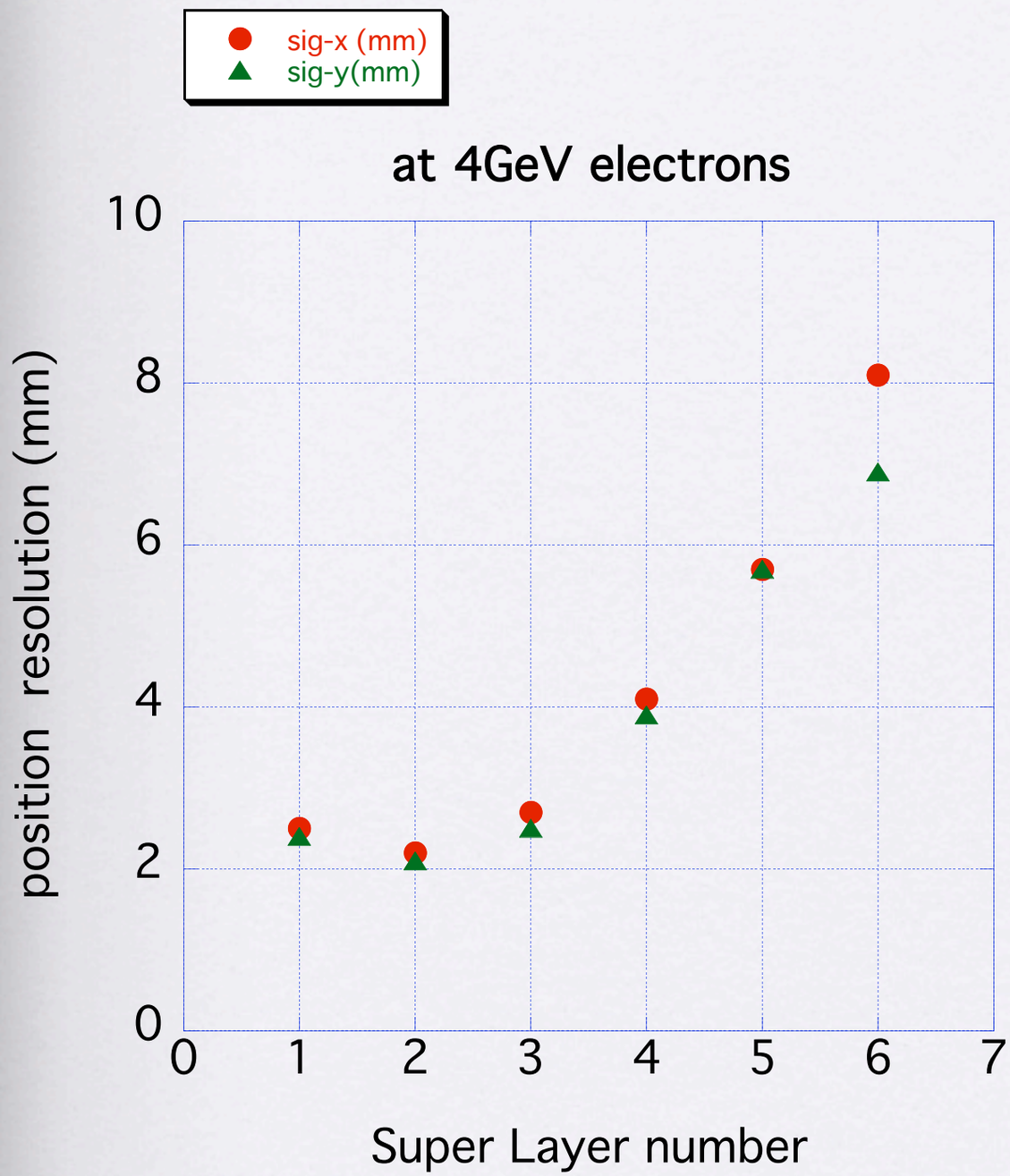

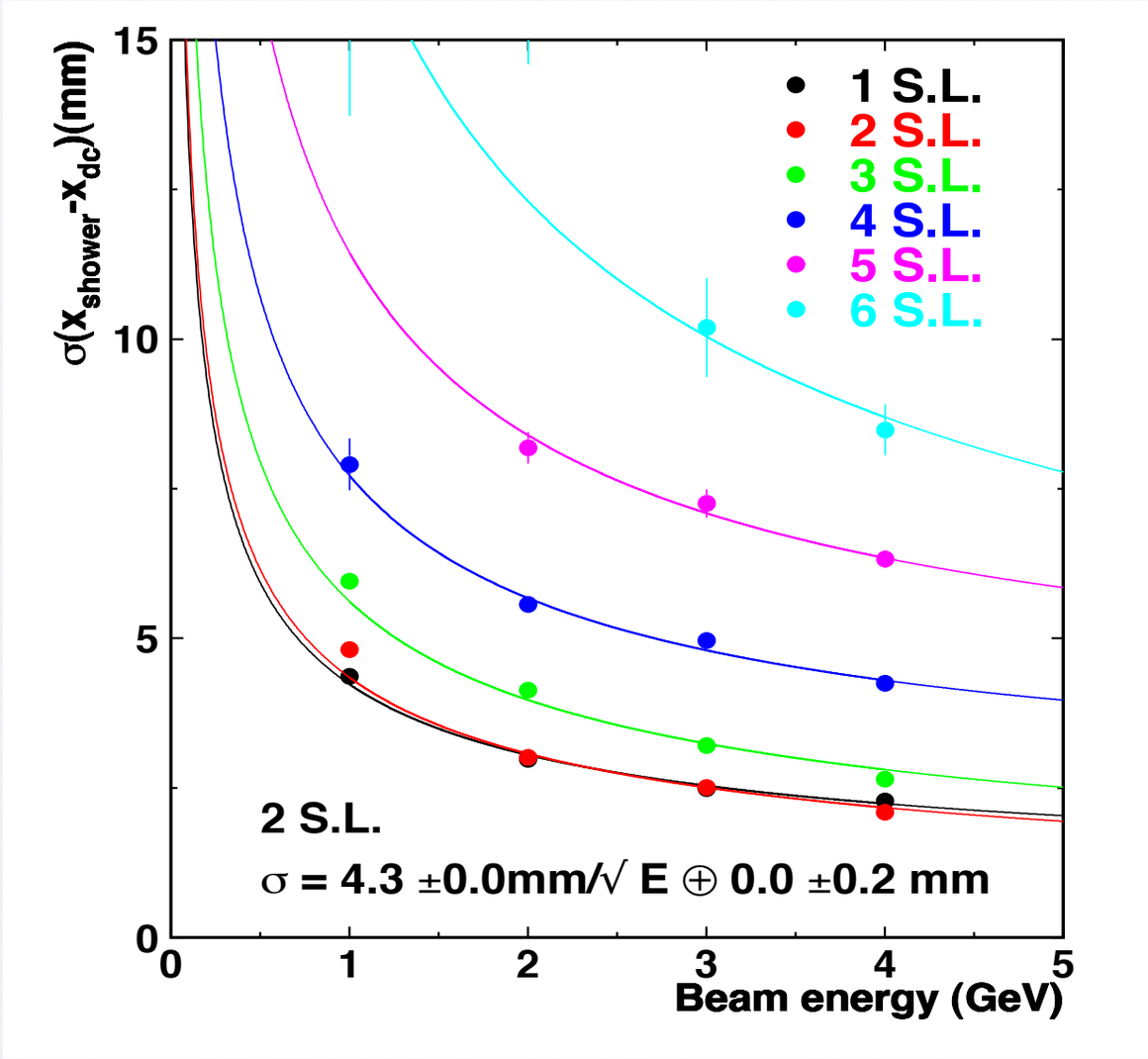

strip fiber detector

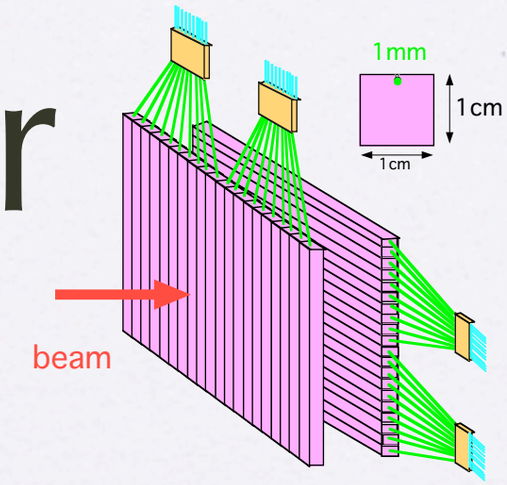

Multi -Anode PMT R/O

thickness:1cm

Scinti. 10mmt

4GeV electrons

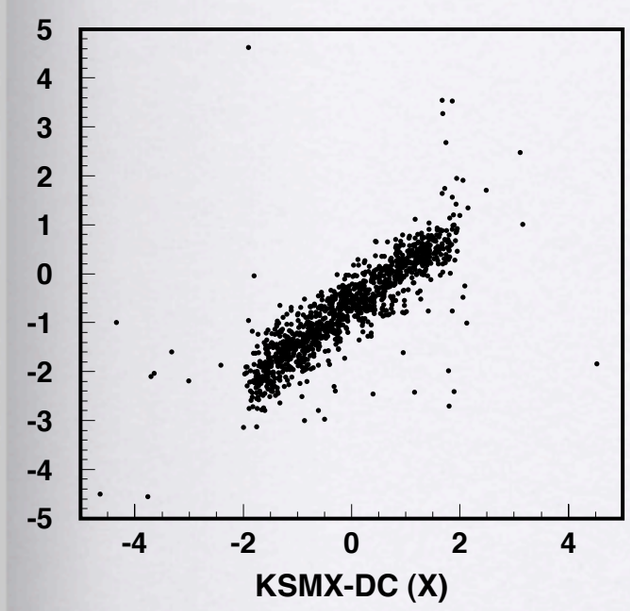

X(DC)

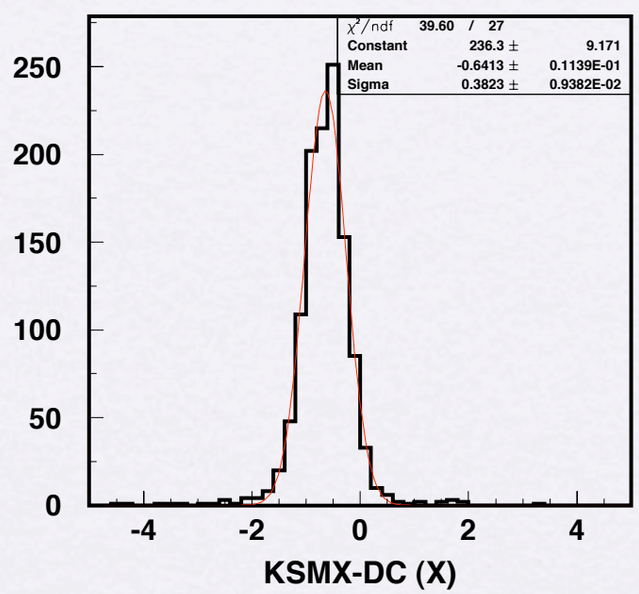

X(strip)-X(DC)

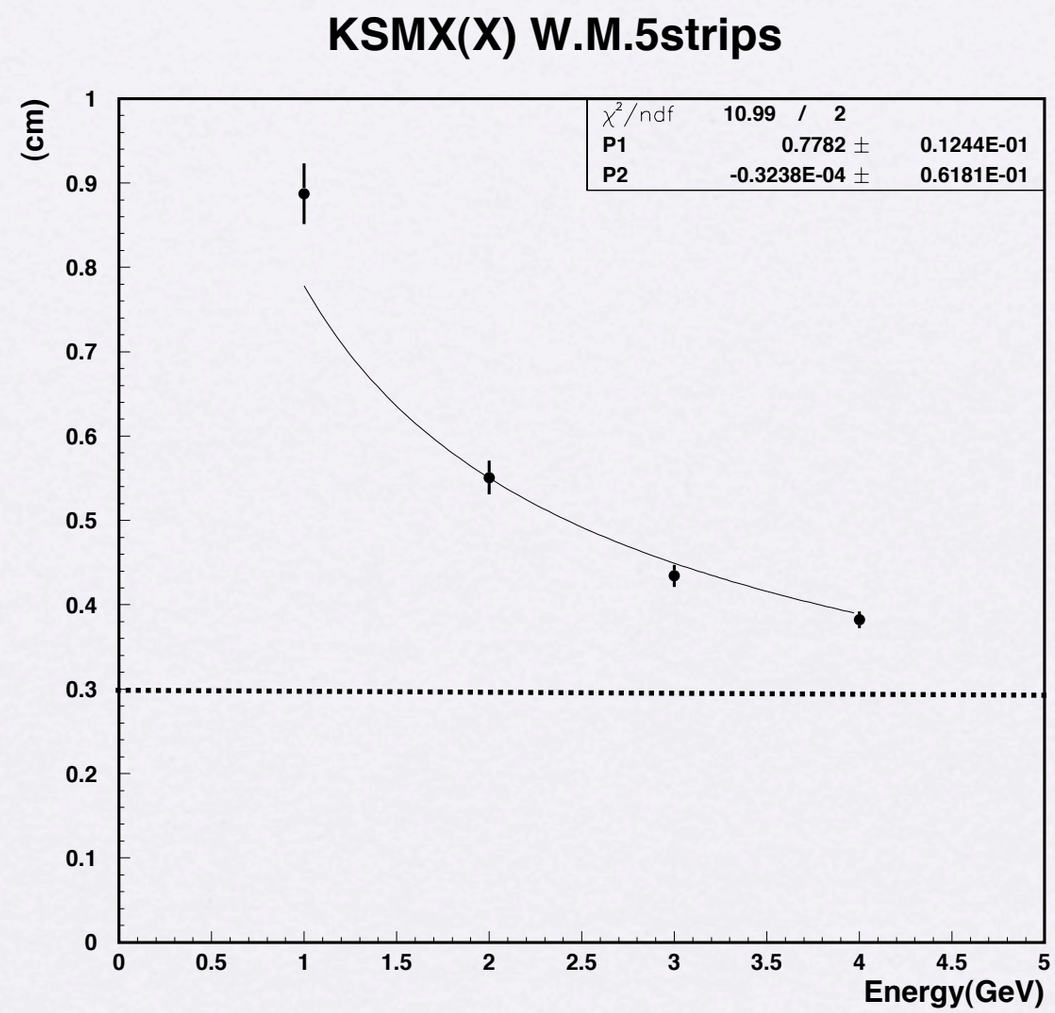

Direct coupled APD R/O

HPK 8864-55 5mmx5mm APDx30

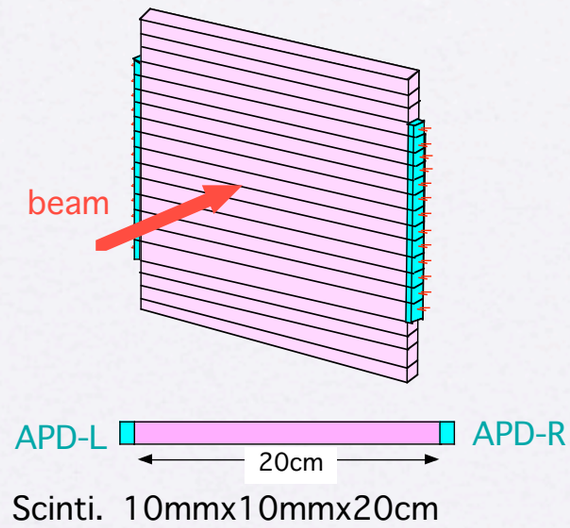

thickness:1cm

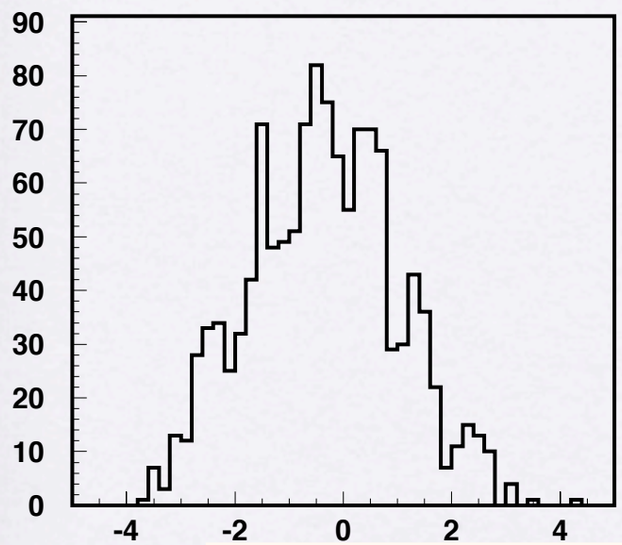

X(APD-strip)

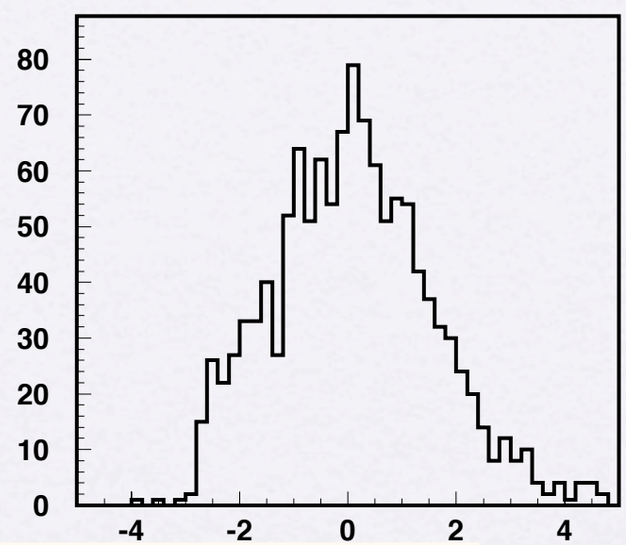

X(DC)

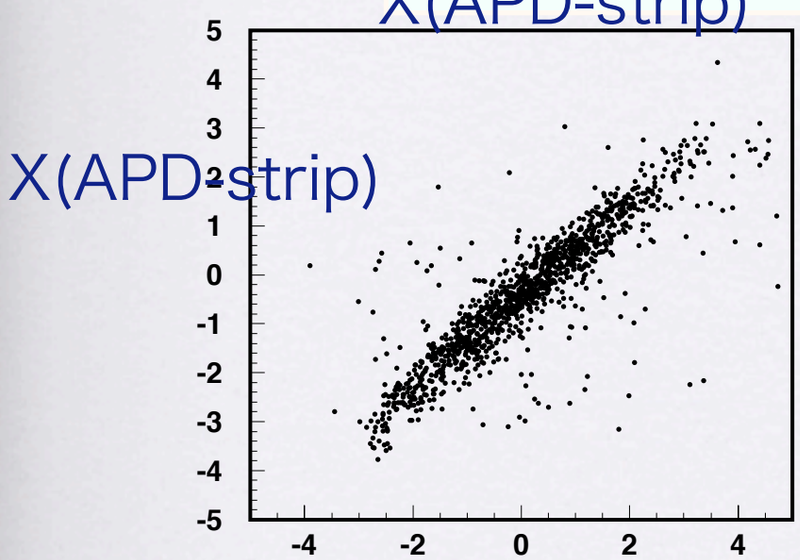

X(APD-strip)

X(DC)

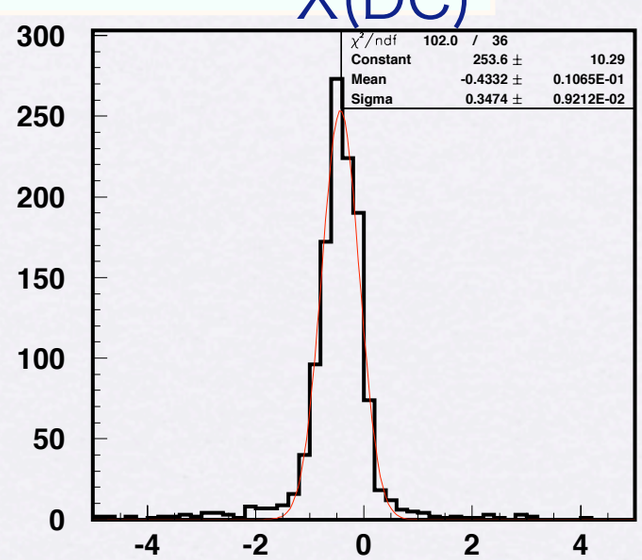

X(APD-strip) -X(DC)

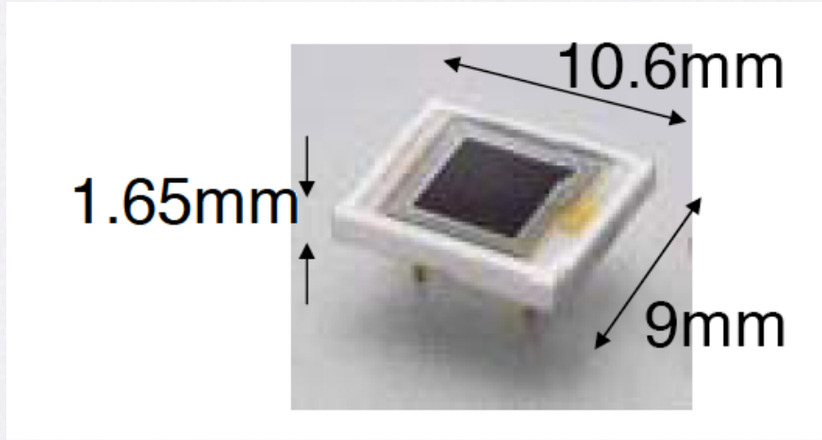

Direct coupled APD R/O contd.

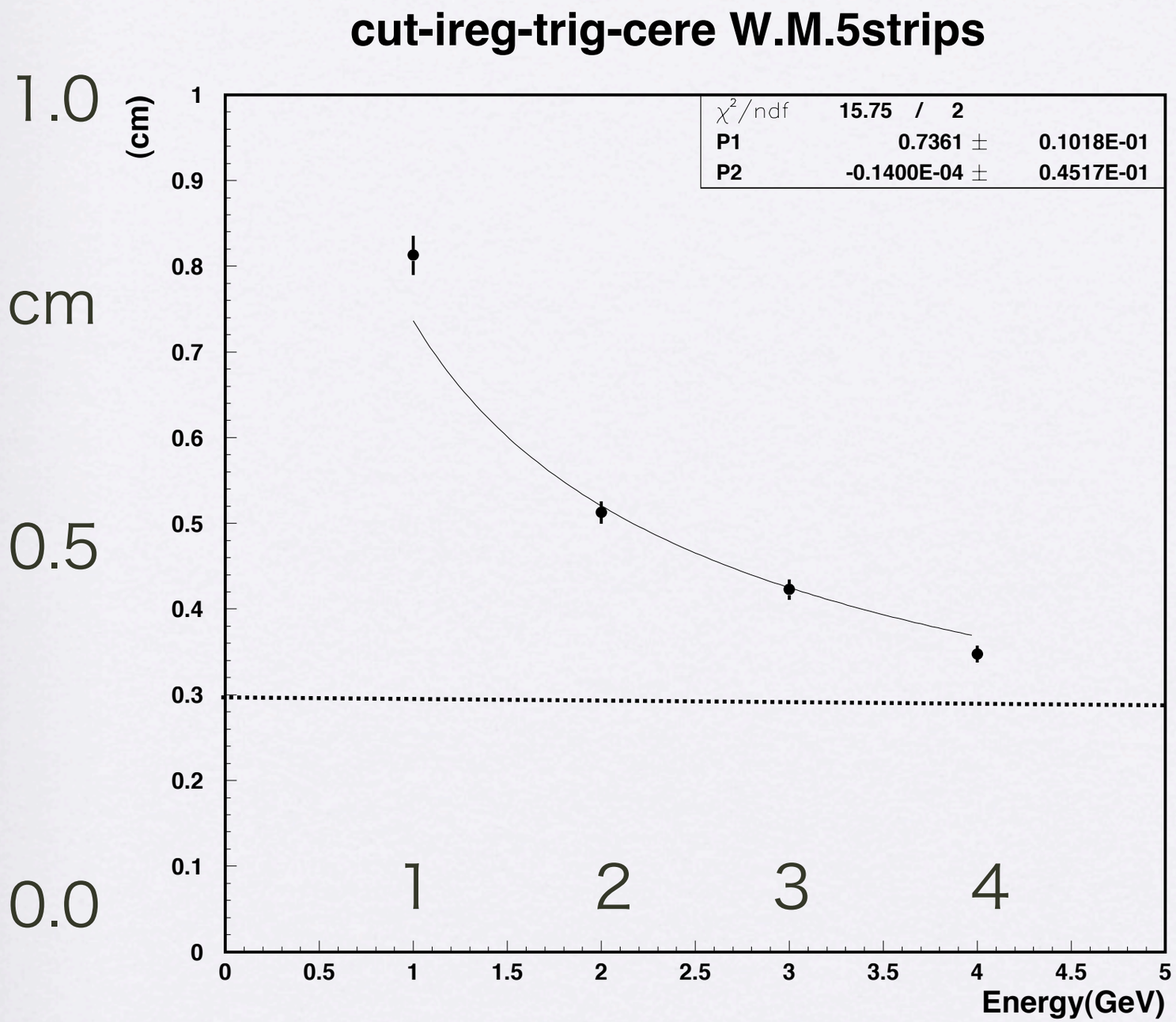

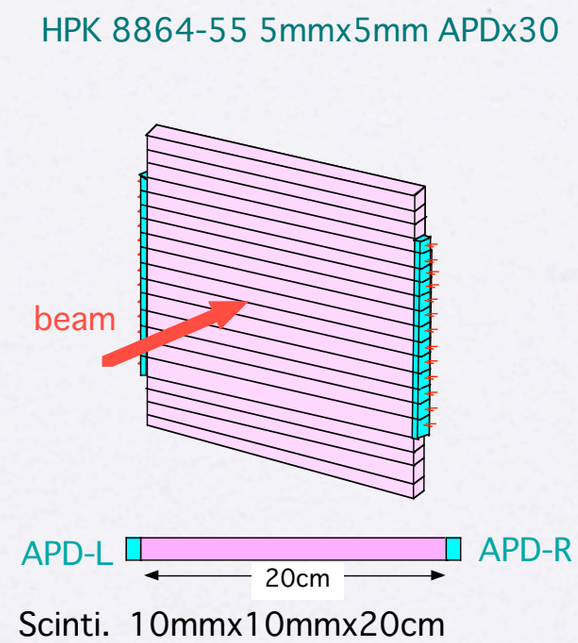

thickness:1cm

Strip fiber with SiPM R/O

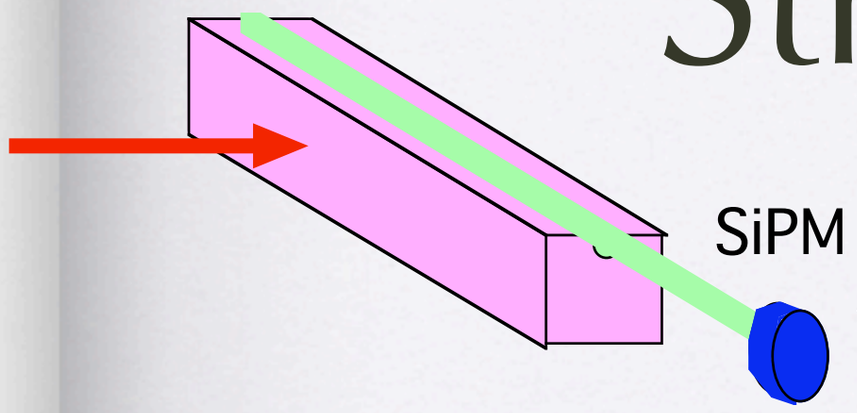

512pixel

61V

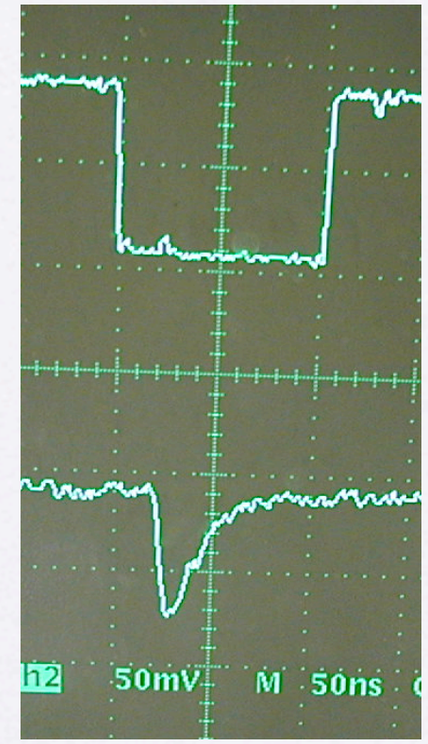

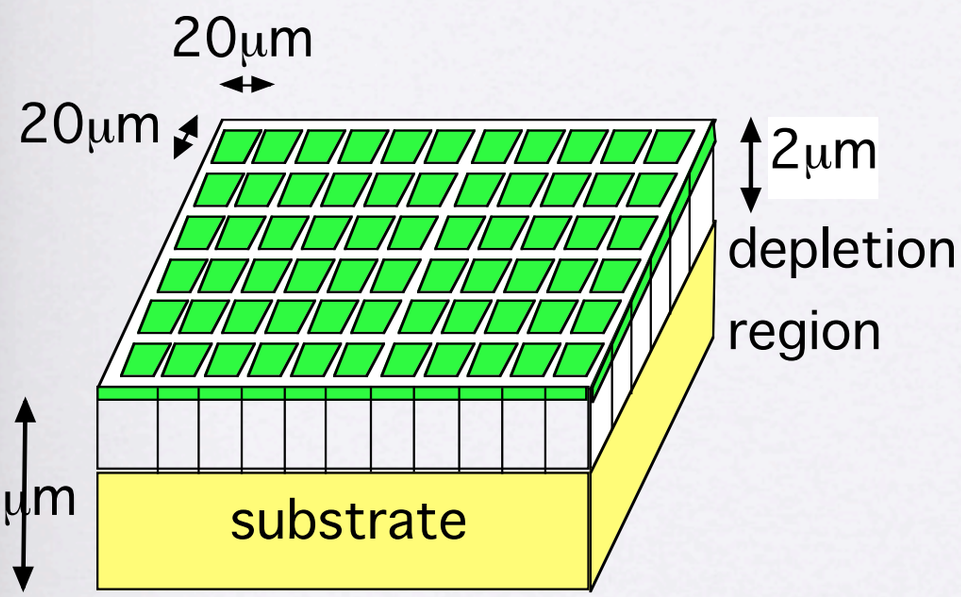

pions

electrons

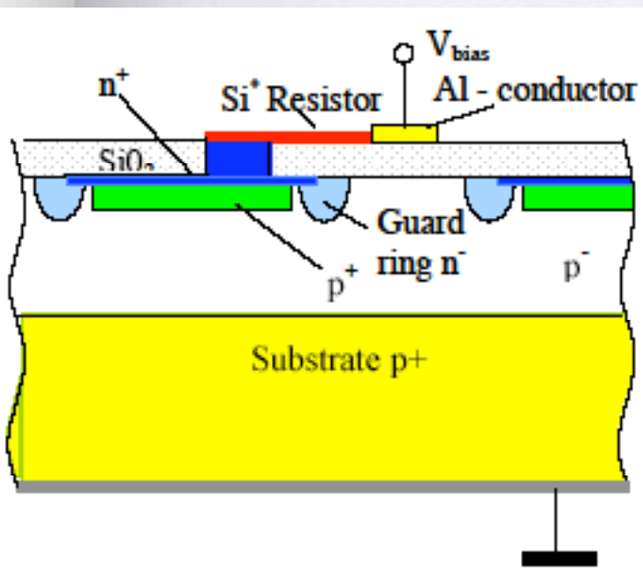

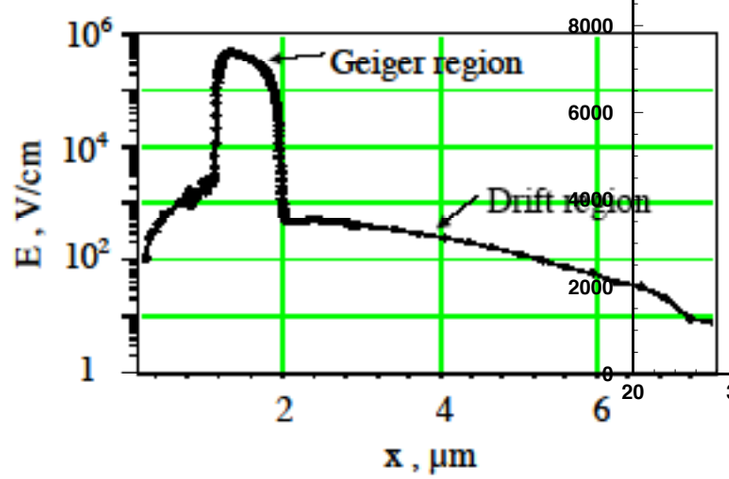

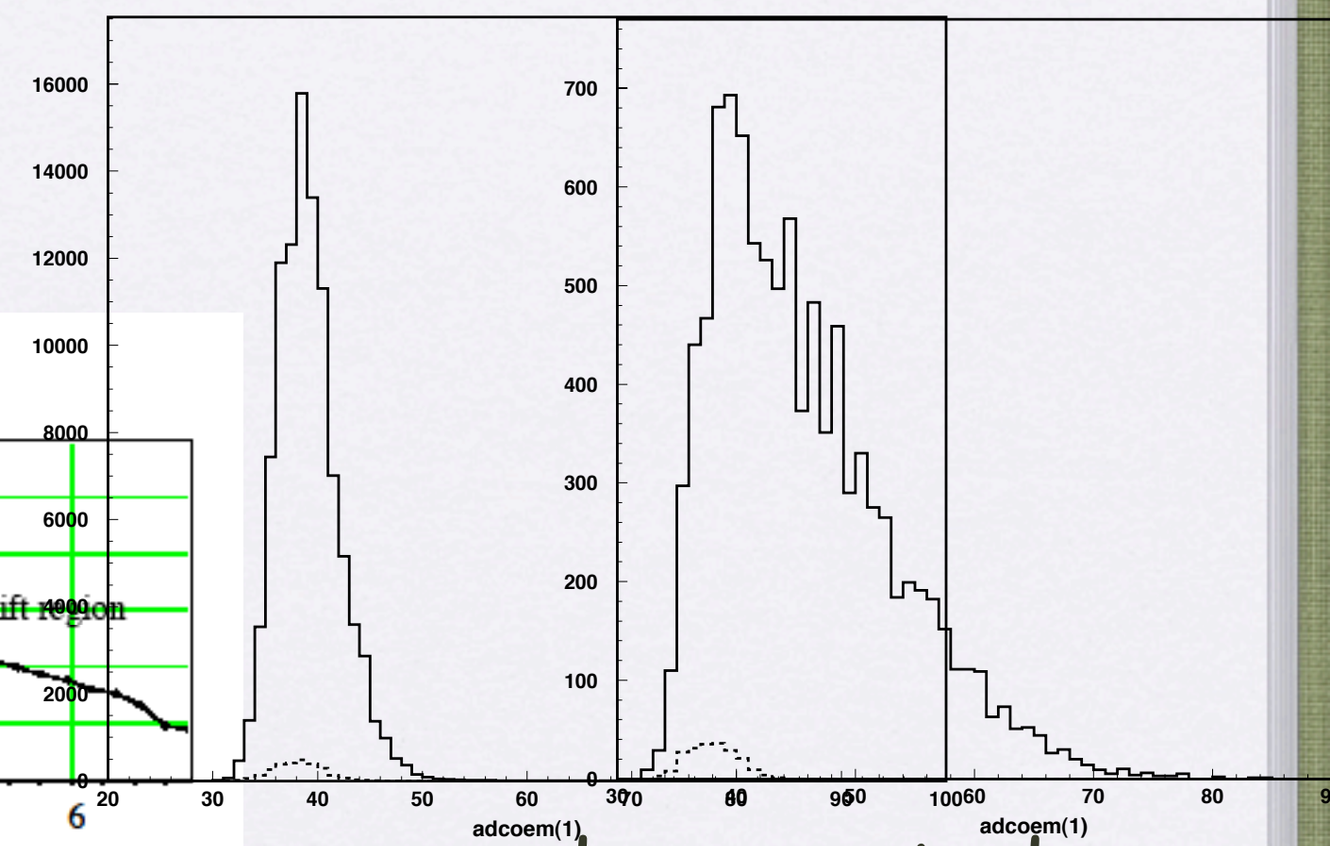

need more study

Strip fiber with HAPD R/O

possible photon counting

good linearity

small crosstalk

gain~5×10^4

need HV ~8KV

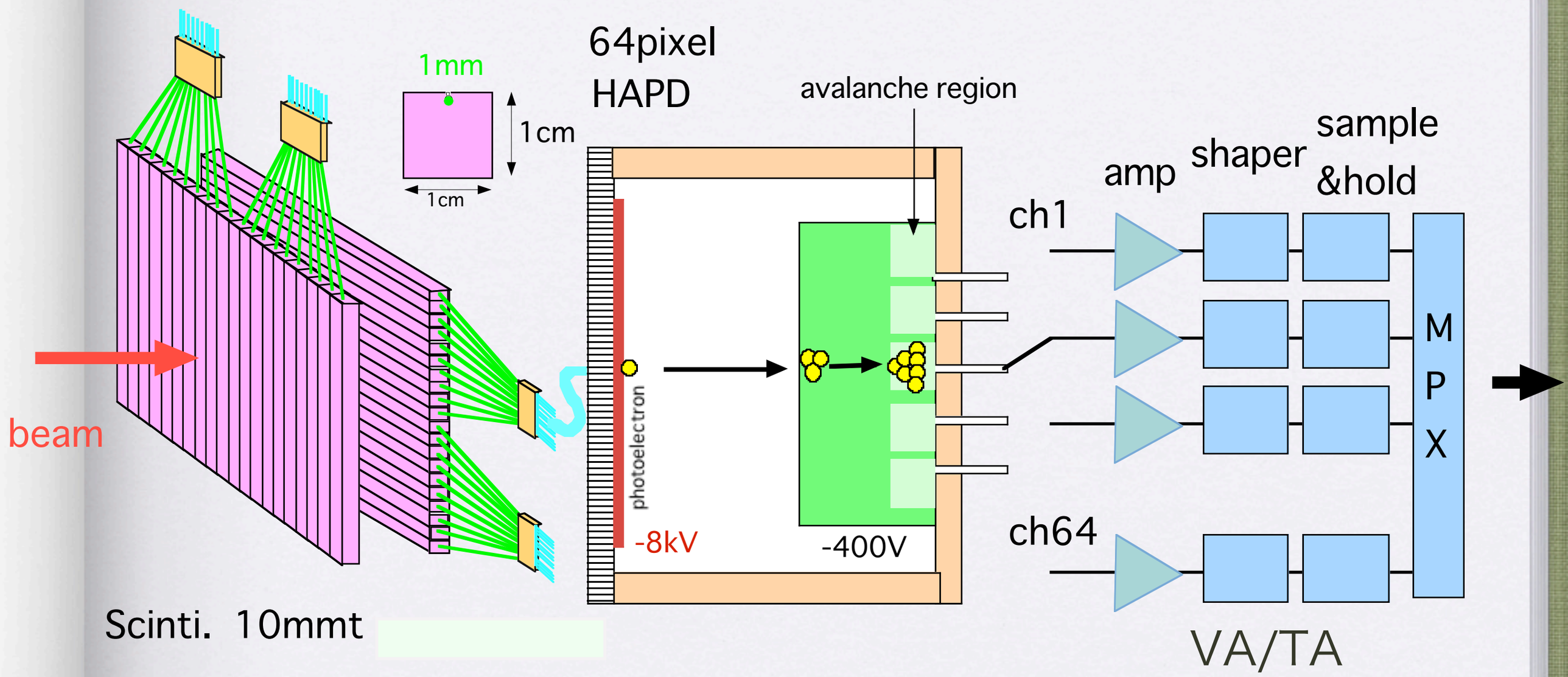

HAPD single photo-electron capability

with LED

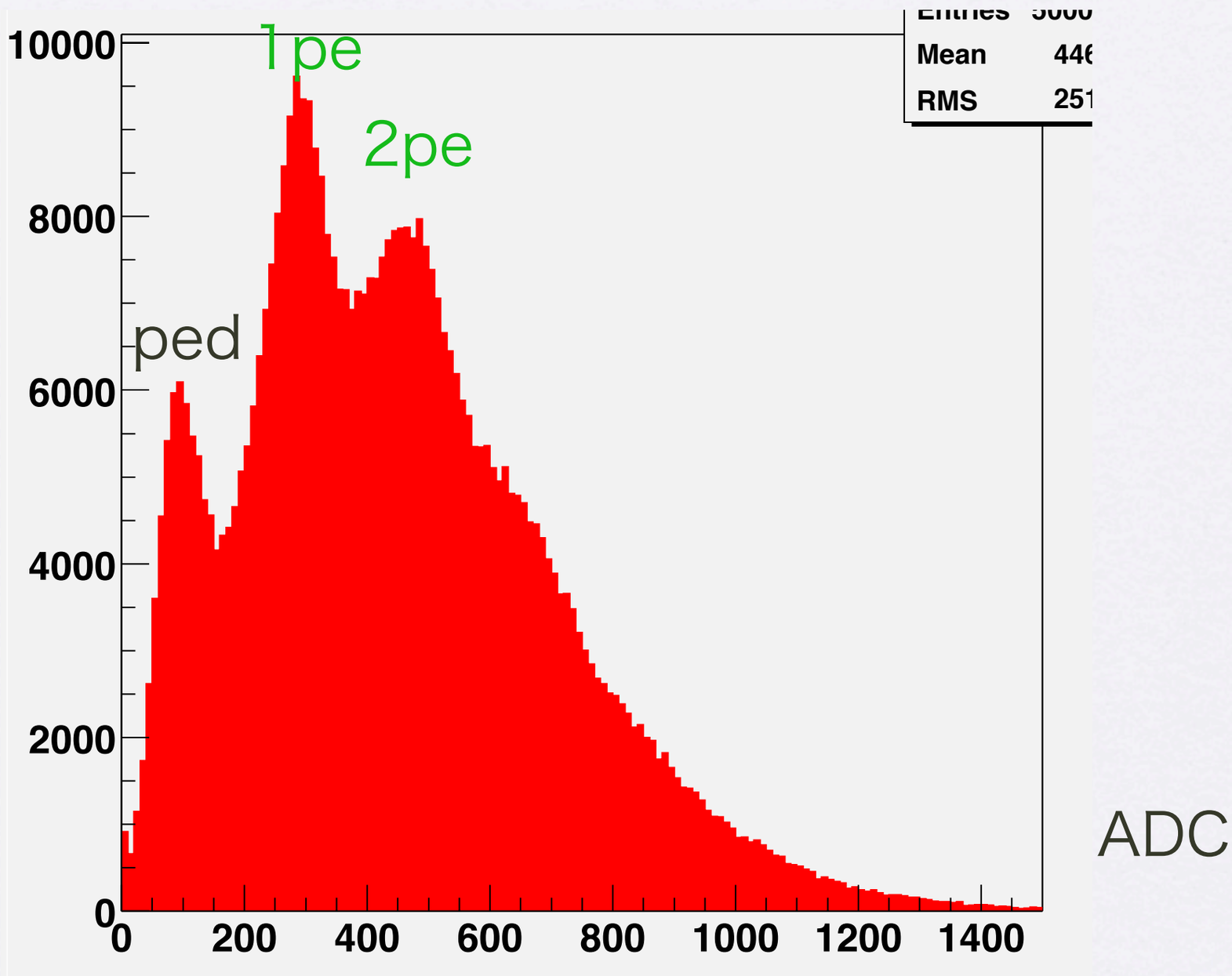

Strip fiber with HAPD R/O

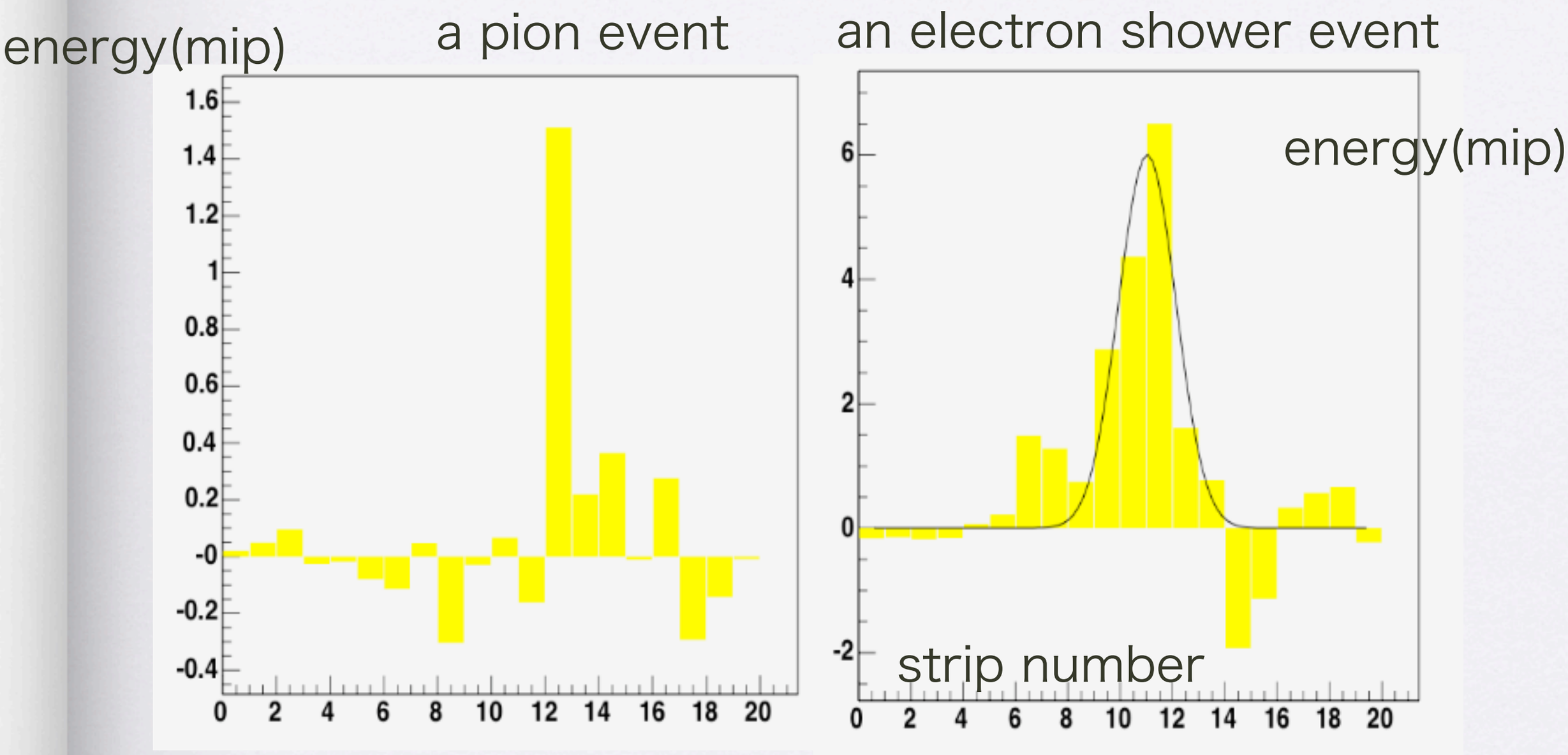

need VA/TA and cabling optimization

Strip fiber with HAPD R/O

pions

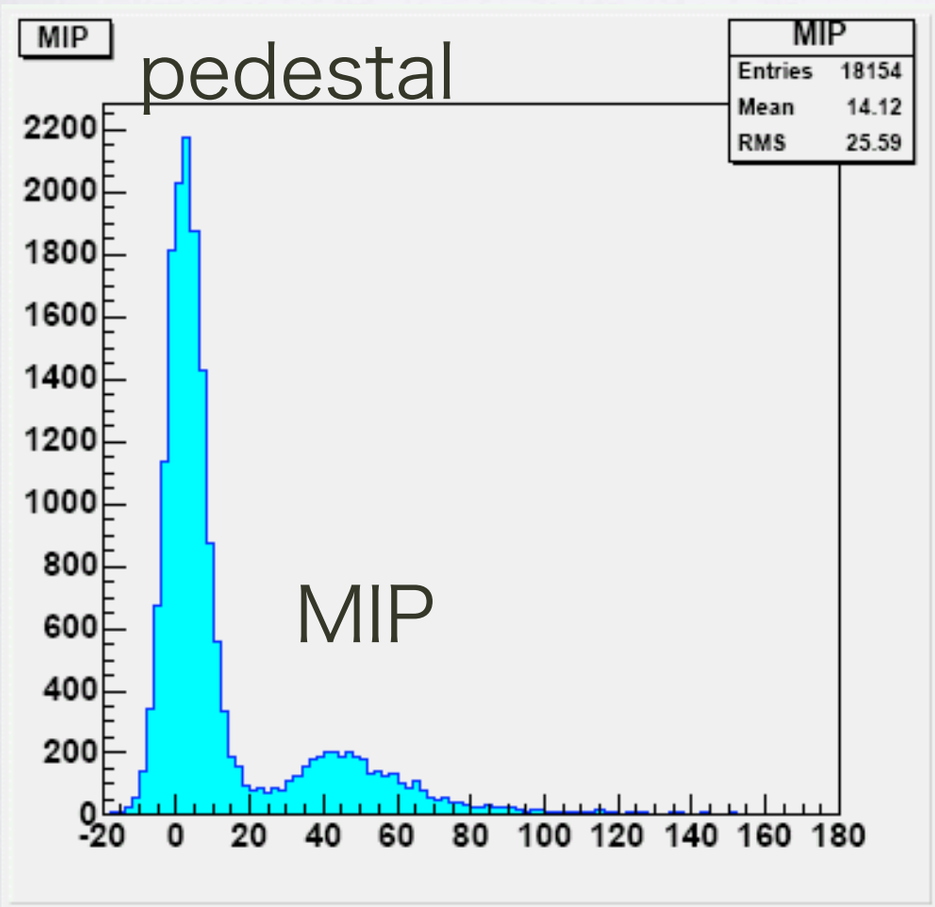

electrons

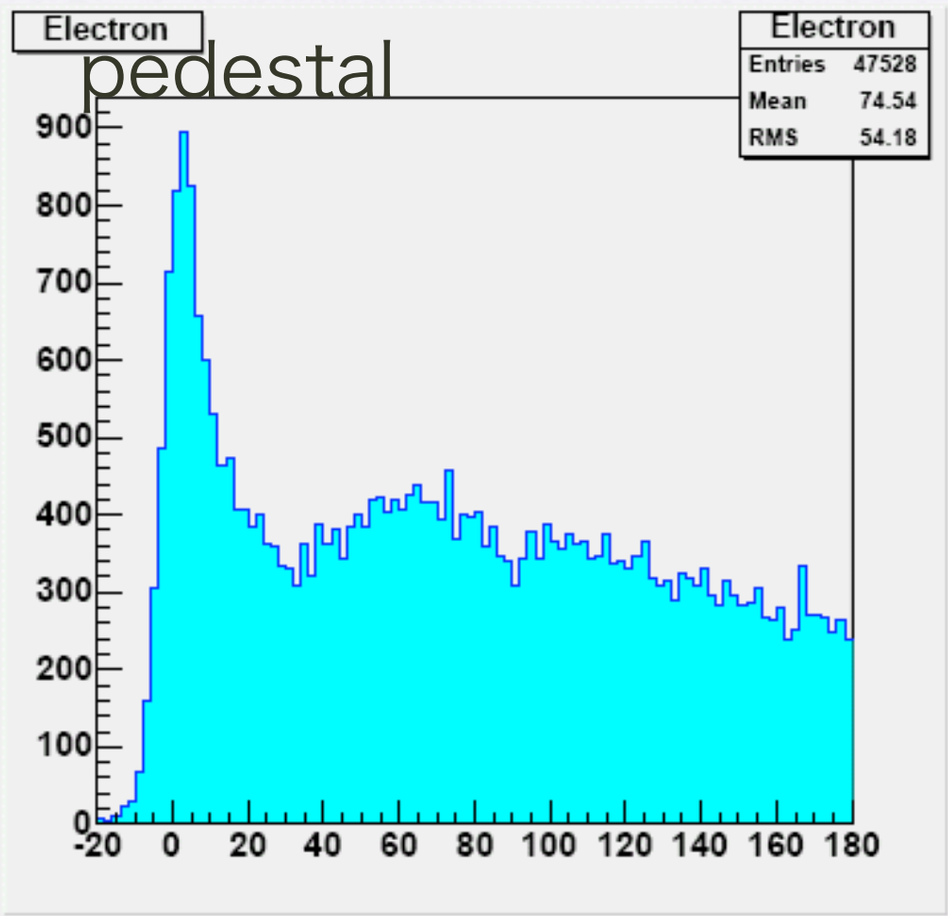

position resolution soon

Strip fiber with EBCCD

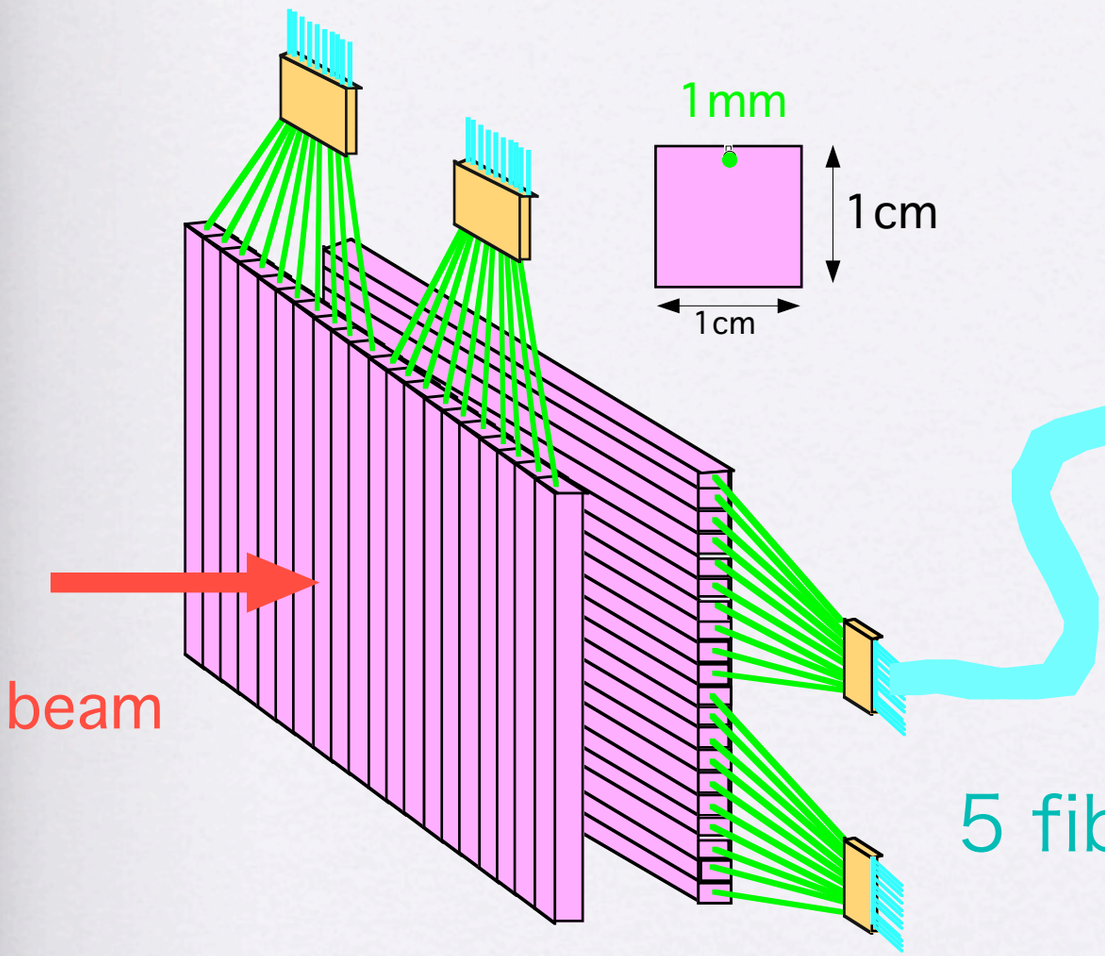

Ultra muti-ch. 512x512 pixels

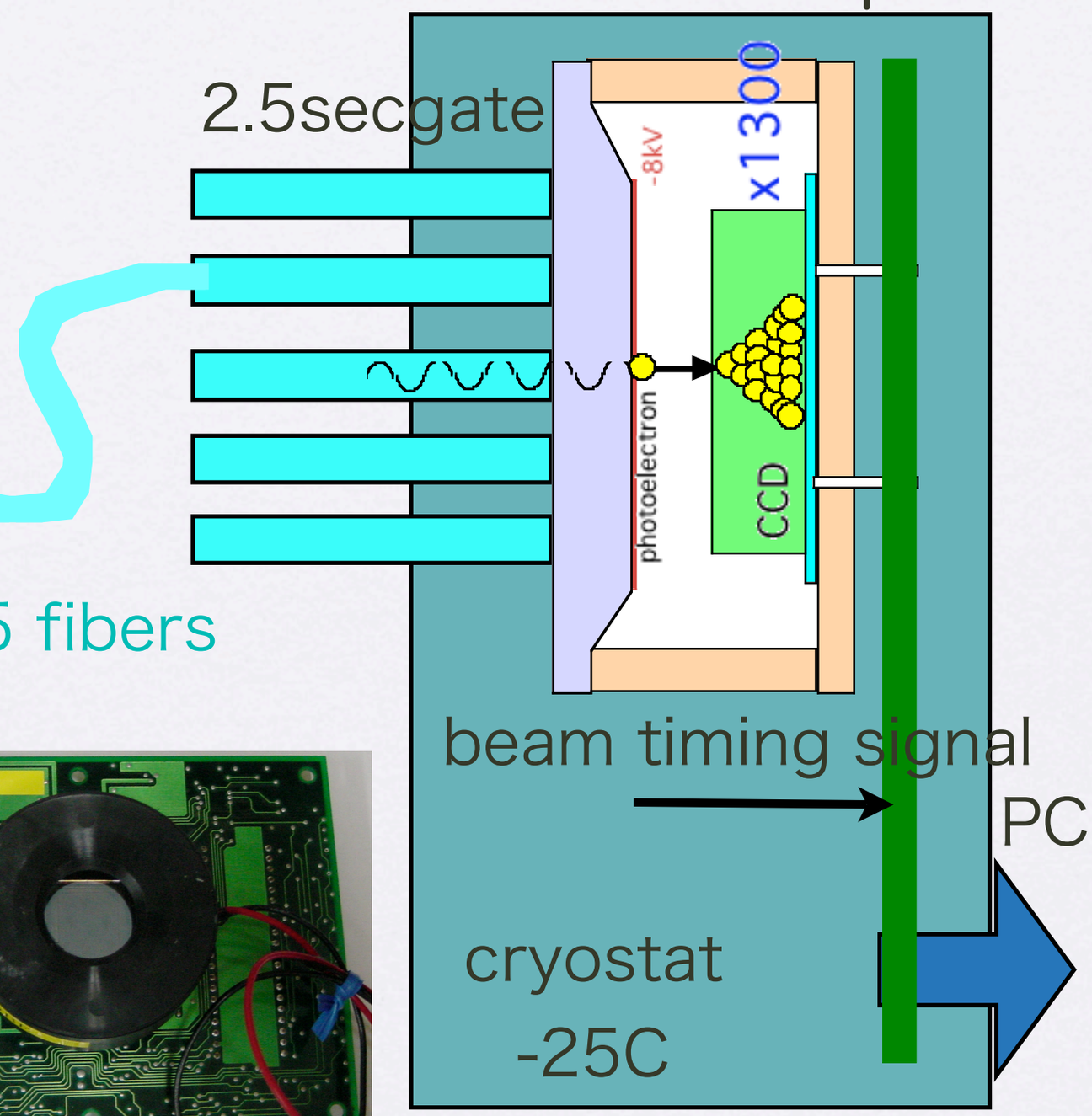

Scinti. 10mmt

photon counting

need cooling

slow R/O

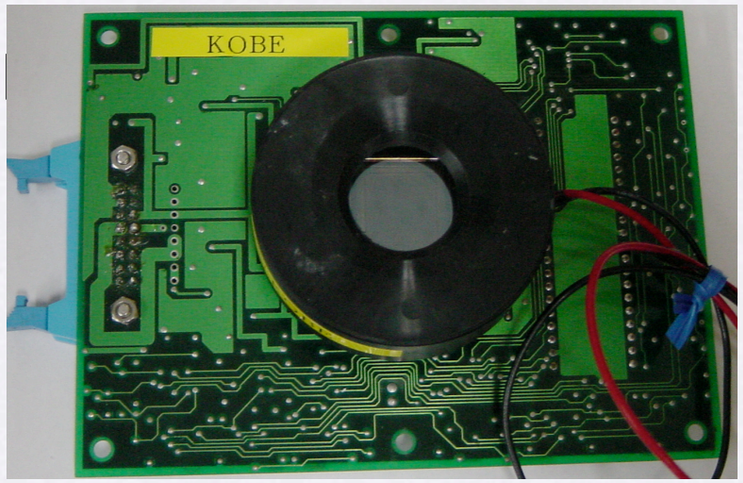

Strip fiber with EBCCD

too much
spread out

need
FOP window
and
less noise

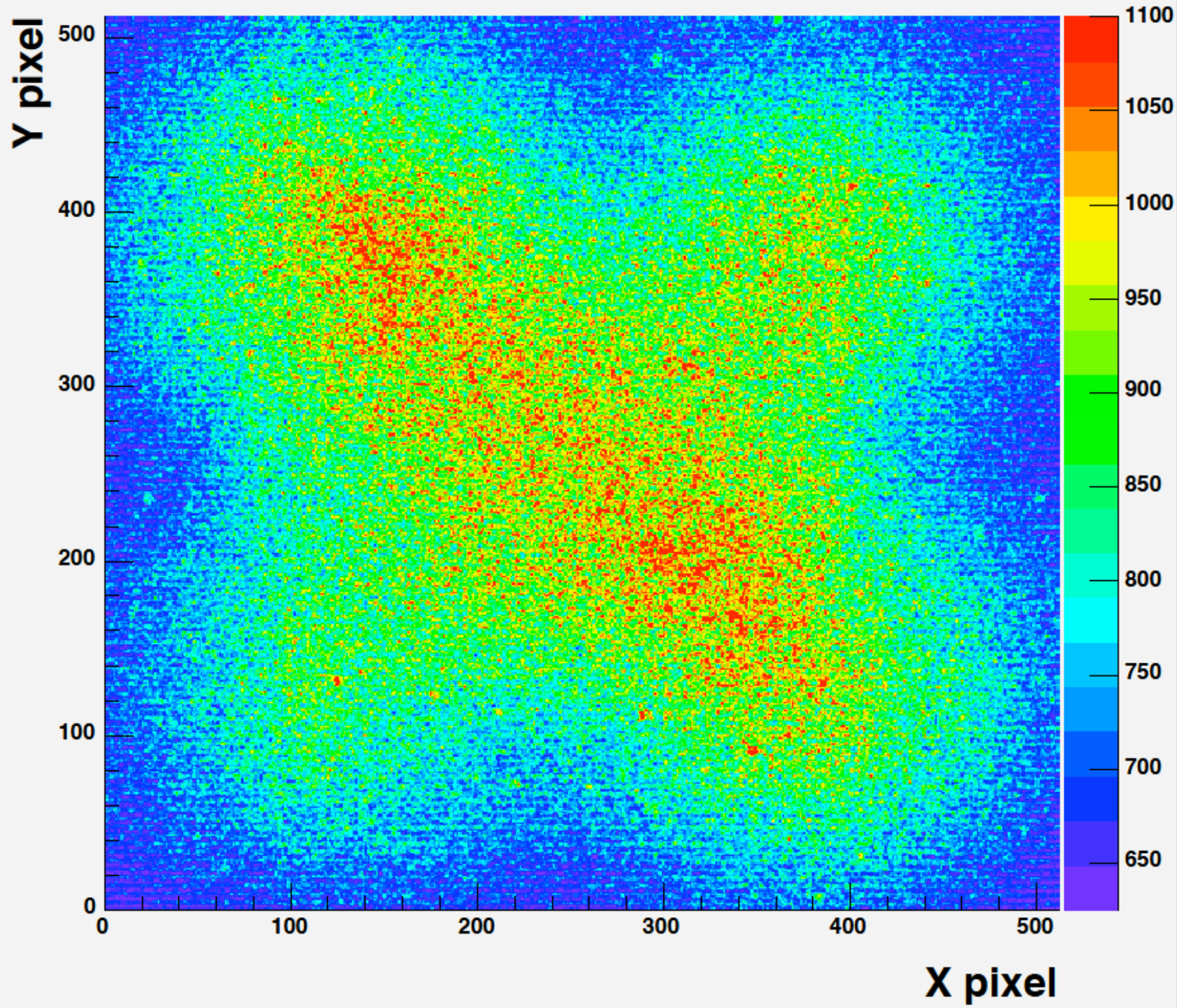

Strip fiber with EBCCD-camera

at room temp.

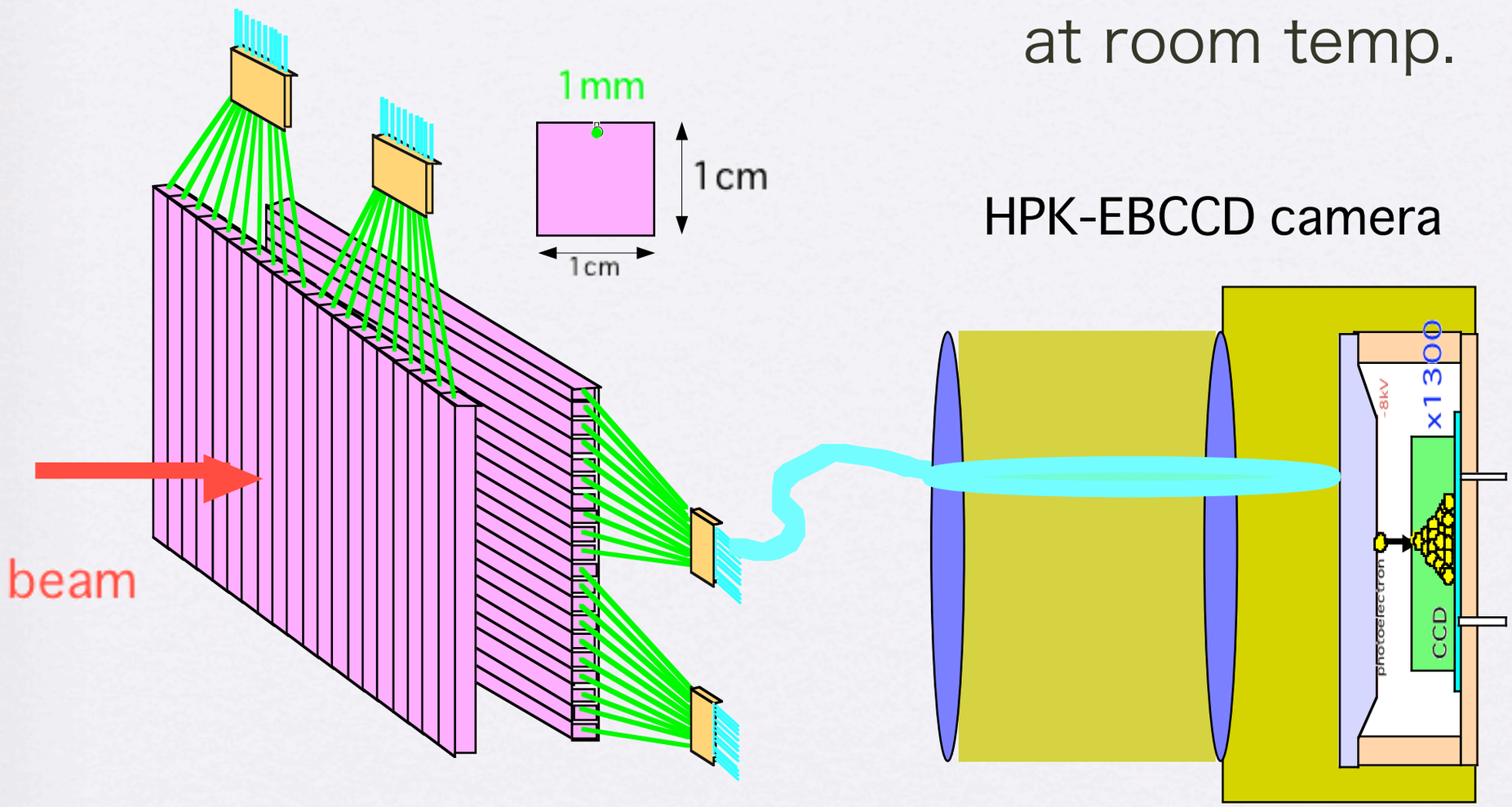

open shutter 200ms

Strip fiber with EBCCD-camera

200ms exposed 4GeV: electron/pions

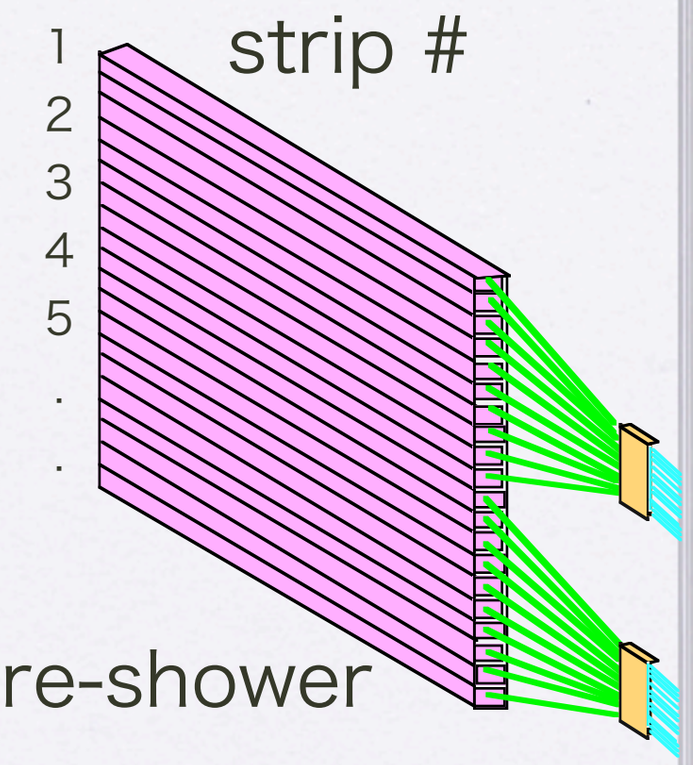

with Pre-shower

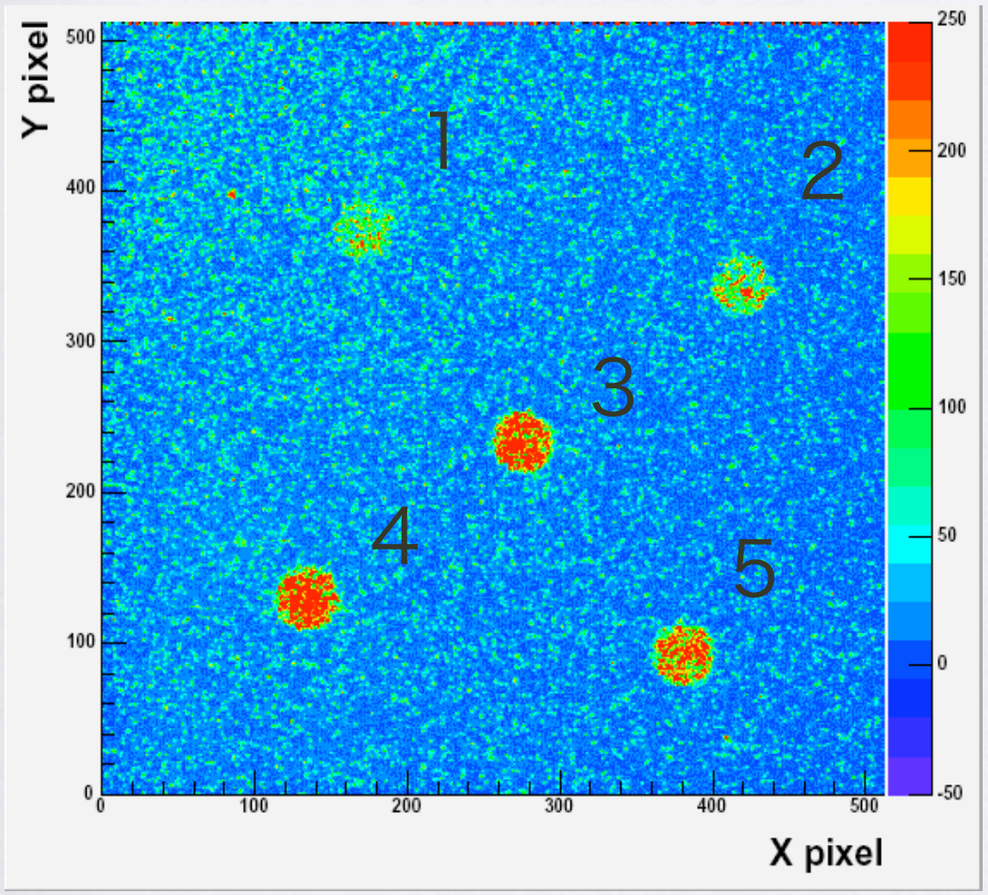

without Pre-shower

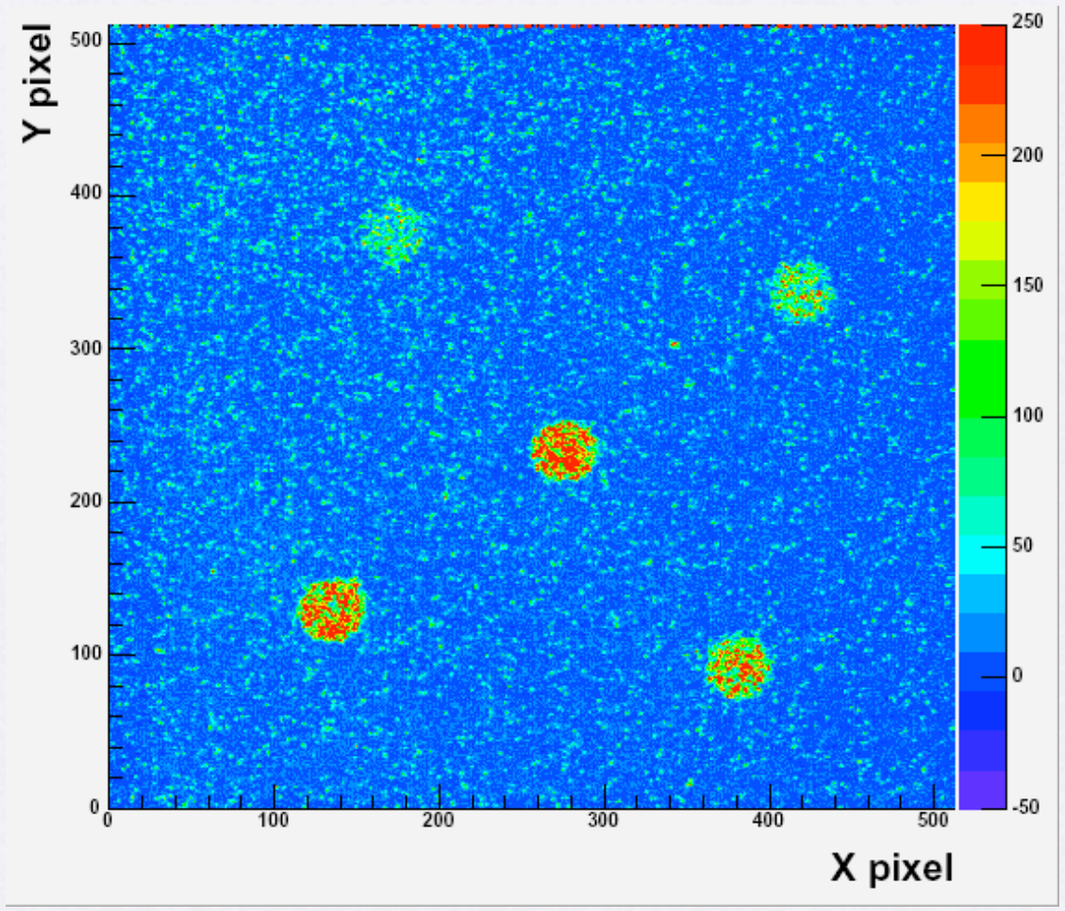

summary

- we have tested the strip shower max. detector with MAPMT, direct attached APD, SiPM, HAPD and EBCCD.
- position resolutions quoted are very similar ~2-3mm at 4GeV for MAPMT and APD R/O.
- need more efforts on , HAPD, SiPM and EBCCD R/O.