Status of TACTIC: A detector for nuclear astrophysics

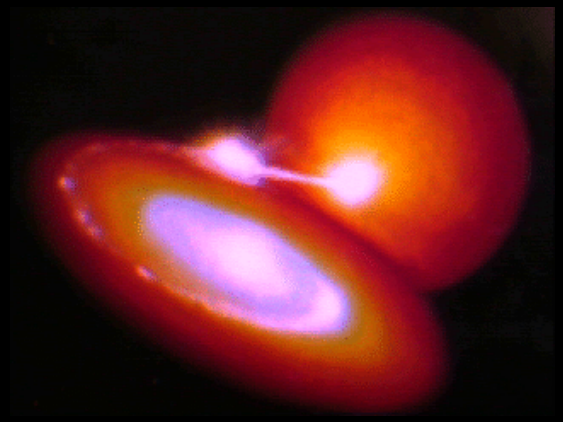

Alison Laird

University of York

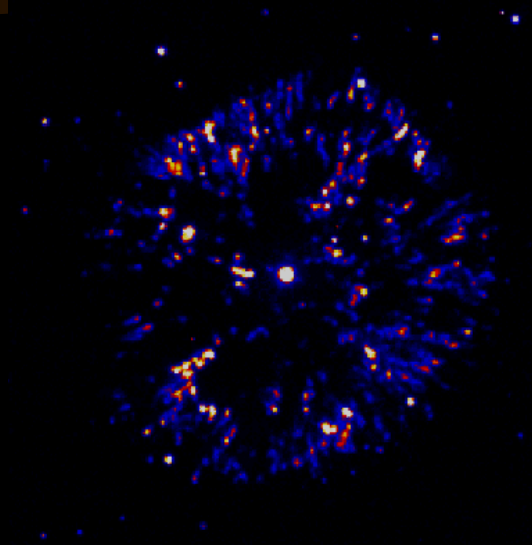

Experimental Nuclear Astrophysics at low energies

- Studying key nuclear reactions for understanding evolution of universe
  - Nucleosynthesis
  - Energy generation

- Experimental conditions
  - Beam energies: about 0.15 – 2 MeV/u (up to few 10^9 K)
  - Charged particle energies of few MeV down to ~ 100 keV
  - Stable beams – high rate
  - Radioactive beams – high background
  - Cross sections can be low - < mbarn

- Need high efficiency, large solid angle detector arrays

TRIUMF Annular Chamber for Tracking and Identification of Charged particles

MOTIVATION: study the $^{8}Li(\alpha,n)^{11}B$ reaction

Recent *(rapid neutron capture)* r-process network calculations of core collapse supernovae have included light nuclei and shown that for particular models, two nuclear reaction chains

$$\alpha(\alpha n,\gamma)^{9}Be(n,\gamma)^{10}Be(\alpha,\gamma)^{14}C \quad \text{and}$$
$$\alpha(t,\gamma)^{7}Li(n,\gamma)\mathbf{^{8}Li(\alpha,n)^{11}B}$$

can significantly affect the final abundances of certain heavy nuclei

Much experimental effort has gone into studying this reaction…….

Last $^{8}Li(\alpha,n)^{11}B$ measurement by means of a Multiple Sampling and Tracking Proportional Chamber (MSTPC)

T. Hasimoto, Nuc. Phys. A **764** (2004)330

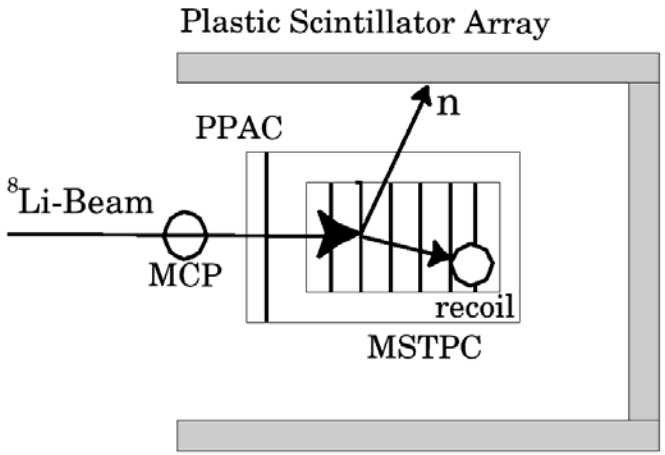

Figure 1. Schematic illustration of the detector system.

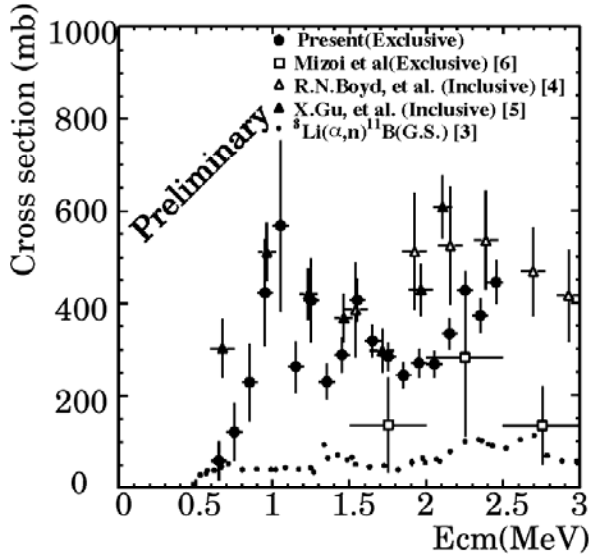

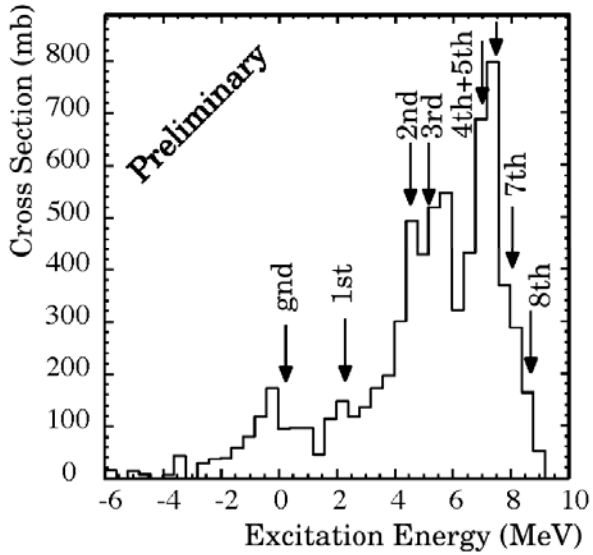

+ Helium as <u>target gas</u> and <u>counter gas</u>
+ Threedimensional tracking plus energy loss
- ^{8}Li beam directly into the chamber
- Beam stopped in chamber
- Low beam intensity
- Broad energy spectrum of the beam

Schematic and simplified view of a tracking chamber for nuclear reactions

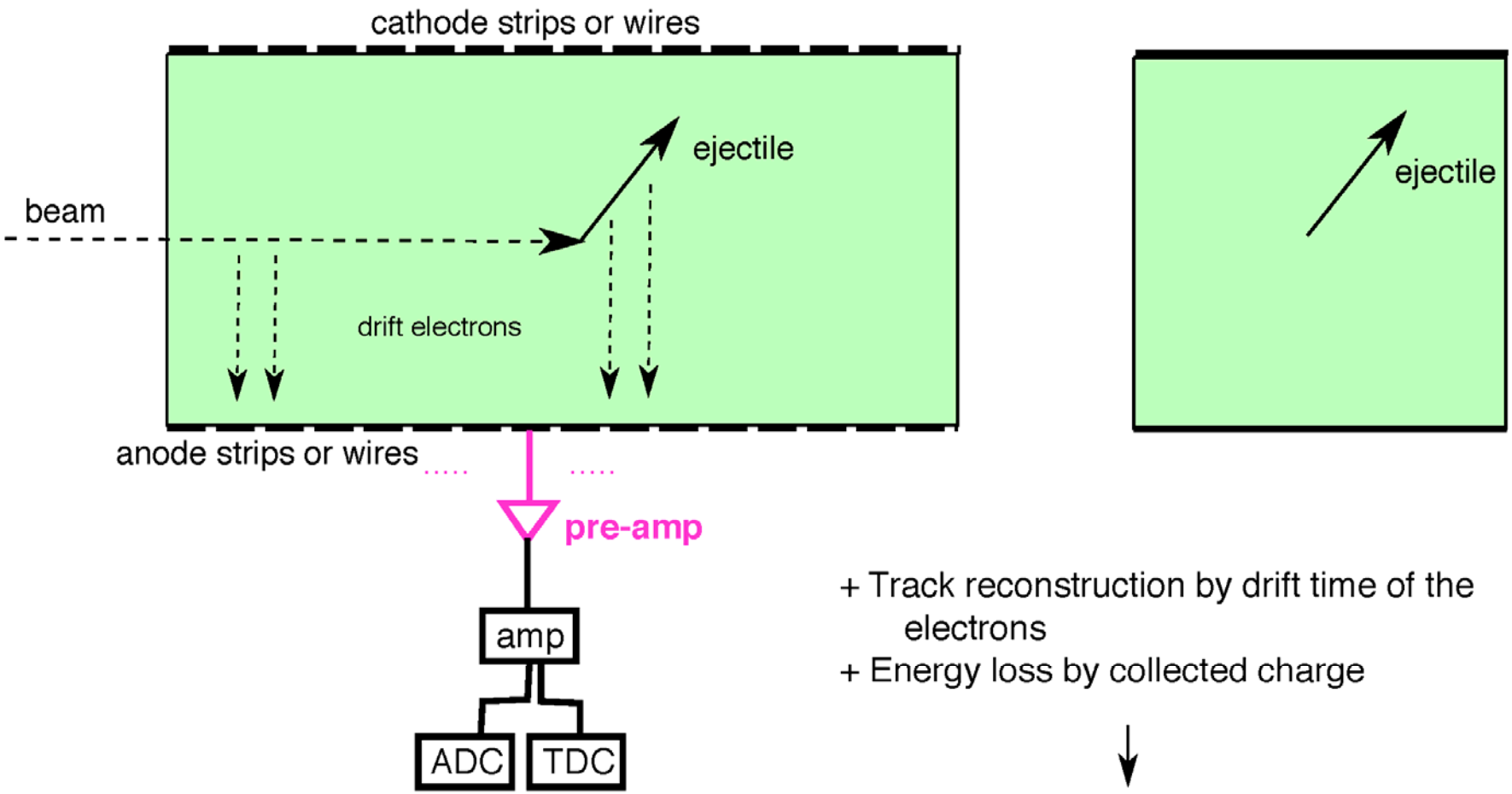

+ Track reconstruction by drift time of the electrons
+ Energy loss by collected charge

↓

Particle identification

Cylindrical chamber

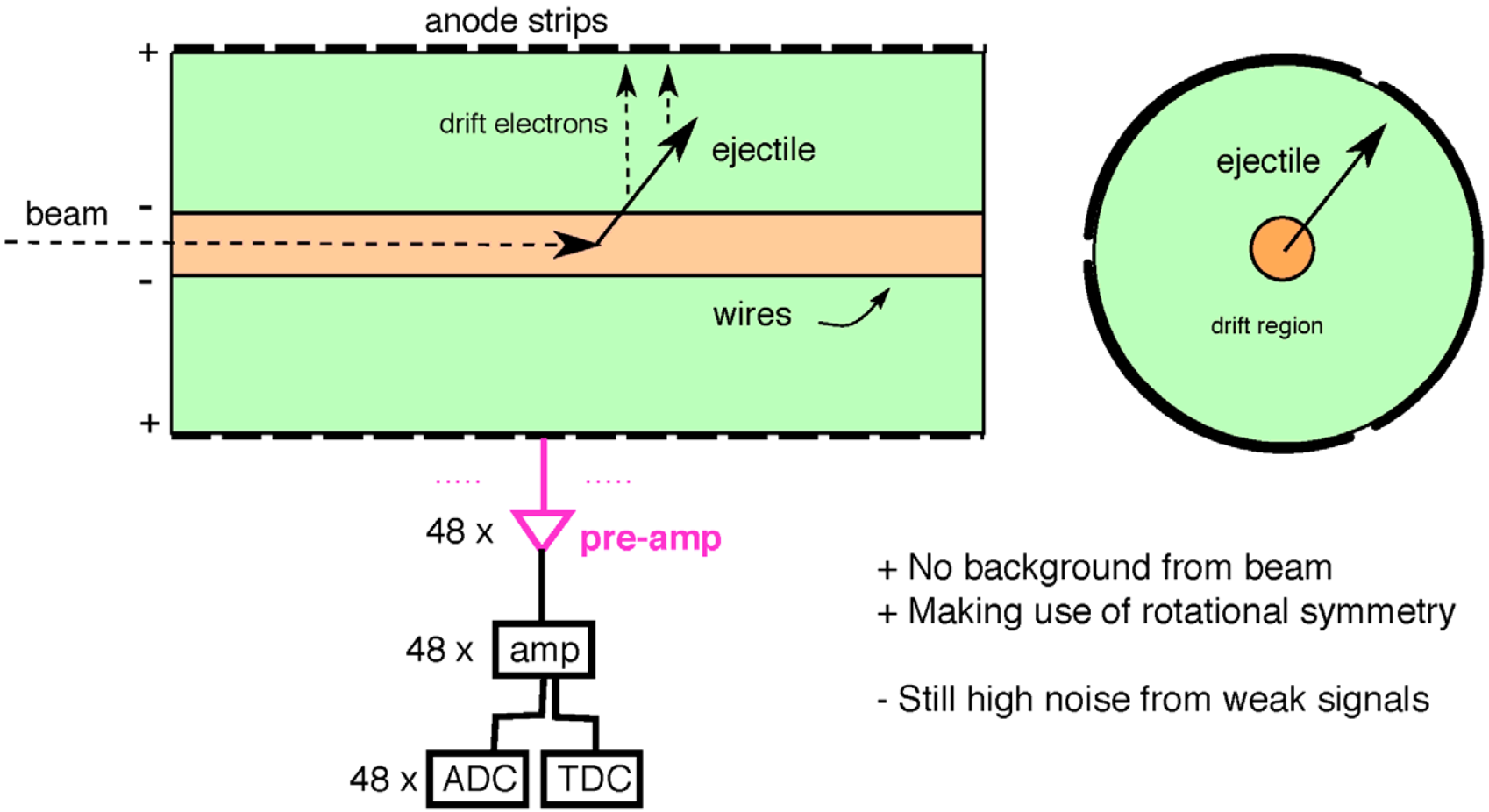

+ No background from beam
+ Making use of rotational symmetry

- Still high noise from weak signals

New Set-up using a Gas Electon Multiplier and Flash ADCs

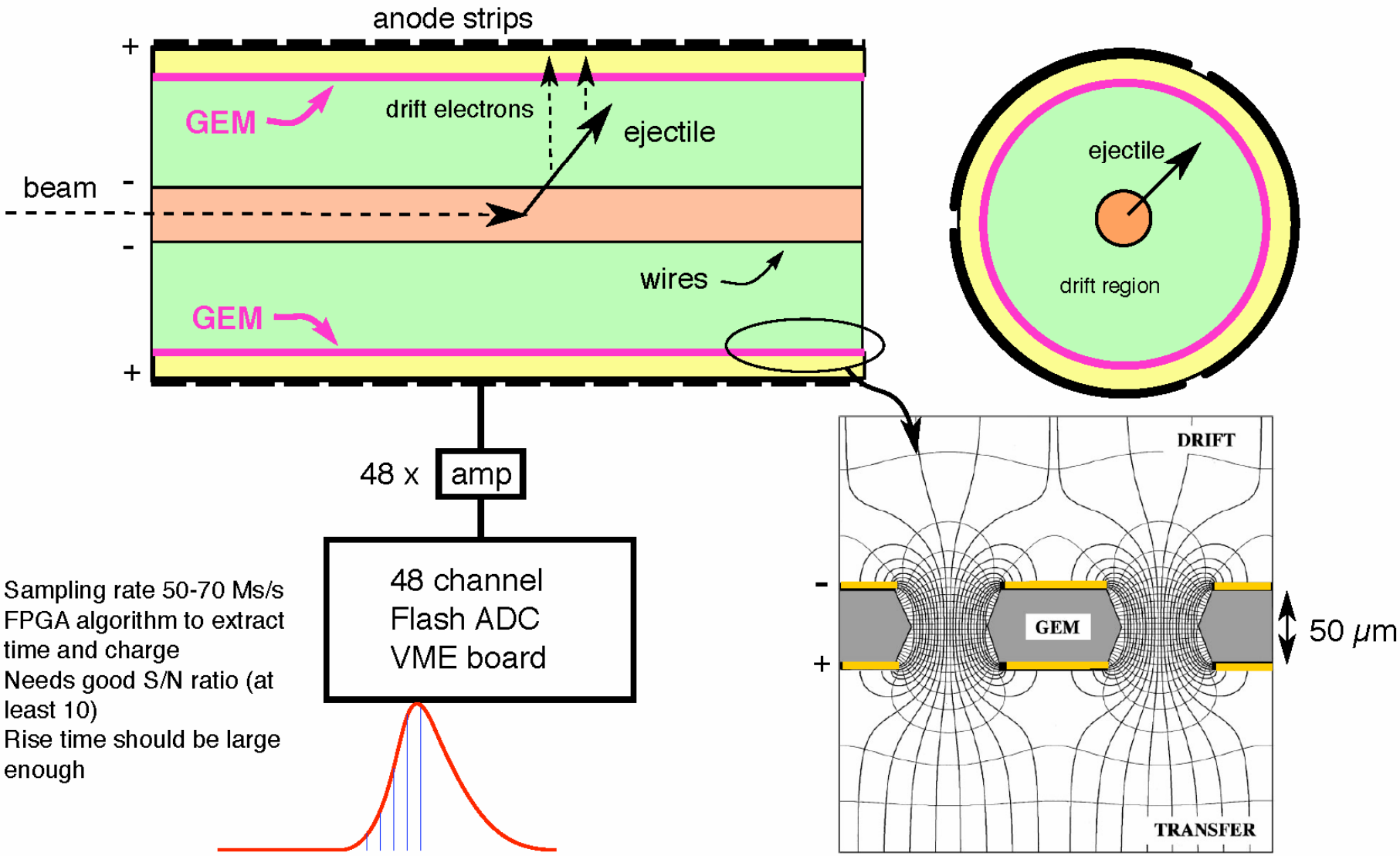

Sampling rate 50-70 Ms/s
FPGA algorithm to extract time and charge
Needs good S/N ratio (at least 10)
Rise time should be large enough

Schematic design of TACTIC detector

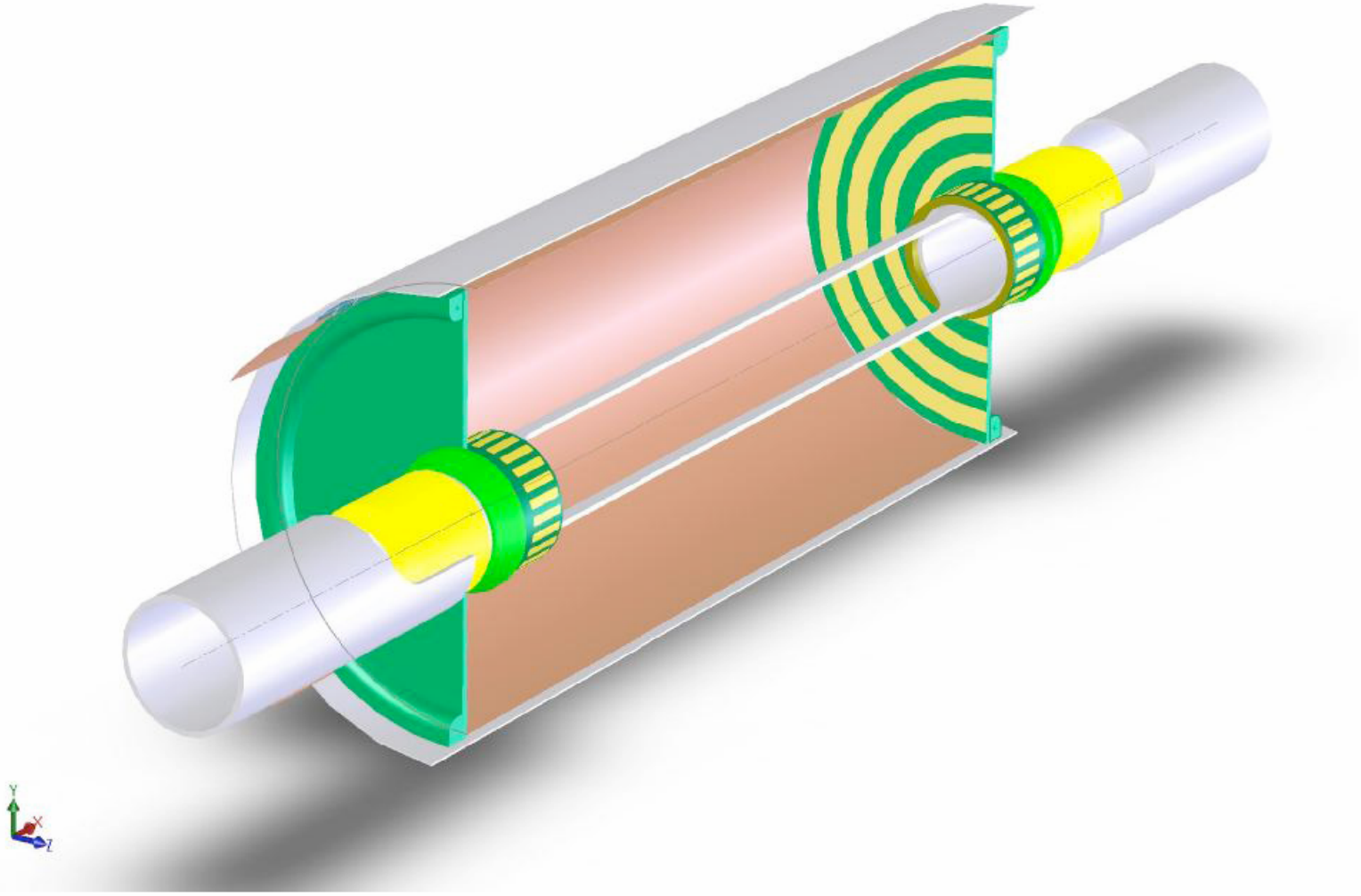

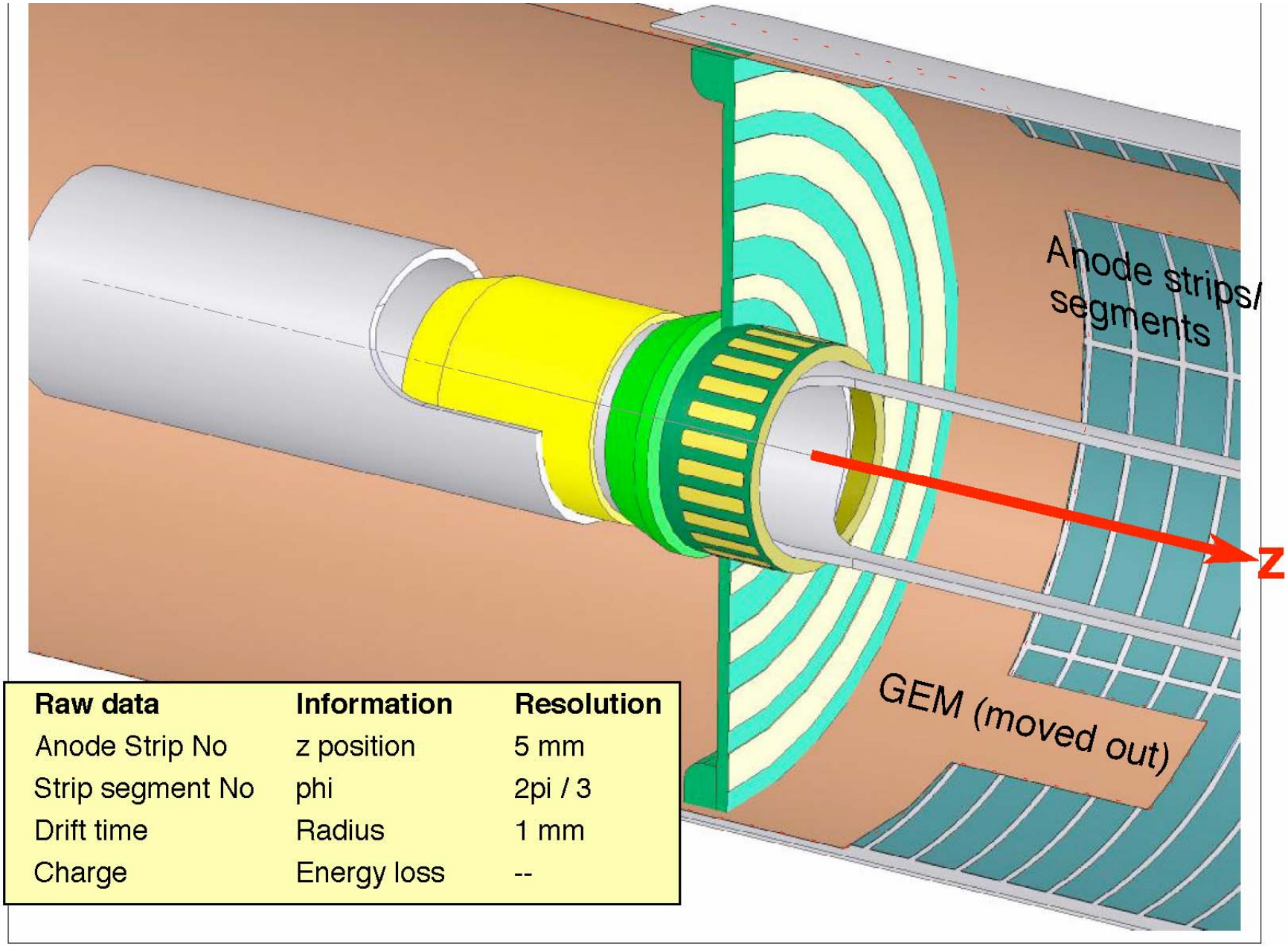

Raw data	Information	Resolution
Anode Strip No	z position	5 mm
Strip segment No	phi	2pi / 3
Drift time	Radius	1 mm
Charge	Energy loss	--

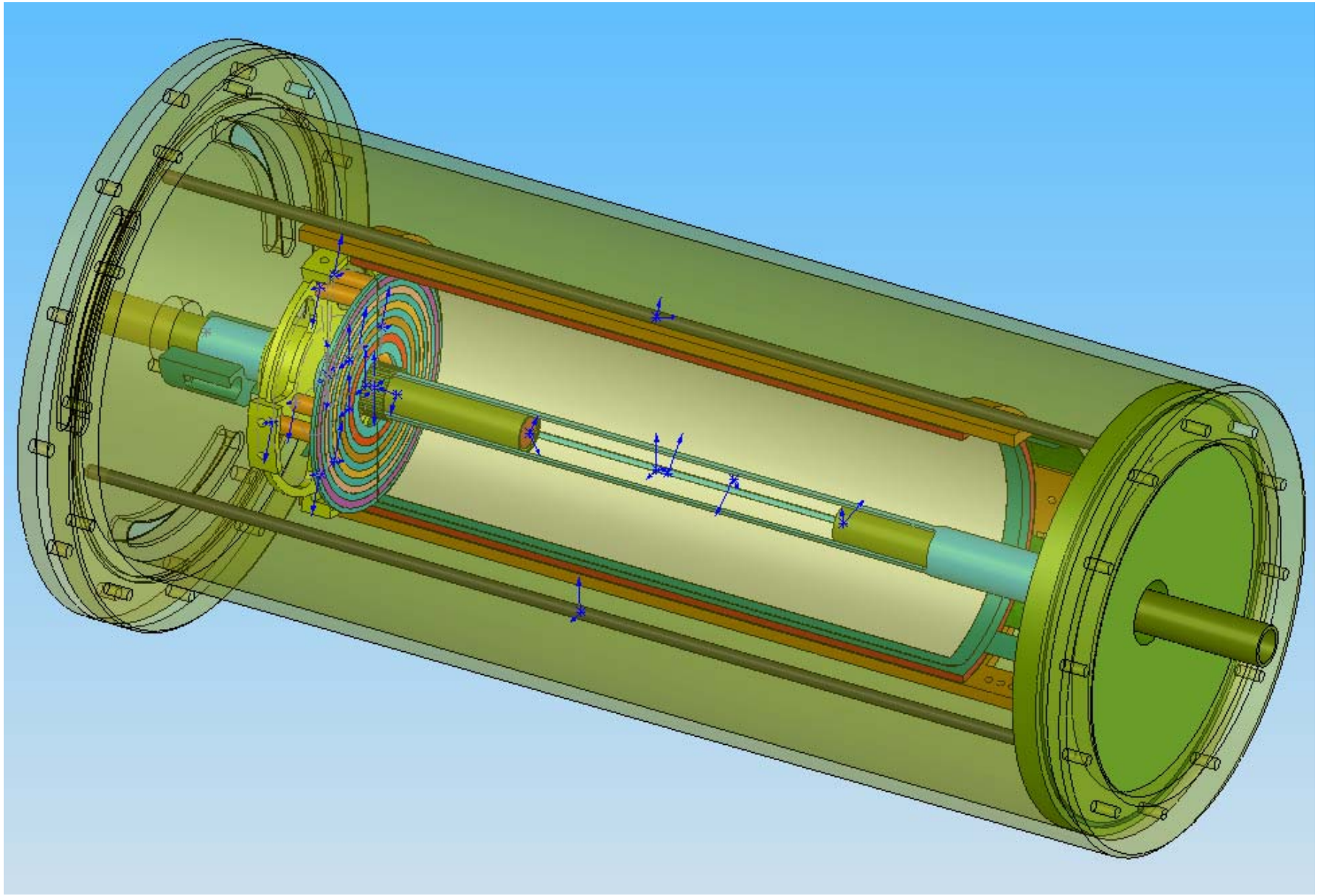

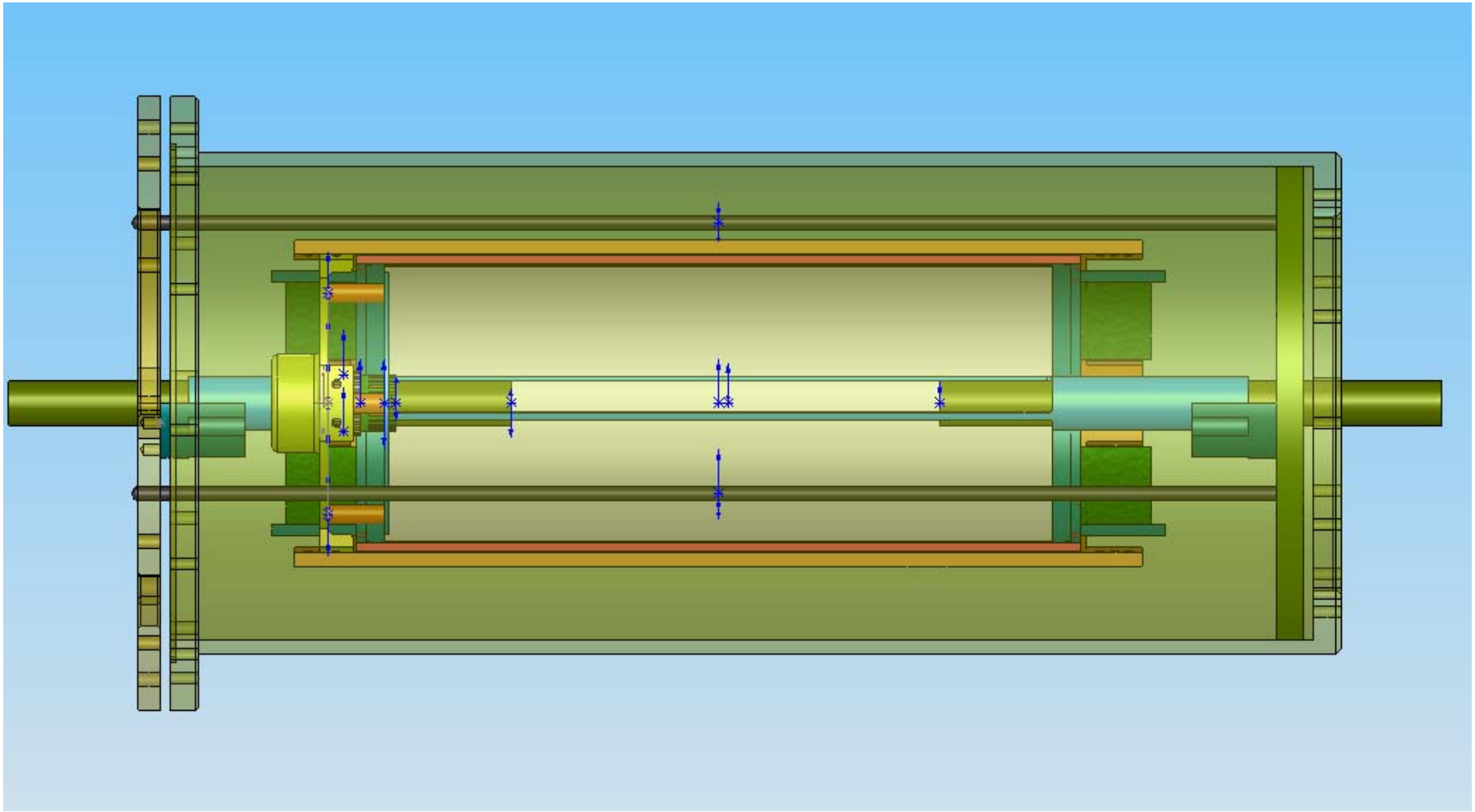

Testchamber

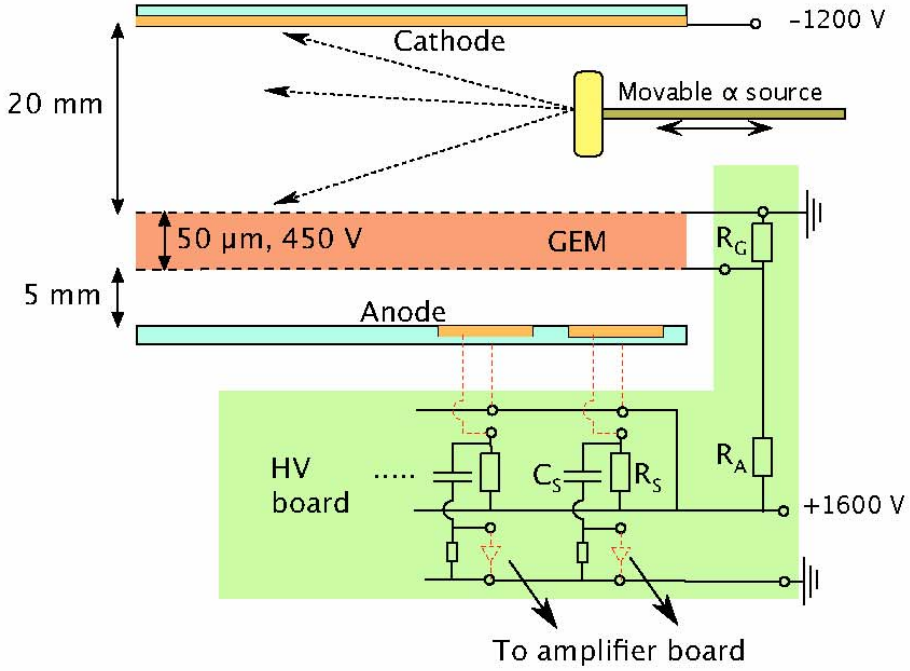

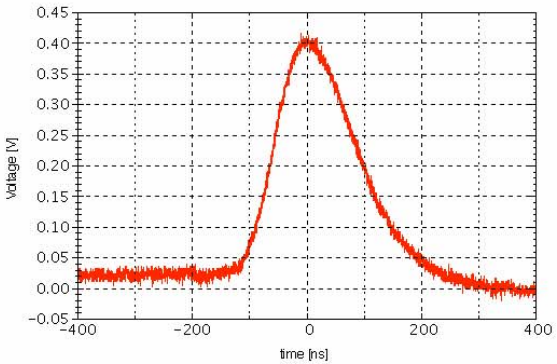

Pulse with 90% Helium, 10% CO2 gas mixture at STP.

Pulse height: 400 mV
Rise time: 100 ns
Noise: 10 mV

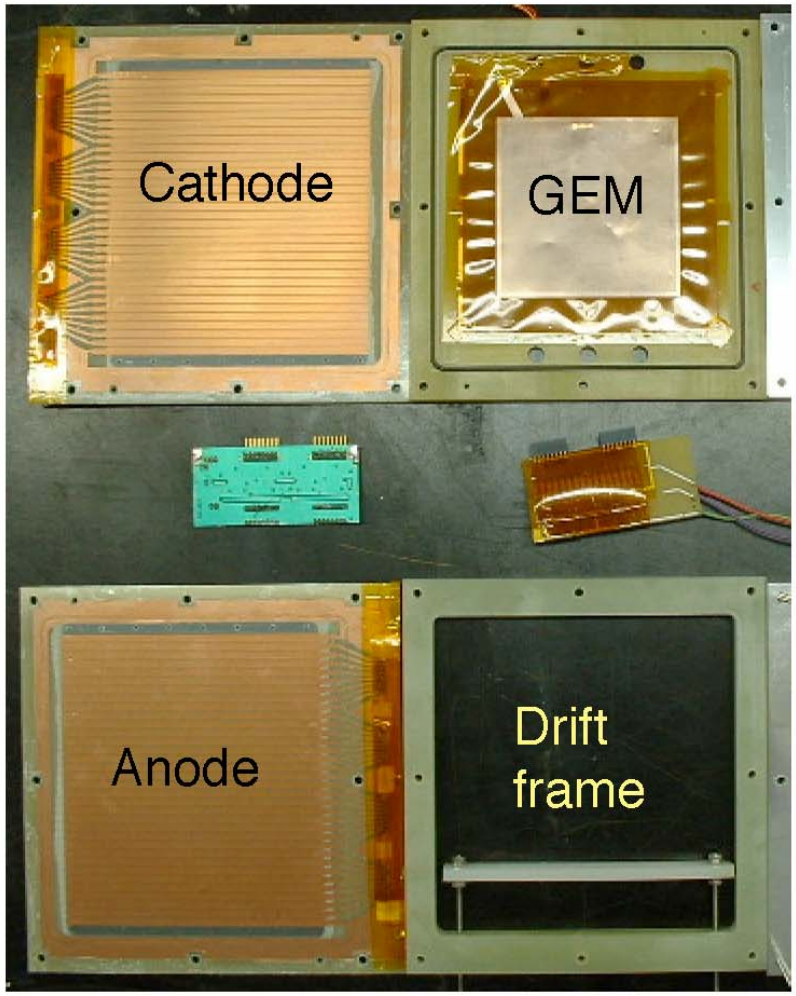

How is the GEM working with Helium?

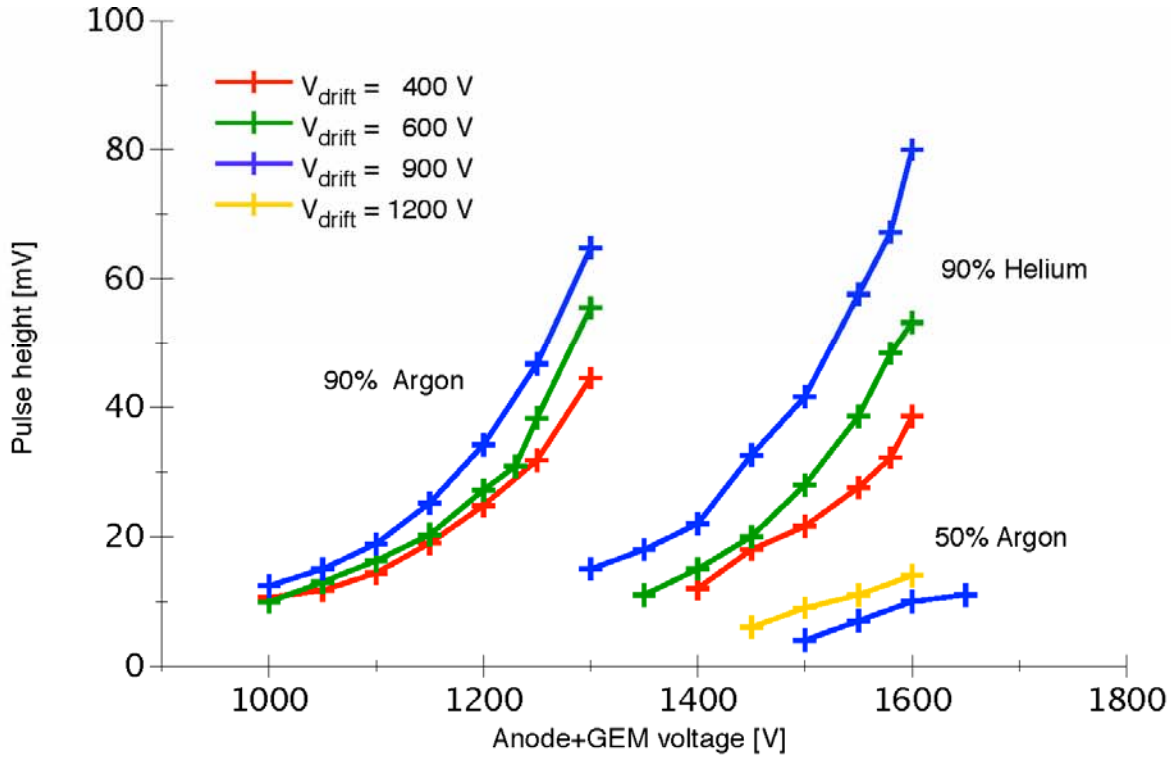

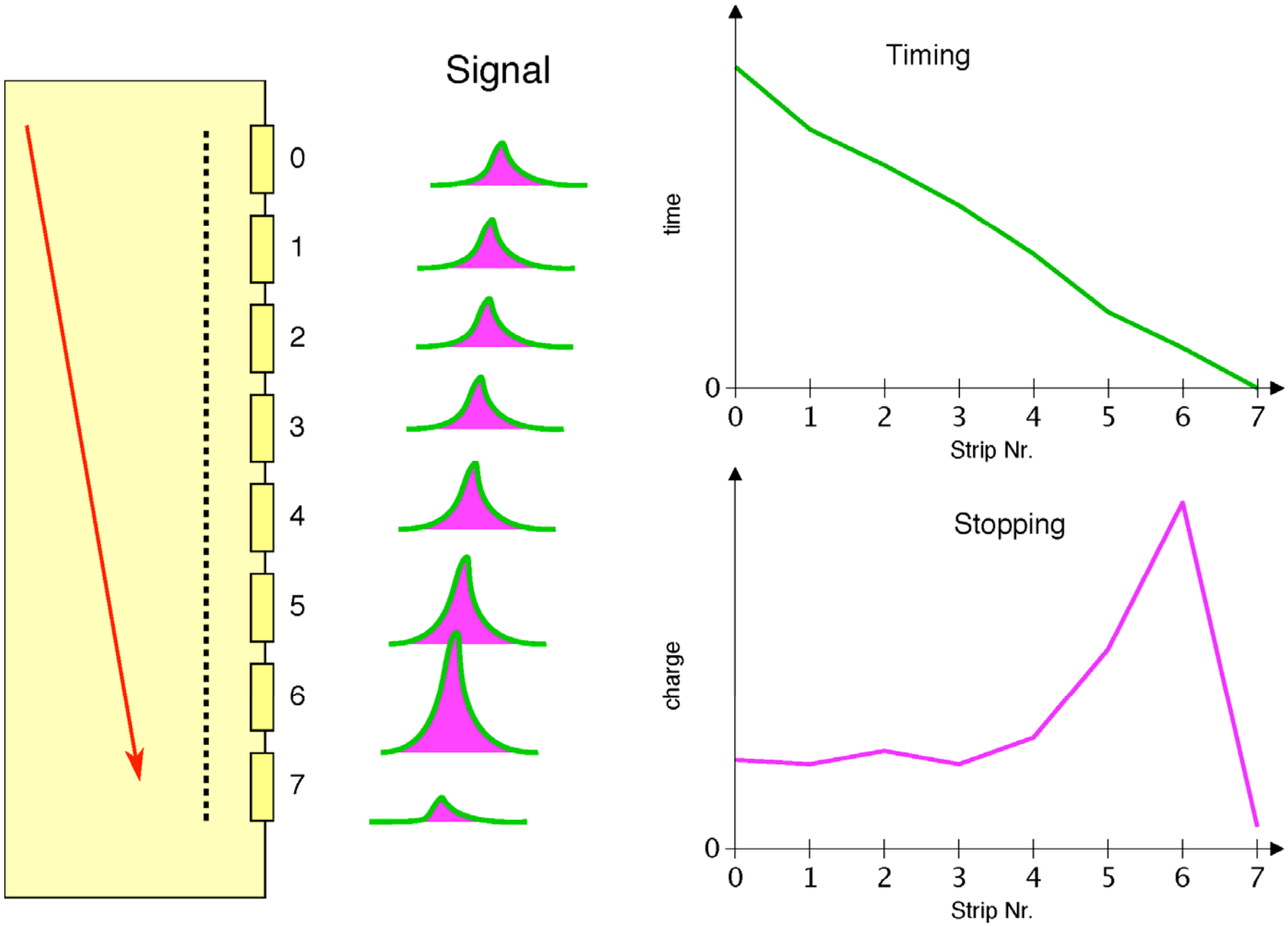
Signal
0
1
2
3
4
5
6
7
Timing
time
0
0
1
2
3
4
5
6
7
Strip Nr.
Stopping
charge
0
0
1
2
3
4
5
6
7
Strip Nr.

GEANT 4 Simulations

- Currently developing GEANT 4 simulations of prototype cylindrical chamber
  - stopping powers of low energy charged particles not well reproduced

^{11}B end points, 9 MeV ^{8}Li beam, 250 mbar 90/10 He/CO_2

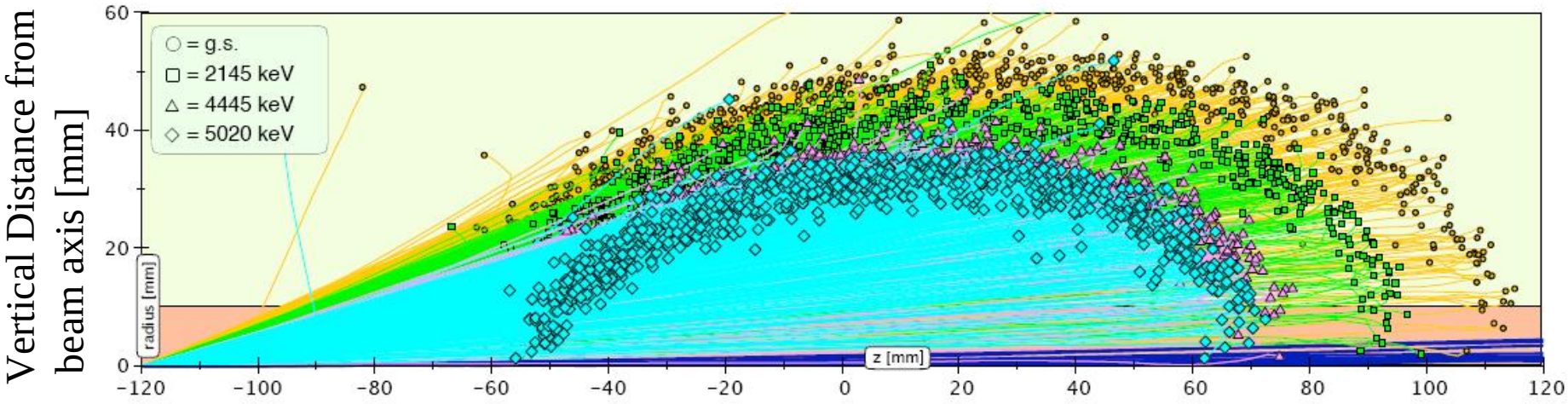

Vertical Distance from beam axis [mm]

Distance along beam axis from start of target region [mm]

FEMLAB Simulations

Potential - Fieldlines

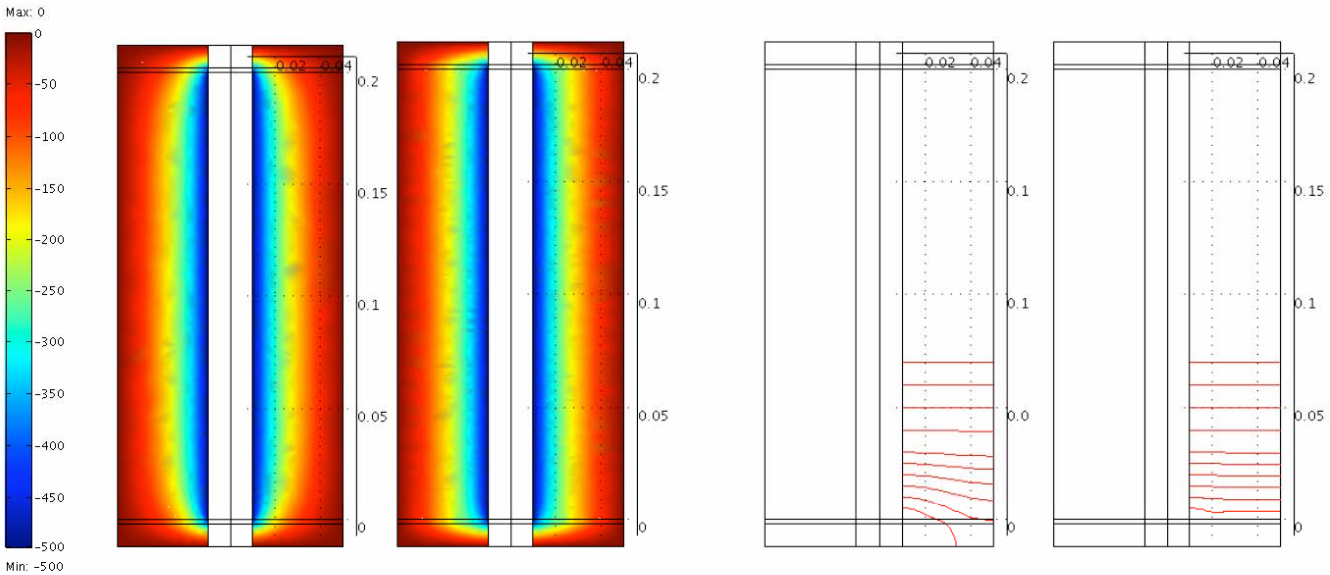

no pads 3 pads no pads 3 pads

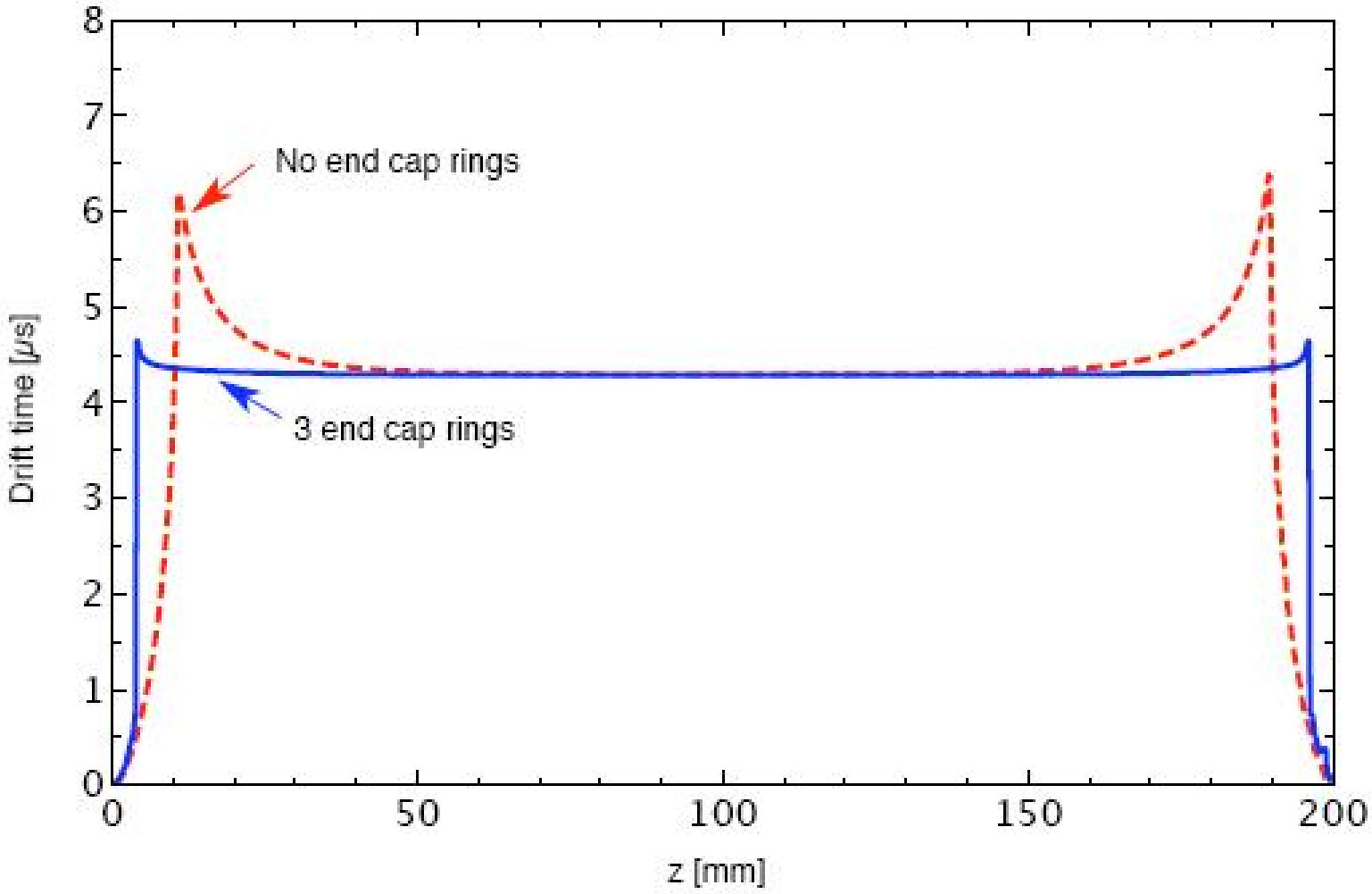

Drift time of electrons released at –500V cathode to the GEM, with and without voltage shaping rings, at the end caps, of radius 10mm.

Summary - TACTIC

- Detection of low energy charged particles for direct measurements of astrophysically interesting reactions with large solid angle coverage
- Measure dE/dx, E and timing to reconstruct track and identify particle
- Target and detector gas can be same or separate as determined by experimental constraints
- Surrounded by gamma array (BGO?)
- ➢ Design versatile enough to optimise configuration for other studies:
  - ➢ $^{12}C+^{12}C$ low energy fusion
  - ➢ $^{18}Ne(\alpha,p)^{21}Na$
  - ➢ ……..

- ➢ Design complete by end 2005
- ➢ Fabrication and assembly – early 2006
- ➢ Initial testing in York using alphas – spring 2006
- ➢ Testing in beam at TRIUMF in summer 2006

Many thanks to G. Ruprecht for most of these slides!

S.P. Fox, B. R. Fulton, A.M. Laird, P. Mumby-Croft
University of York

P. Amaudruz, L. Buchmann, T. Kirchner, M. Pavan,
J. Pearson, G. Ruprecht, P. Walden
TRIUMF