Research and Development of Commercially Manufactured Large GEM Foils

Bernd Surrow

TEMPLE UNIVERSITY

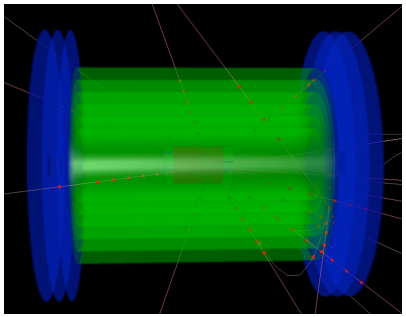

38th INTERNATIONAL CONFERENCE ON HIGH ENERGY PHYSICS

AUGUST 3 - 10, 2016
CHICAGO

Outline

- EIC (Electron-Ion Collider) Overview
- Micro-pattern R&D program
- EIC large area GEM detector R&D program
- Summary

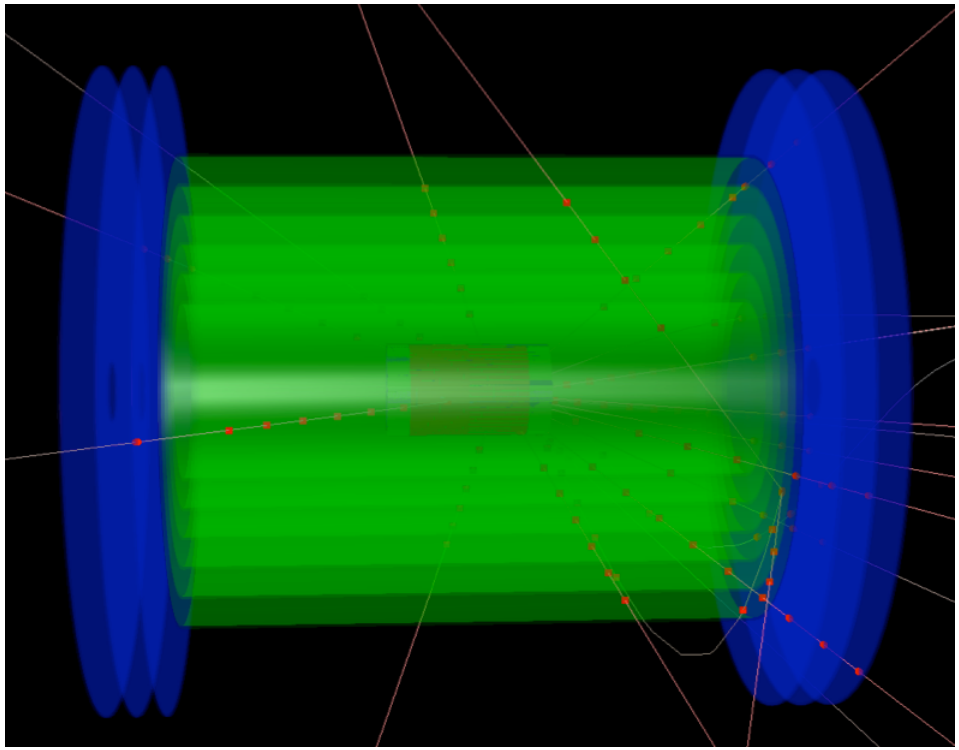

Outline

- EIC (Electron-Ion Collider) Overview
- Micro-pattern R&D program
- EIC large area GEM detector R&D program
- Summary

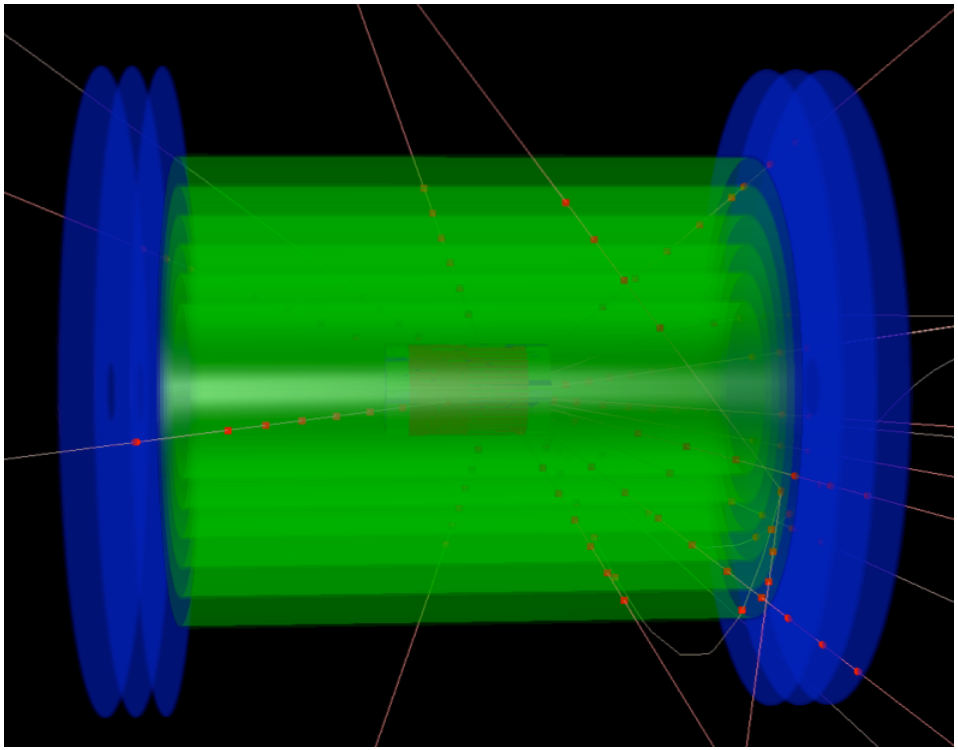

Long-range plan 2015: US Nuclear Science Advisory Committee

"We recommend a high-energy high-luminosity polarized EIC (Electron-Ion Collider) as the highest priority for new facility construction following the completion of FRIB (Facility for Rare Isotope Beams)"

EIC Overview

- Electron-Ion Collider: New ep/eA collider facility

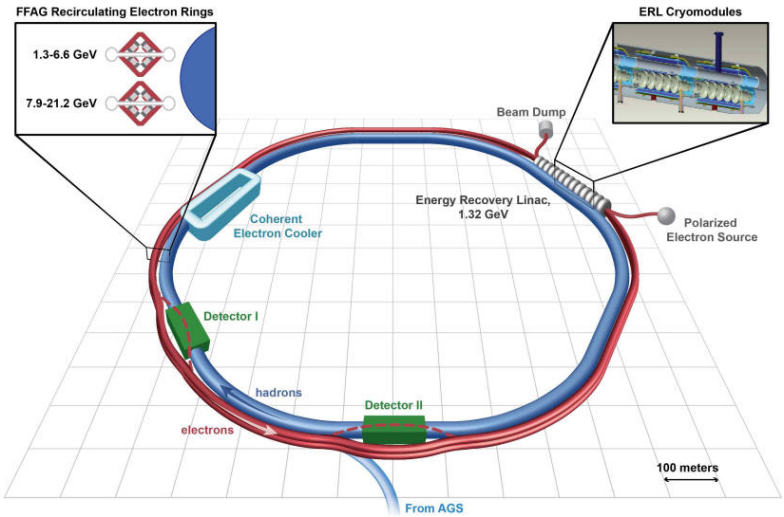

Brookhaven National Laboratory

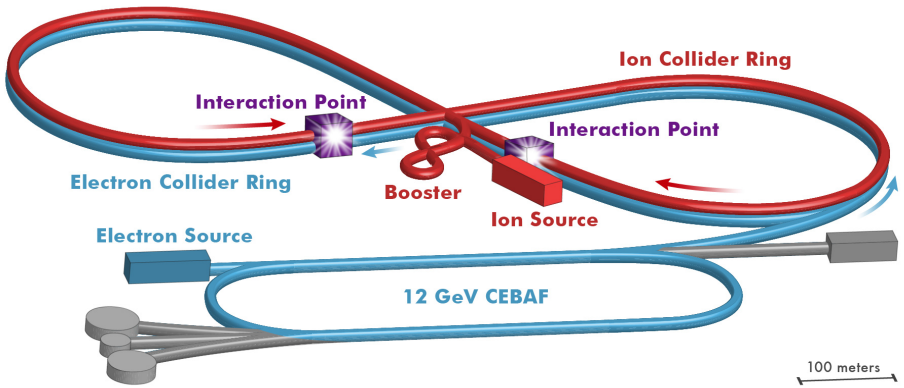

Jefferson Laboratory

- Energy range / Beam species:
  - 5-21 GeV polarized electrons
  - 50-250GeV polarized protons or up to 100GeV/n up to U ions
- Luminosity: ~10^{34} (~10^{32}) $cm^{-2}s^{-1}$ for ep (eA) collisions
- Polarization: Electrons, protons, ^{3}He

- Energy range / Beam species:
  - 3-10 GeV polarized electrons
  - 20-100GeV polarized protons up to Pb ions
- Luminosity: ~ 10^{34} e-nucleons cm^{-2} s^{-1}
- Polarization: Electrons, protons, d, ^{3}He

EIC Overview

- Overview: Study wide range of processes at EIC
  - Inclusive Measurements:
    - Nucleon spin structure
    - Nuclear structure
    - Gluon spin contribution
    - Elastic form factors
  - Semi-Inclusive Measurements:
    - TMD's
    - Spin structure functions
    - PDF's / Forms factors (flavor-tagged)
  - Exclusive Measurements:
    - DVCS
    - GPD's
    - Tomographic imaging of proton

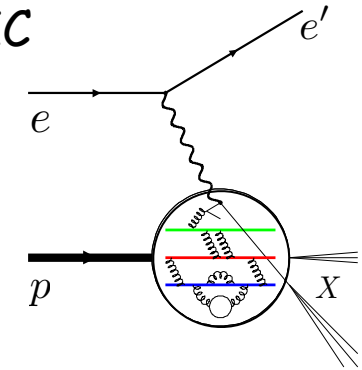

DIS

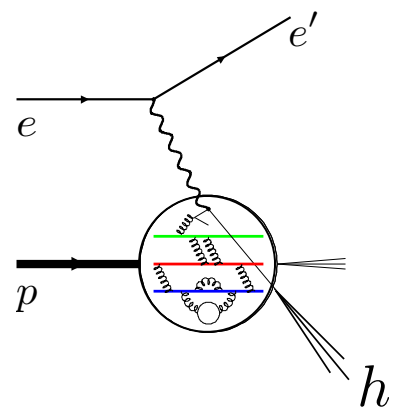

Semi-Inclusive DIS (SDIS)

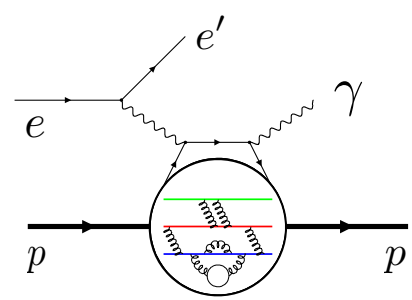

Deeply-Virtual Compton Scattering (DVCS)

EIC Overview

- ep/eA kinematics

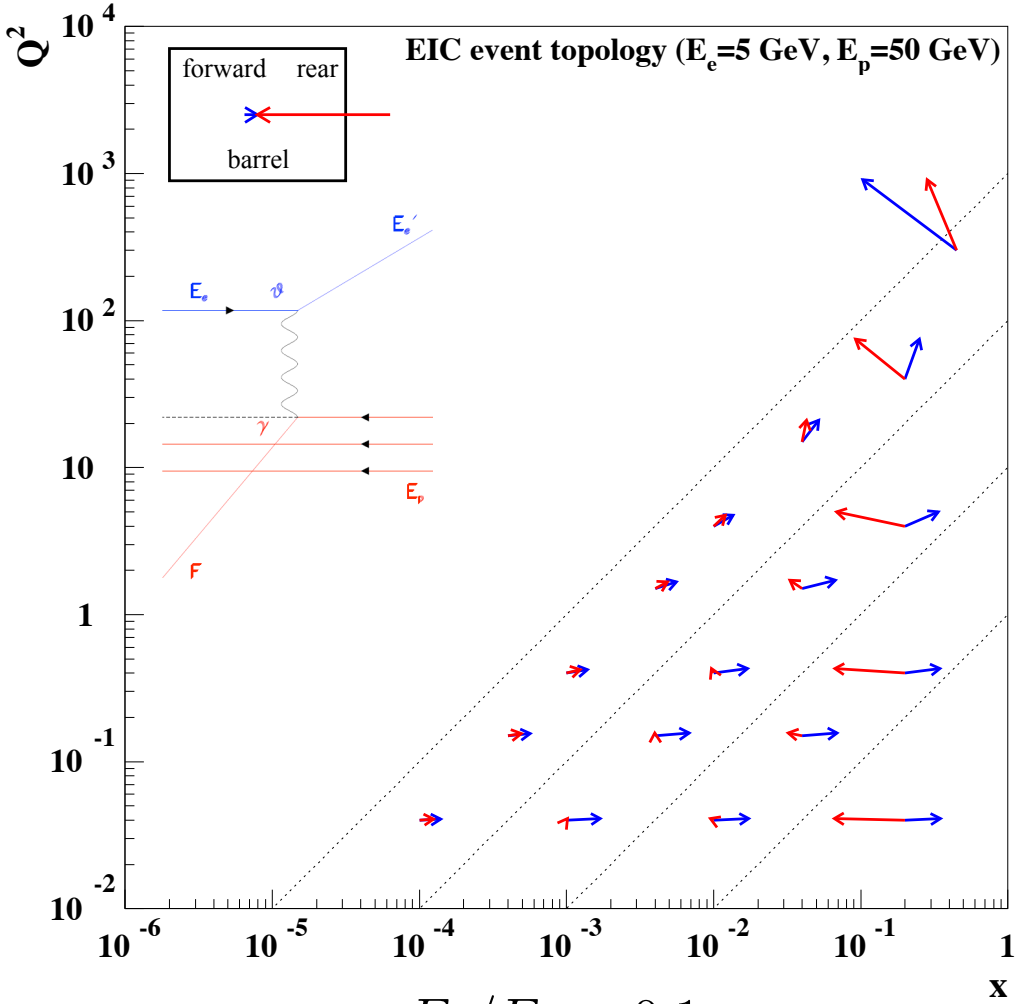

$E_e/E_p = 0.1$

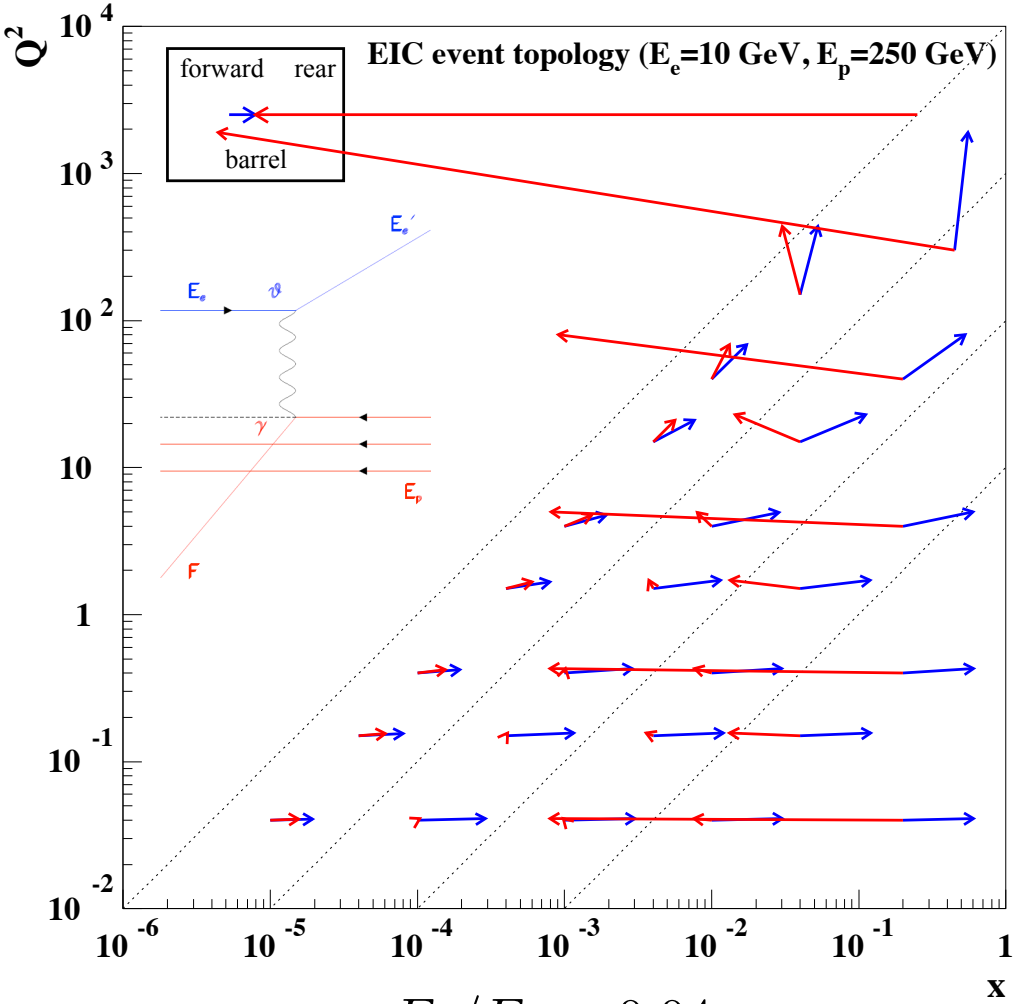

$E_e/E_p = 0.04$

EIC Overview

- Electron-Ion Collider: Detector concepts

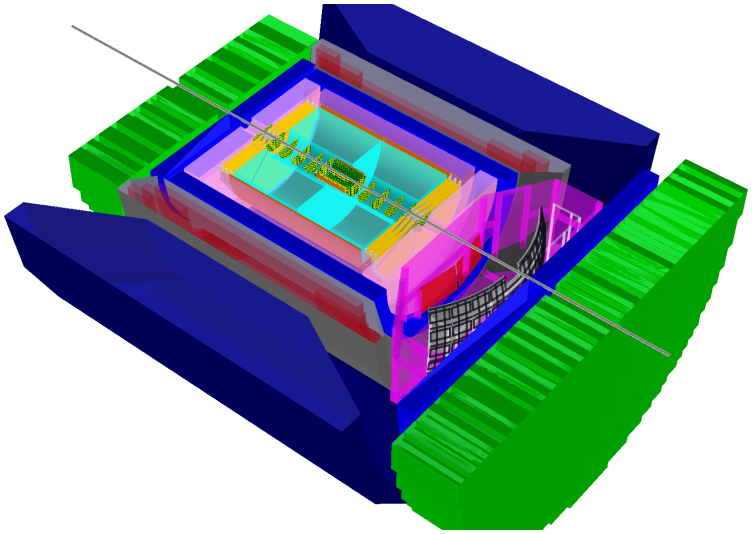

Detector concept: Brookhaven National Laboratory

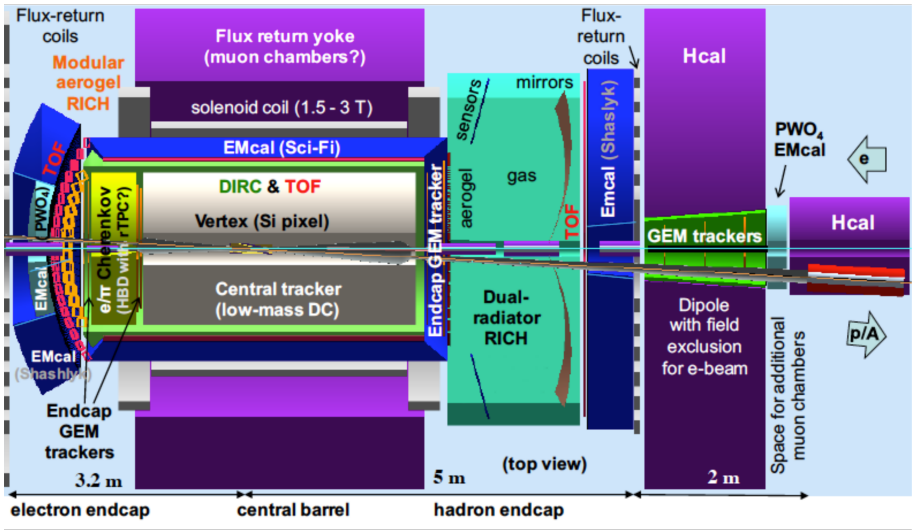

Detector concept: Jefferson Laboratory

- Main detector concepts:
  - Hermetic detector, low mass inner tracking system, good PID
  - Forward / Rear tracking: GEM
  - Forward hadronic calorimetry
  - Moderate radiation hardness requirements, low pile-up, low multiplicity

EIC Overview

- Detector R&D program
  - January 2011: BNL in association with JLab and DOE Office of NP, announced a generic detector R&D program to address the scientific requirements for measurements at a future EIC facility
  - Goals:
    - Enable successful design and timely implementation of an EIC experimental program
    - Develop instrumentation solutions that meet realistic cost expectations
    - Stimulate the formation of user collaboration to design and build experiments
  - Funded by DOE, Office of NP, managed by BNL with ~$1M-$1.5M / year
  - Program explicitly open to international participation
  - Key to success: Standing EIC Detector Advisory Committee

Micro-pattern detector R&D program

Overview

- R&D effort focuses on intermediate tracking system:
  - Barrel tracking system based on MicroMegas detectors (Dedicated barrel / curved MM EIC R&D program) manufactured as cylindrical shell elements and
  - Rear / Forward tracking system based on triple-GEM detectors manufactured as planar segments (Collaboration of FIT/ TU / UVA)
- R&D effort - Main strategy:
  - Design and assembly of large cylindrical MicroMegas detector elements and large planar triple-GEM detectors
  - Test and characterization of MicroMegas and triple-GEM prototype detectors
  - Design and test of new, common chip readout system employing CLAS12 'DREAM' chip development, ideally suited for micro-pattern detectors
  - Utilization of light-weight materials
  - Development and commercial fabrication of various critical detector elements
  - European/US collaborative effort on EIC detector development (CEA Saclay, and Temple University)

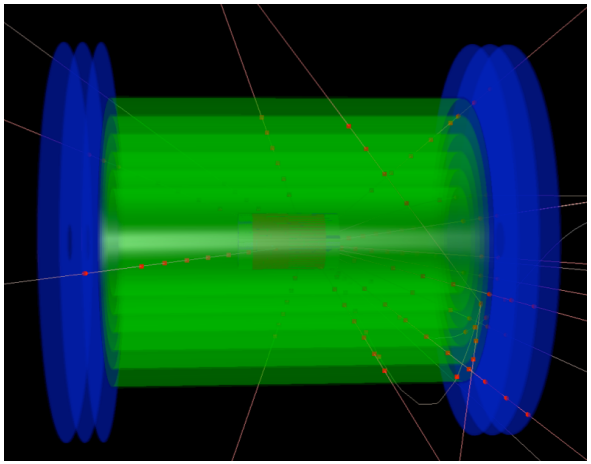

Micro-pattern detector R&D program

MicroMegas detector program

- Curved MicroMegas for barrel based on carbon structure glued on thin PCB
- Idea validated for CLAS12 tracker
- Need to increase size: PCB size, mesh tension, capacitance and gain homogeneity
- Transition to resistive technology for MicroMegas detectors / No measurable sparking

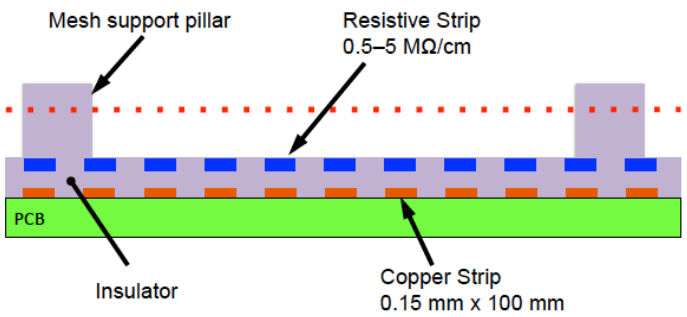

T. Alexopoulos et al., Nucl. Instrum. Meth. A640 (2011) 110.

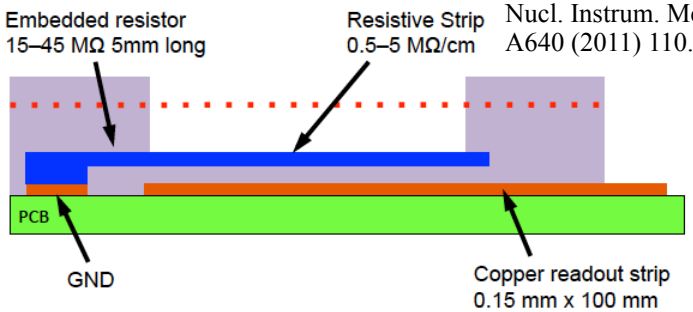

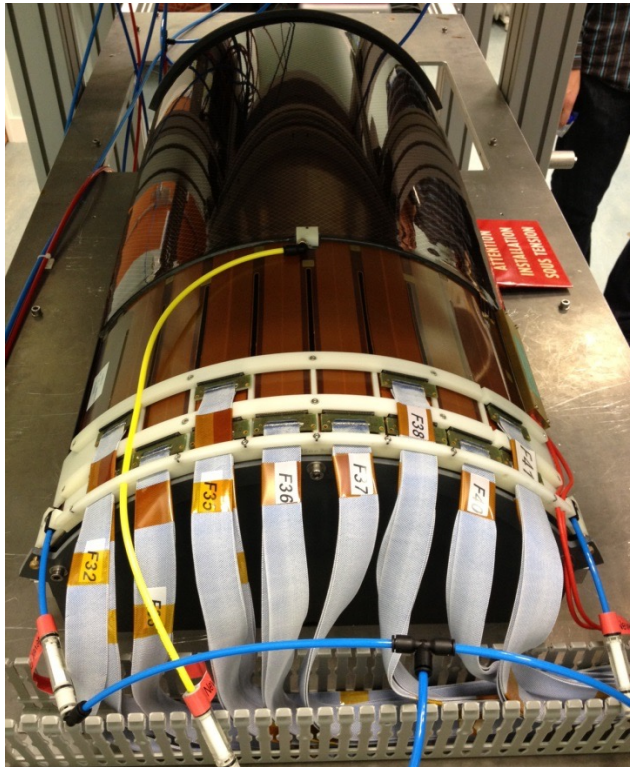

- First dedicated EIC large radius resistive 1D (Z) MM prototype 120 degree section, R=22.5cm, L=45cm
- Further extensive cosmic-ray testing / Analysis in progress
- Next: 2D design (C / Z)

Micro-pattern detector R&D program

Triple-GEM detector program

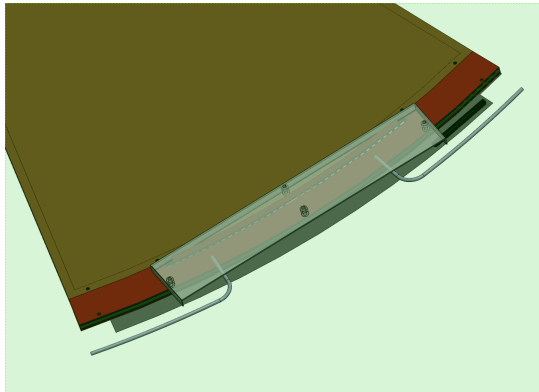

- r_{in} ~ 10cm and r_{outer} ~ 100cm
- Different assembly techniques (Stretching / Frame support / Spacer) by FIT, TU and UVA
- Light-weight design: < 1% X_0
- All services (HV, gas and FEE connections) at outer radius

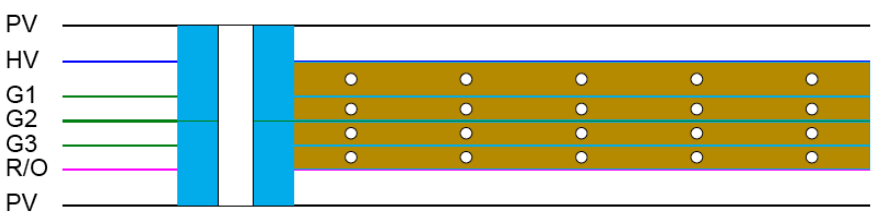

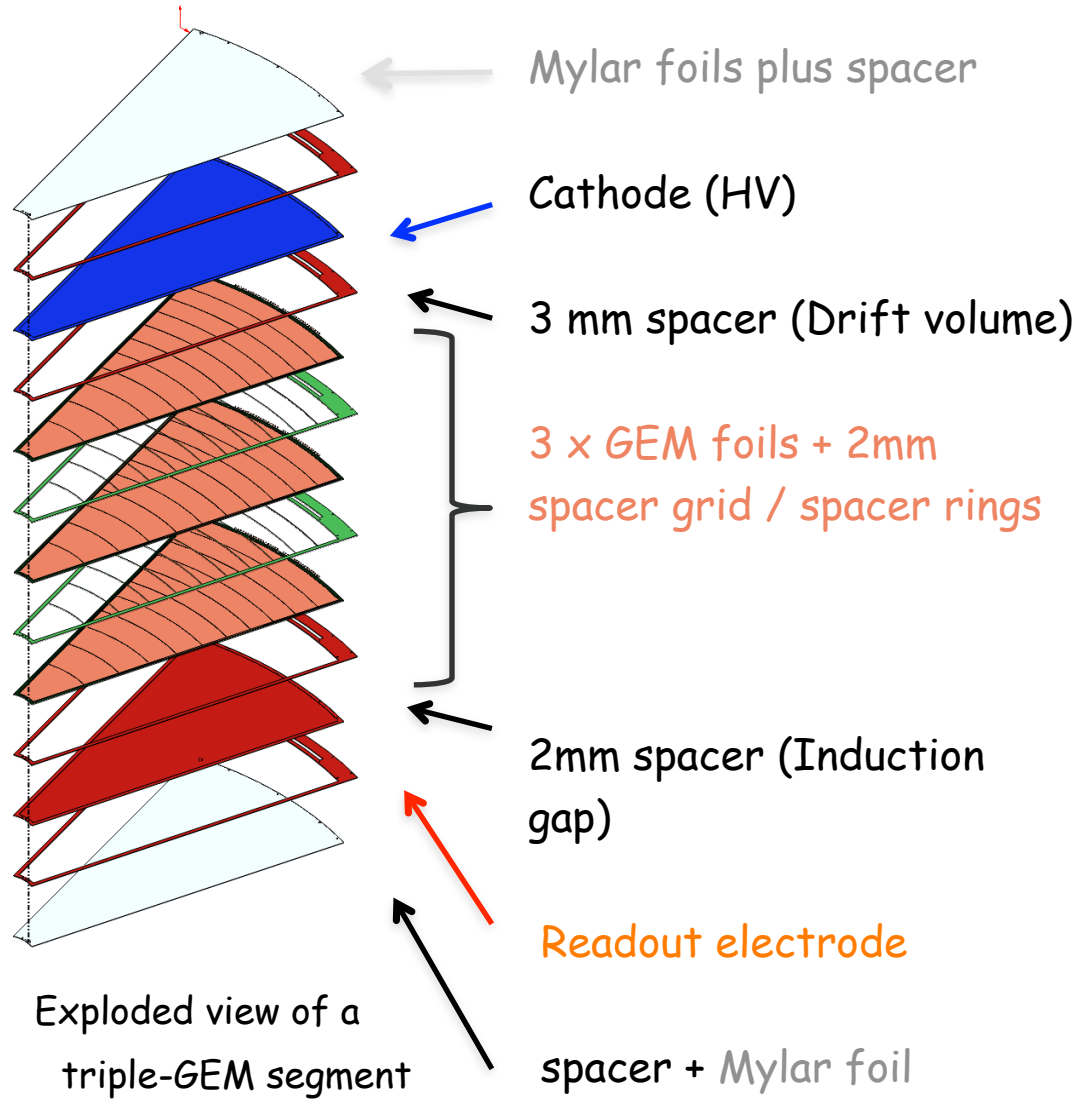

Exploded view of a triple-GEM segment

EIC large area GEM detector R&D program

- EIC forward / rear GEM planer detectors

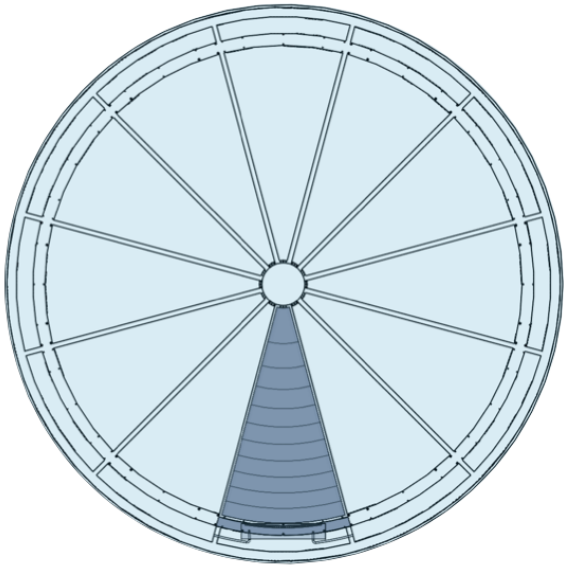

- Concept of GEM rear and forward tracking disks supporting 12 30degree sectors
- Overlapping edges to reduce dead areas
- Material based on carbon fiber

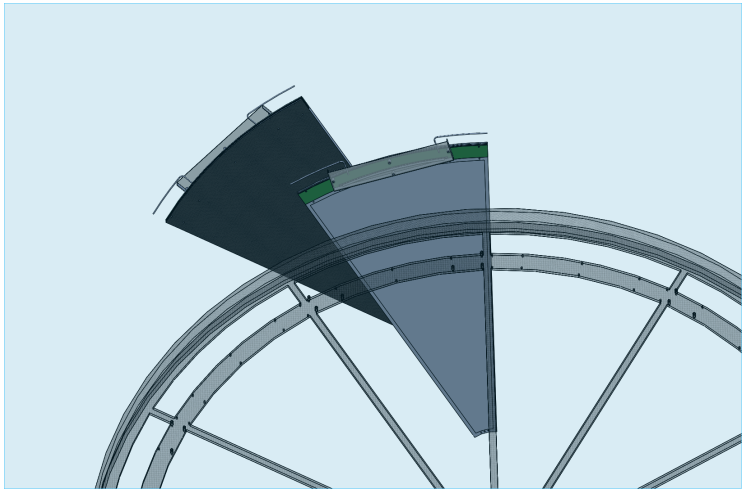

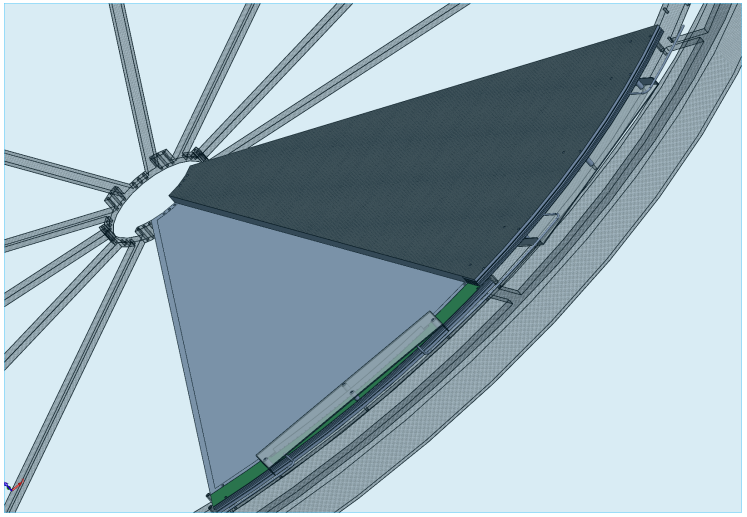

EIC large area GEM detector R&D program

- EIC triple-GEM detector GEM foil layout

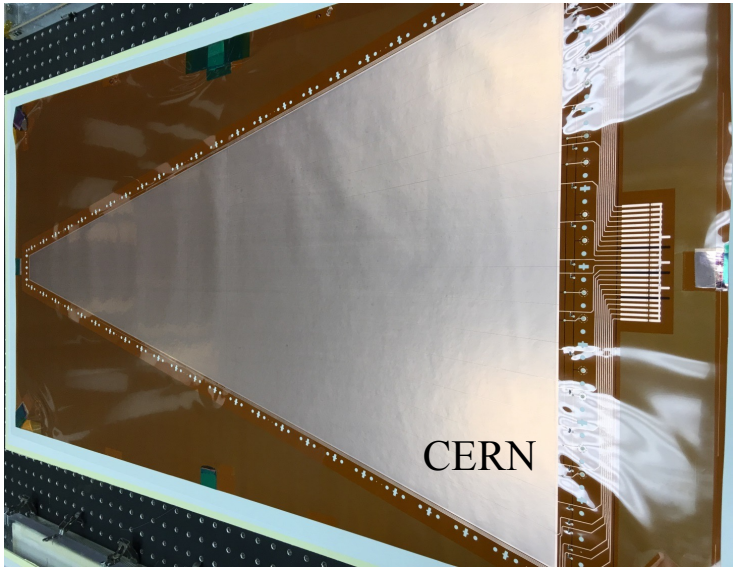

Courtesy: FIT, UVA

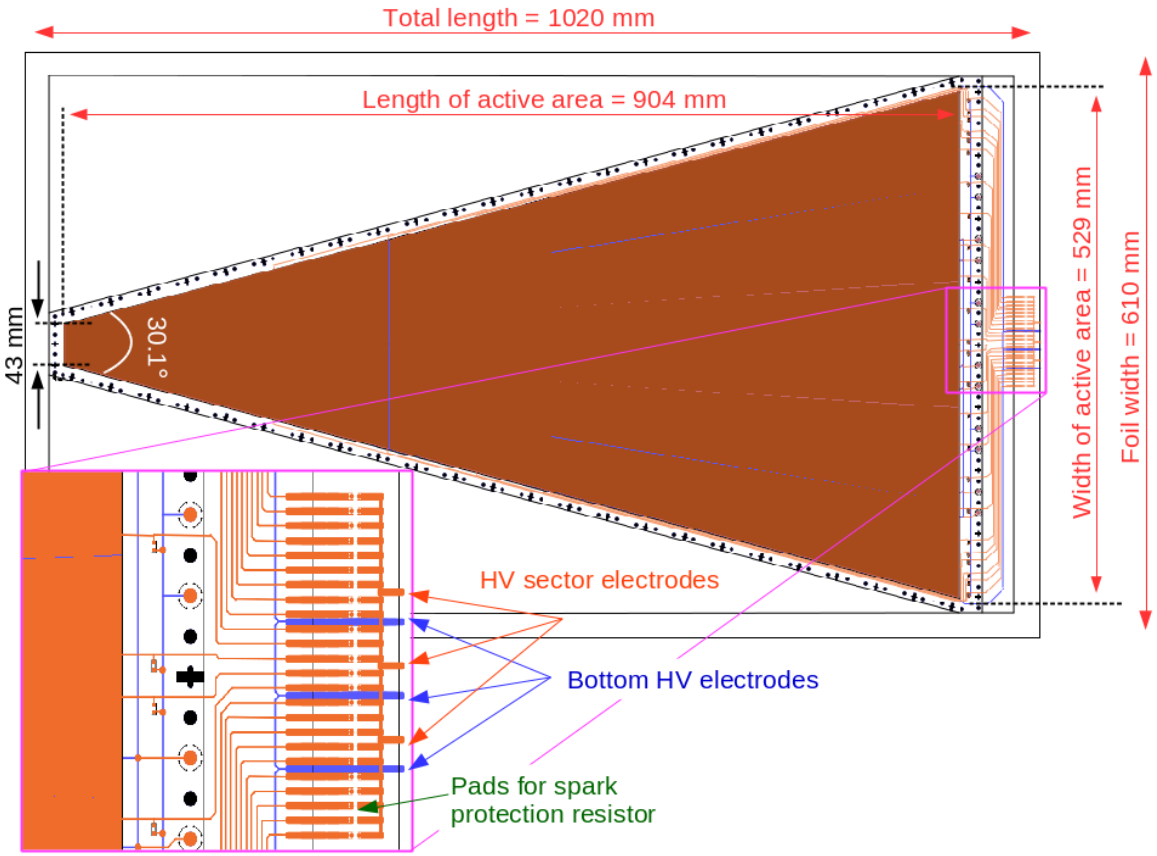

- Common GEM foil design by FIT, TU, UVA
- All HV connections at outer radius
- 8 radial and 16 azimuthal HV segments with about 100cm^2 each

EIC large area GEM detector R&D program

EIC triple-GEM detector 2D readout foil layout

- r-φ symmetry for 2D readout layer
- Lines at constant φ angle read out separately
- Pads at constant r (BLUE) connected and readout separately
- Routing lines in orange
- Connection to SAMTEC multi-pin connector connected to APV / DREAM readout module

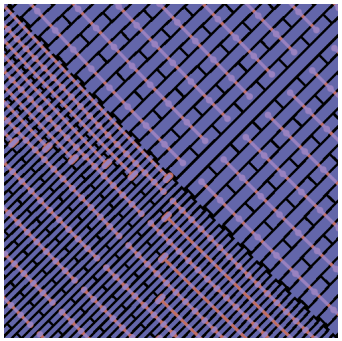

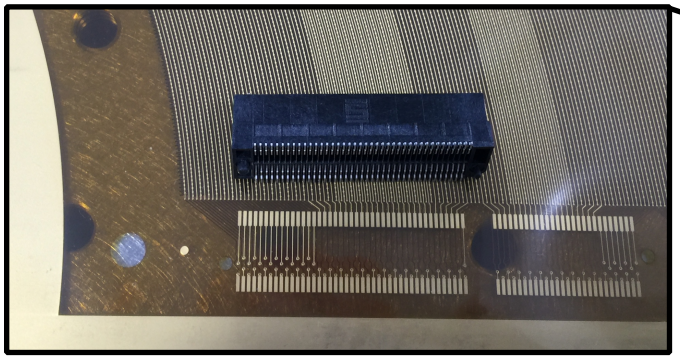

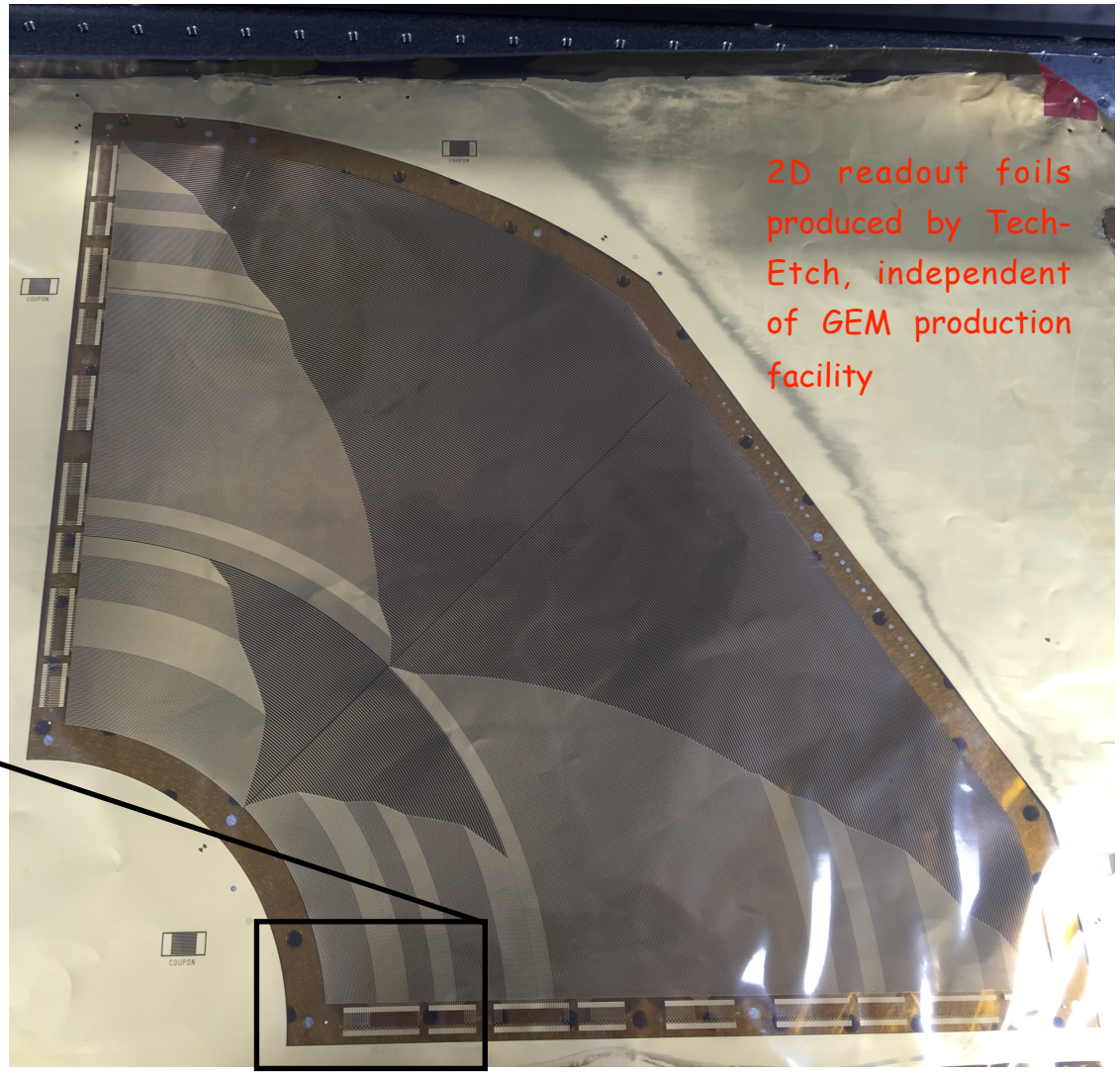

EIC large area GEM detector R&D program

EIC triple-GEM detector Front-End Electronics

MM / Triple-GEM prototypes in Saclay cosmic-ray teststand

- FEE development by Saclay profiting from DREAM chip design first used for MicroMegas detector
- Adapted for triple-GEM detector prototype besides APV based readout

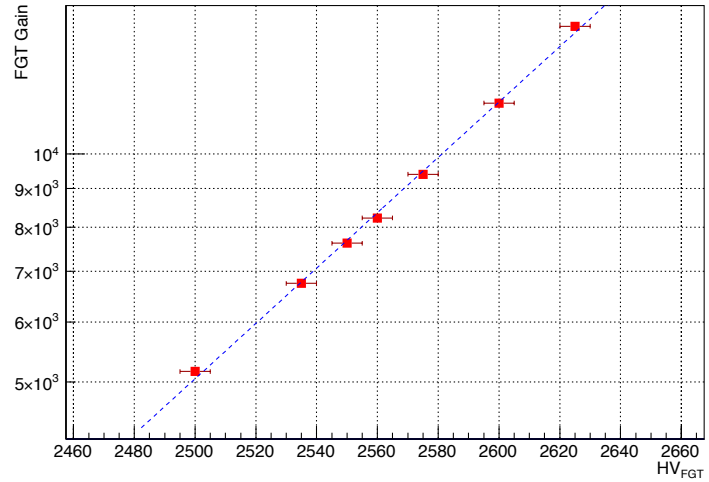

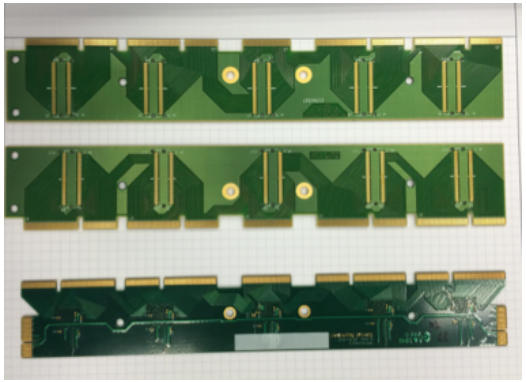

Adapter Dream card

APV card

	Dream Chip	APV25-S1 Chip
Number of channels	64	128
Memory size	512	160
Latency	16μs	8μs
Noise (e-RMS)	2100 (On 180pF)	1200 (On 20pF)
Sampling frequency	1-40MHz	10-50MHz
Dynamic range	50-600fC	150fC
Input capacitance	150pF	18pF
Shaping time	70ns	50ns

EIC large area GEM detector R&D program

Commercial GEM foil production: Overview

- Commercial production of GEM foils by Tech-Etch Inc. starting first with 10X10cm^2 and 40X40cm^2 double-mask technique using Kapton base material
- Switch to single-mask technique using Apical base material up to 50X50cm^2
- Continuous feedback between Tech-Etch Inc. and TU resulted in excellent GEM foils in terms of electrical and optical uniformity
- Critical: "There should be enhanced efforts on industrialization. CERN management will talk to large LHC collaborators to consider placing orders outside CERN" (Silvia Dalla Torre, RD51 mini week, June 6-9, 2016) - Essential for further development towards larger foils at Tech-Etch Inc.

Single-Mask GEM foil (40cm X 40cm) Single-Mask GEM foil (50cm X 50cm)

EIC large area GEM detector R&D program

Commercial GEM foil production: Electrical tests

- Setup of leakage current measurement at Temple University
- All Tech-Etch GEM foil leakage currents have been measured consisting of:
  - 3 manufacturing lots of 10 x 10 cm^2 consisting of 6/12/6 foils
  - 3 40 x 40 cm^2 foils
- All foils were found to display consistent leakage currents with typical values < 1 nA
- Tech-Etch found same results when measuring the leakage current prior to shipping

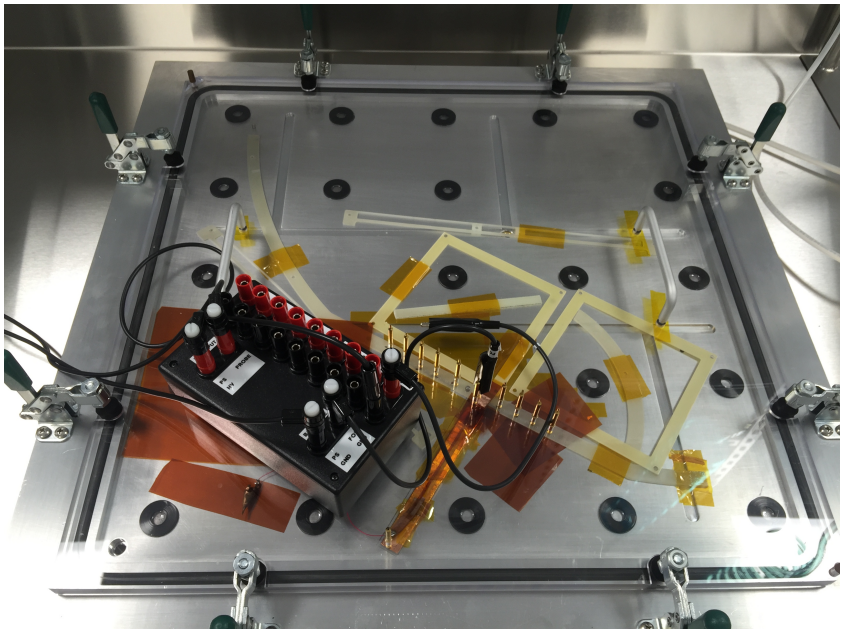

- Critical step for achieving low leakage current was changing polyamide material from Kapton to Apical
- Leakage currents from 3 10 x 10 cm^2 single mask GEM foils produced by CERN have also been measured
- CERN foils use same polyamide material (Apical) as Tech-Etch
- CERN foils were also found to have typical leakage current < 1 nA

EIC large area GEM detector R&D program

- Commercial GEM foil production: CCD scanning

  - Optical properties of foils measured using GEM scanner based on 2D CCD scanner
  - Initial setup: X/Y stage 30cm / 15cm
  - High resolution CCD camera with 12 X microscope zoom lens
  - Light scheme on top and bottom allows to measure outer and inner hole diameter besides pitch
  - Image analysis and control based on MathLab

U. Becker et al.,
Nucl. Instrum. Meth. A556 (2006) 527.

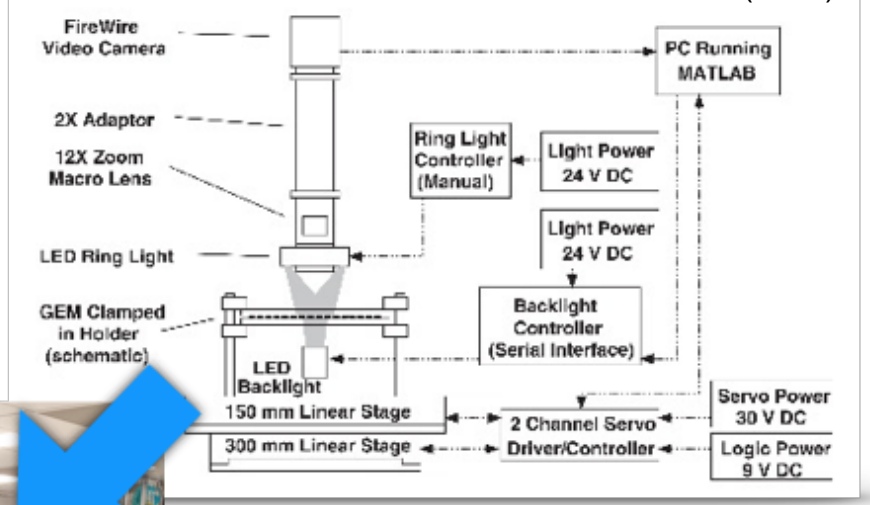

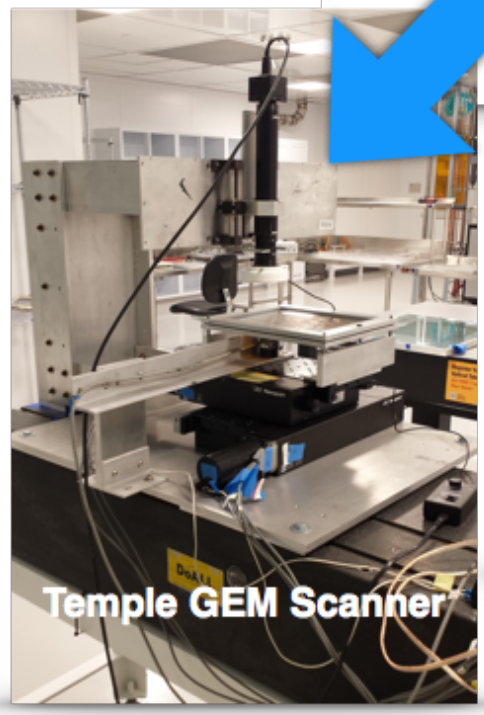

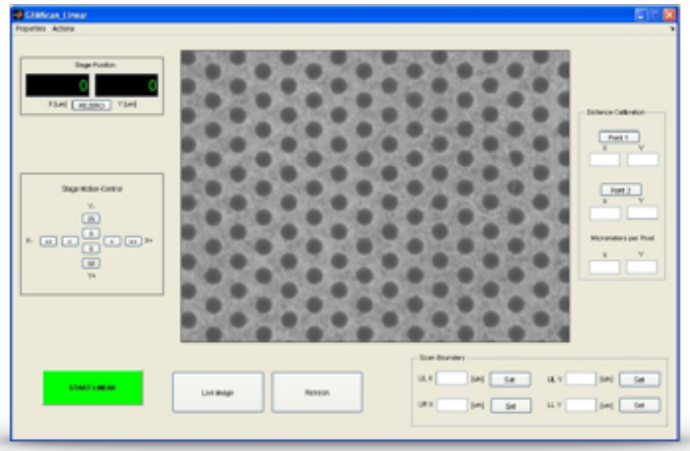

MATLAB GUI

EIC large area GEM detector R&D program

Commercial GEM foil production: Optical uniformity (1)

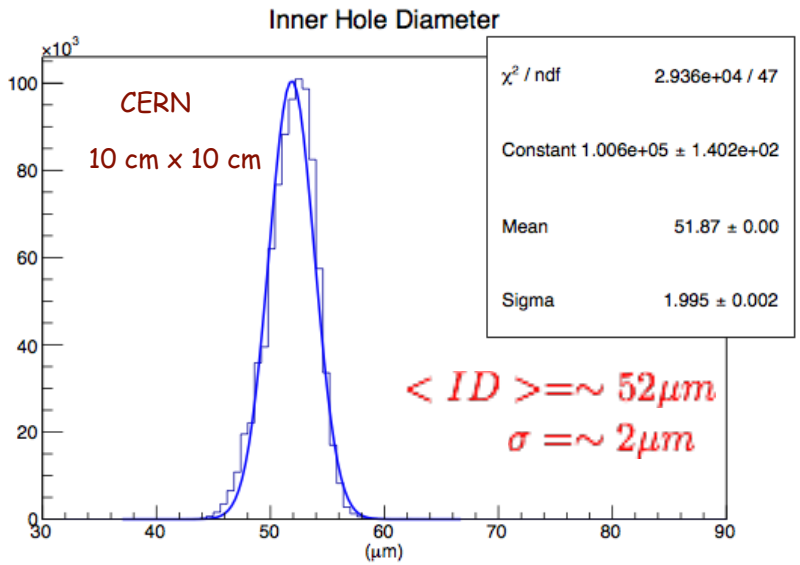

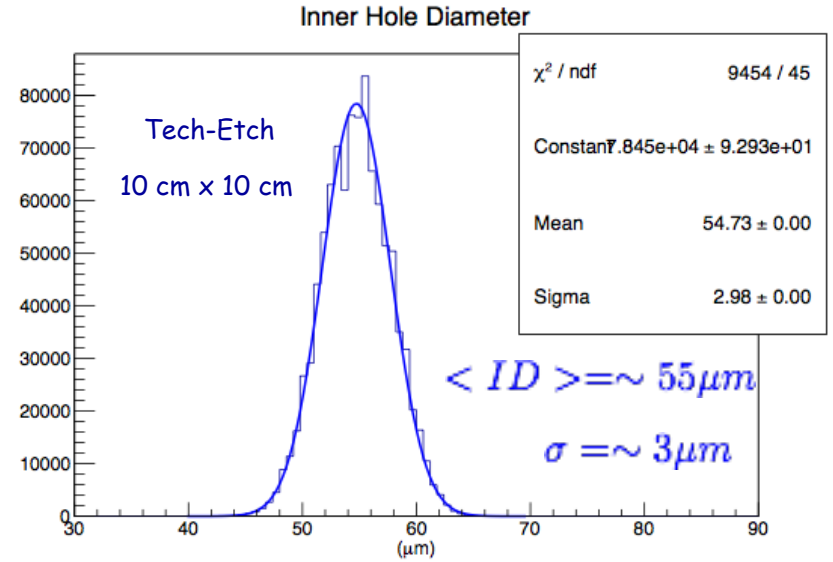

- Inner hole diameter distributions comparison for CERN and Tech-Etch foils
- All foils have been optically scanned to measure pitch, inner/outer hole diameters, and their uniformity
- In general: CERN foils show similar geometrical properties as Tech-Etch foils

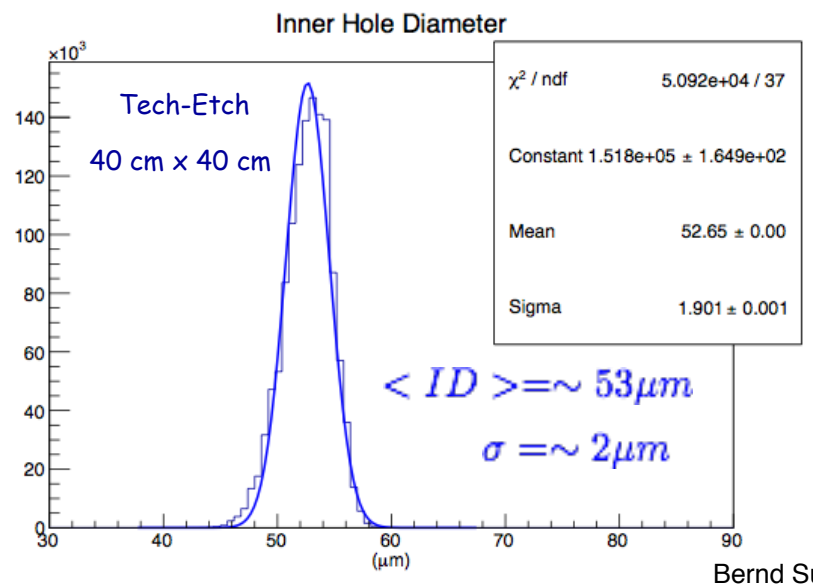

EIC large area GEM detector R&D program

Commercial GEM foil production: Optical uniformity (2)

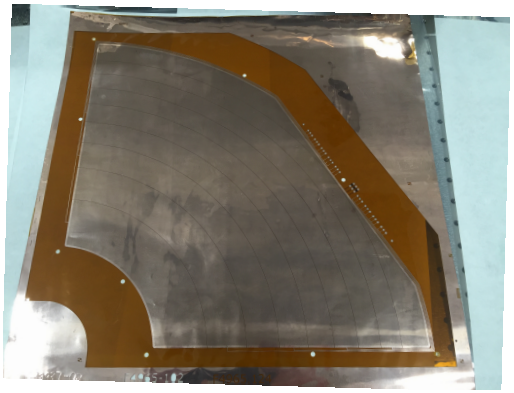

- Split 40cmX40cm^2 GEM foil into 6 areas
- Average deviation from inner (outer) hole mean is found to be small, 1-2μm and comparable to CERN foils
- Inner hole diameter deviation from mean
- Red arrows mark +/- 10μm position

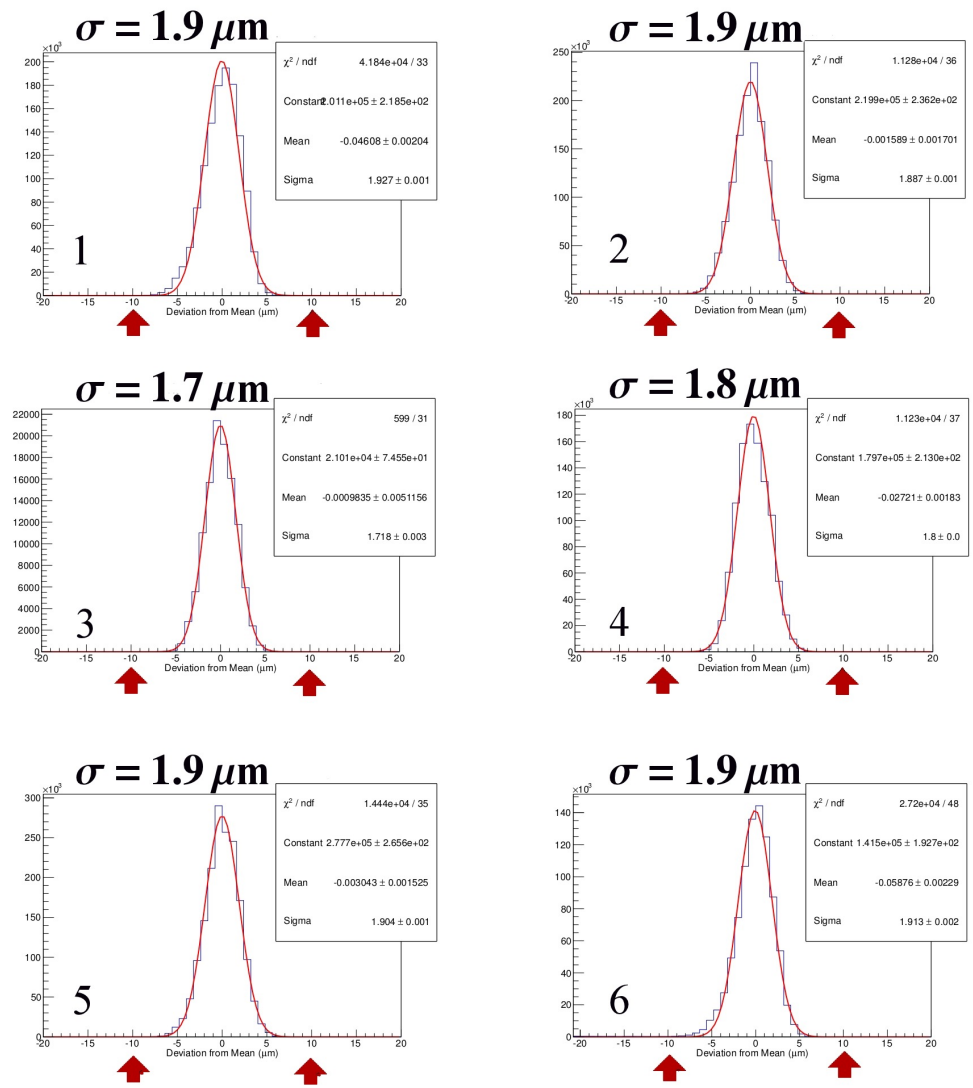

EIC large area GEM detector R&D program

- Commercial GEM foil production: CCD scanner upgrade
  - Upgrade CCD camera to accommodate larger sizes using long Newport linear stages
  - Machining of all parts (~90) underway / Projected completion by end of August 2016
  - Assembly and setup in September 2016
  - Test scan expected in late fall 2016
  - Starting in late fall 2016:
    - Samples: 40cm X 40cm foils (EIC) / 50cm X 50cm (ALICE) and larger EIC prototype (CERN) in collaboration with FIT and UVA
    - Other samples: CMS large foils - Independent optical probe of gain uniformity in collaboration with CMS / CERN

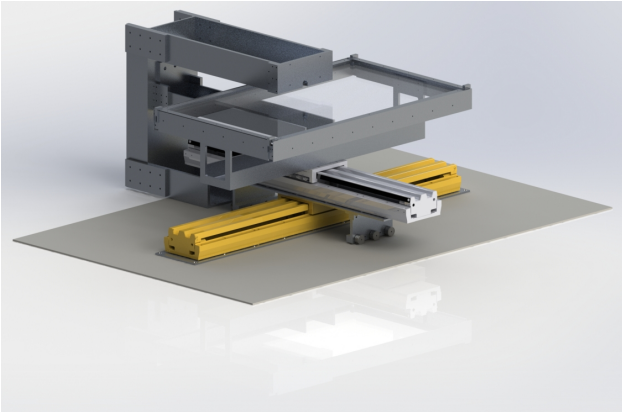

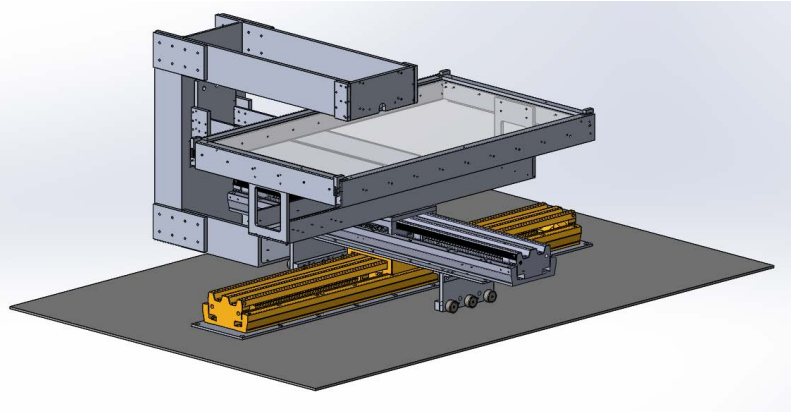

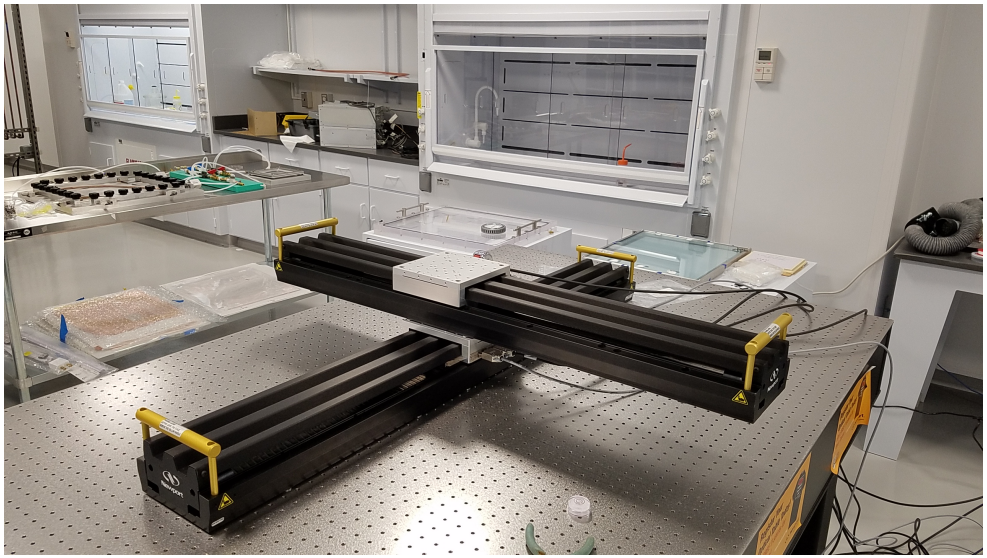

EIC large area GEM detector R&D program

- Prototyping phase

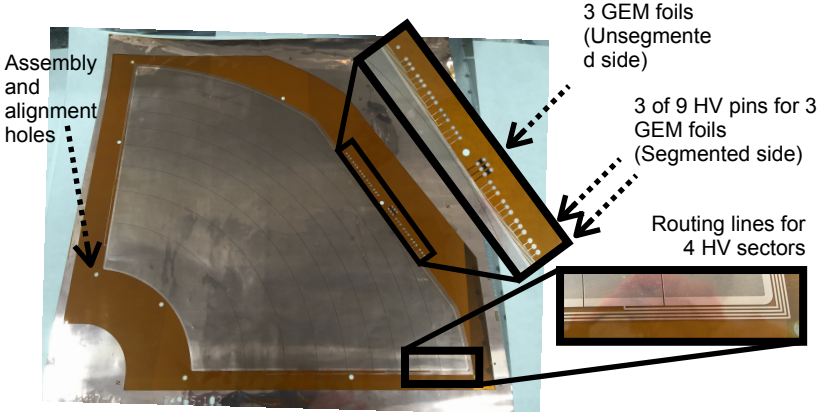

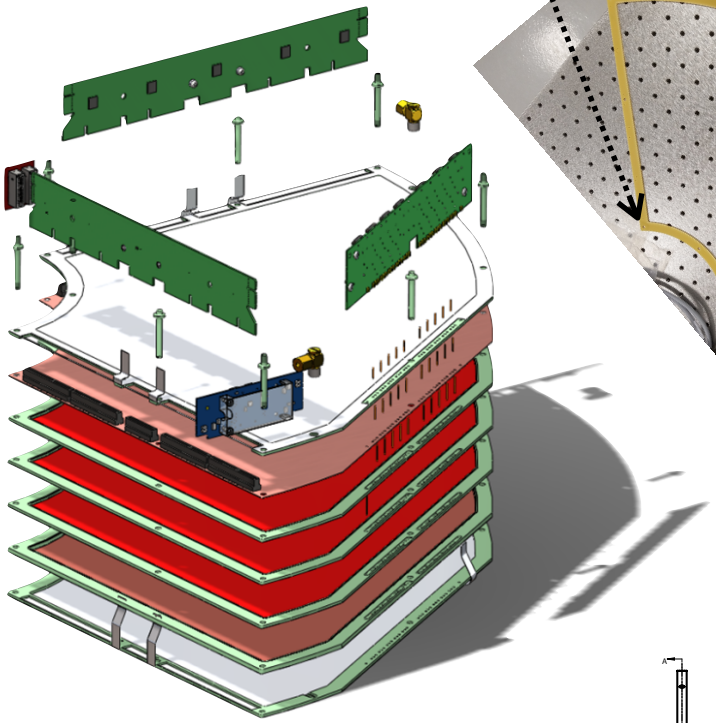

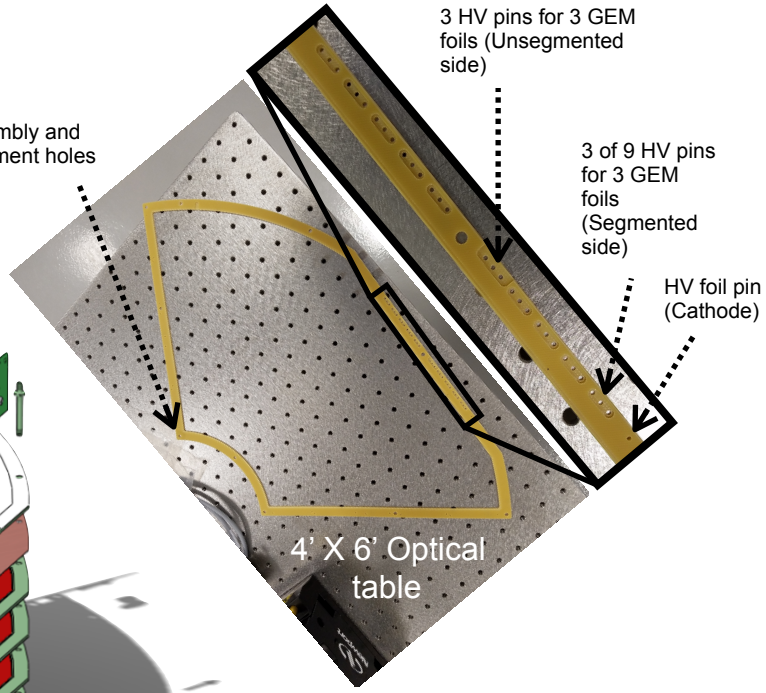

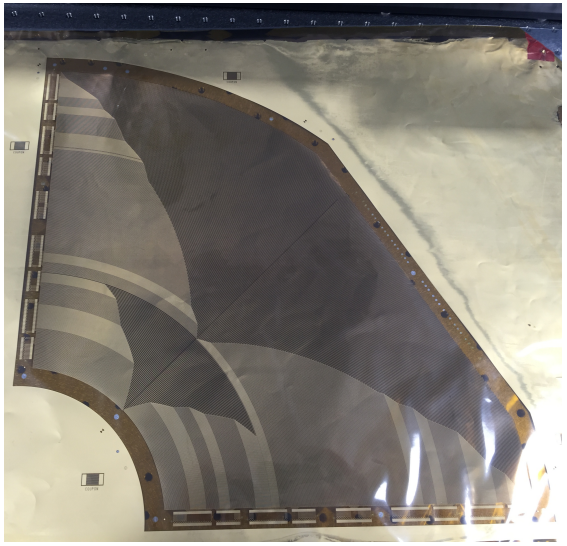

Prototype based on STAR FGT design using commercially produced components: GEM foils, 2D readout foil, frames and spacer rings / Test using X-ray scanner and cosmic-rays

Kapton rings: 2"

(2 types, 2mm and 3mm)

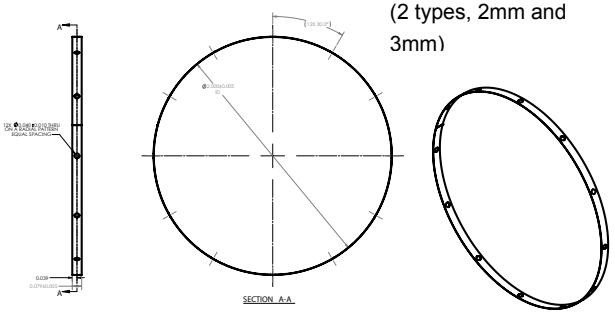

Summary / Outlook

- EIC detector designs feature micro-pattern detectors in Barrel (MicroMegas) and Forward/Rear direction (GEM) using common chip readout system

- Planar rear and forward triple-GEM detectors with r_{in} ~ 10cm and r_{outer} ~ 100cm / Light-weight material - Common prototype GEM foil design by FIT, TU and UVA

- Commercial fabrication of various components including HV foils, 2D readout foils and GEM foils by Tech-Etch Inc.
  - RD 51 stressed the need for industrialization
  - Tech-Etch Inc. has successfully produced single-mask GEM foils up to 50X50cm^2
  - Excellent electrical and optical performance comparable to CERN using Apical base material
  - Further development relies critically on large-scale orders

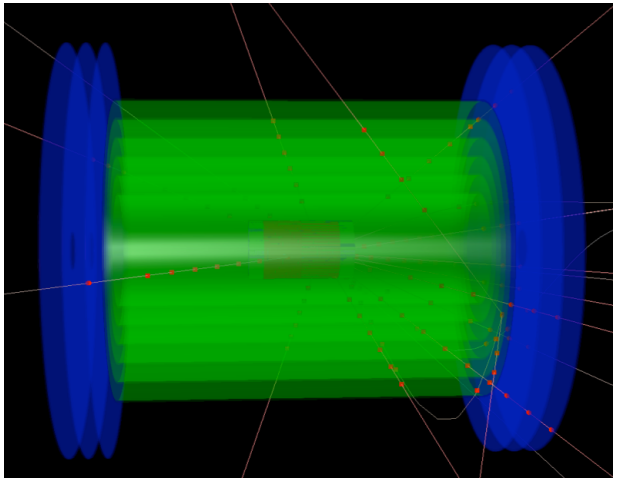

M. Posik and B. Surrow,
Nucl. Instrum. Meth. A802 (2015) 10.

- Build and test (X-ray scan and Cosmic-ray testing) larger prototypes