DAQ and online control system for new GEM detectors in the endcap muon system of the CMS experiment

José D. Ruiz-Álvarez
on behalf of the CMS Collaboration

August 4, 2016

Outline

Gas Electron Multiplier detector at CMS experiment

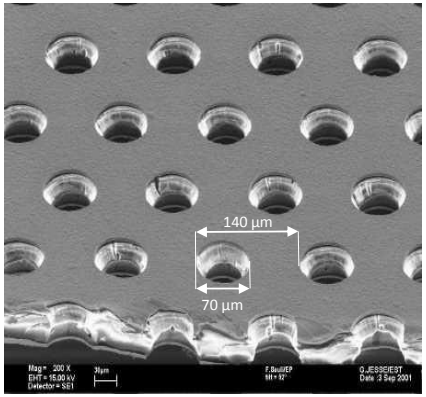

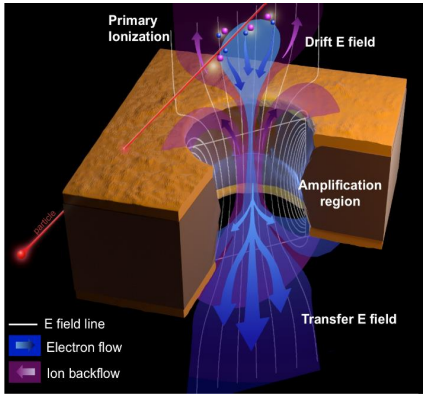

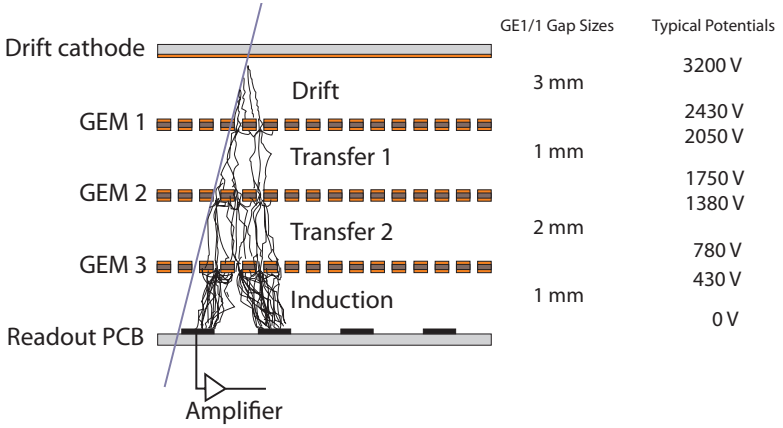

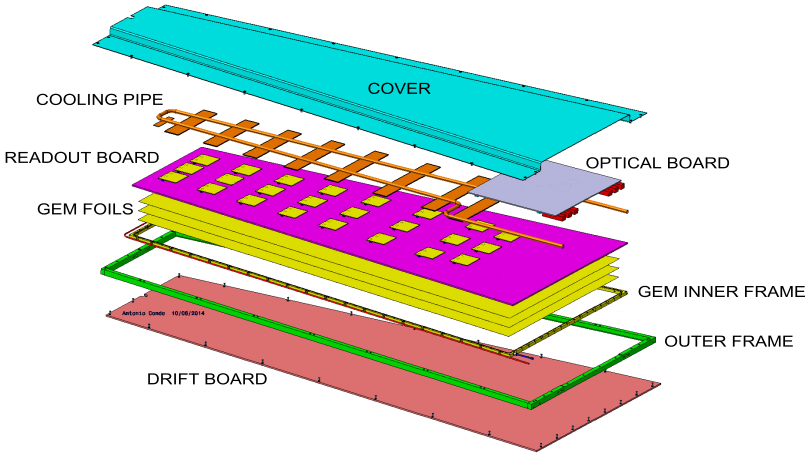

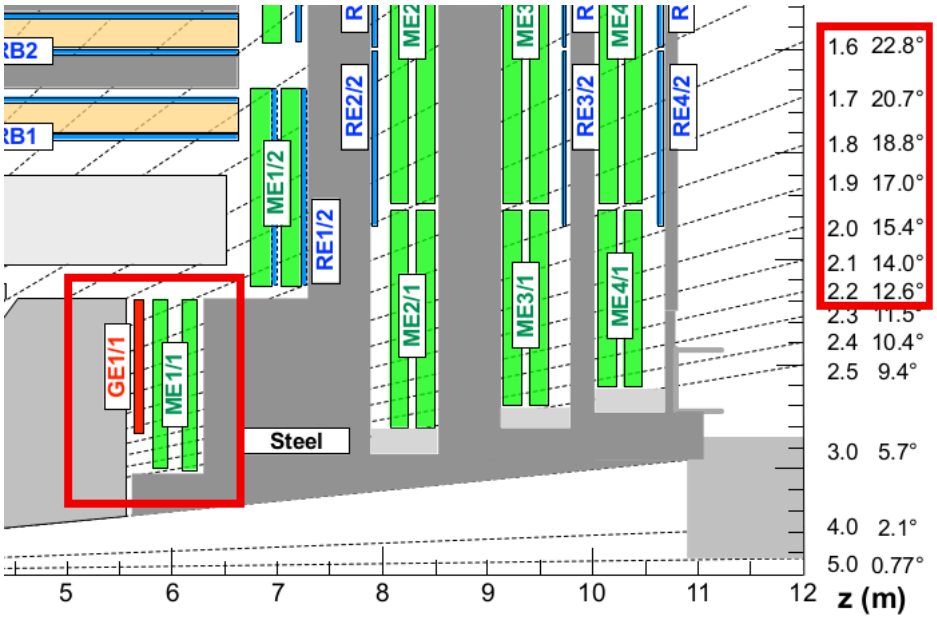

Electronics

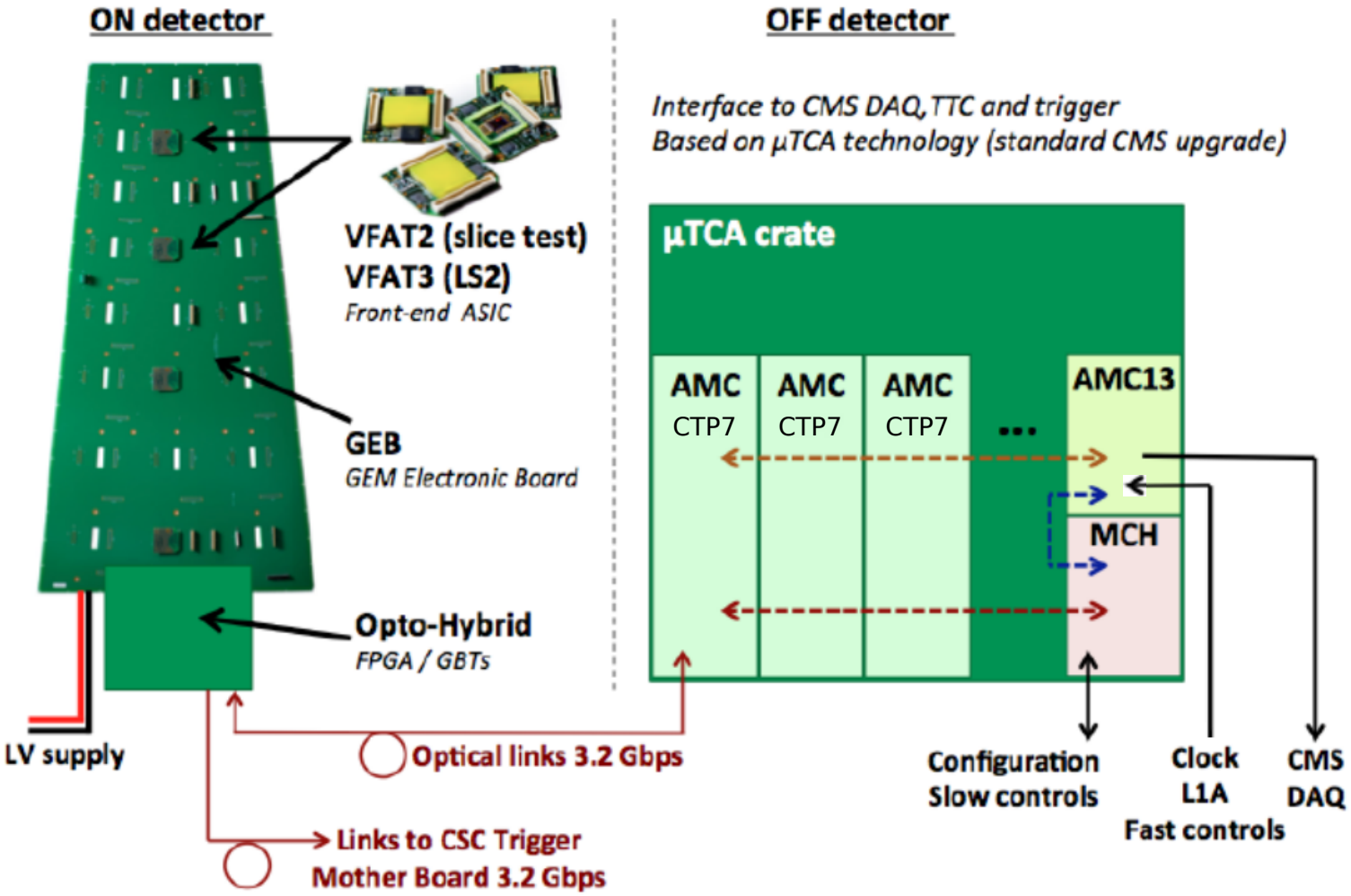

Figure 5.9. Overview of ths CMS GEM electronics system.

Electronics

More details can be found at
Brian Dorney and Cesare Calabria posters:
6 August, 18:00
New gas electron-multiplier detectors for the innermost stations of the endcap muon system of the CMS experiment: design, prototype performance, and installation
`http://indico.cern.ch/event/432527/contributions/1071758/`
New micropattern gas detectors for the endcap muon system of the CMS experiment at the high-luminosity LHC
`http://indico.cern.ch/event/432527/contributions/1071768/`

Front-end electronics

VFAT

- Readout strips connected to VFAT
- 128 channels
- Preamplifier, shaper and fraction discriminator (for VFAT3)
- Currently working with VFAT2, VFAT3 under development
- 24 VFAT chips per GE1/1 chamber

Optohybrid

- Interface between on-detector and off-detector electronics
- Concentrate the 24 readout sectors
- Two optical lines: Tracking and Trigger, tracking configuration, control commands

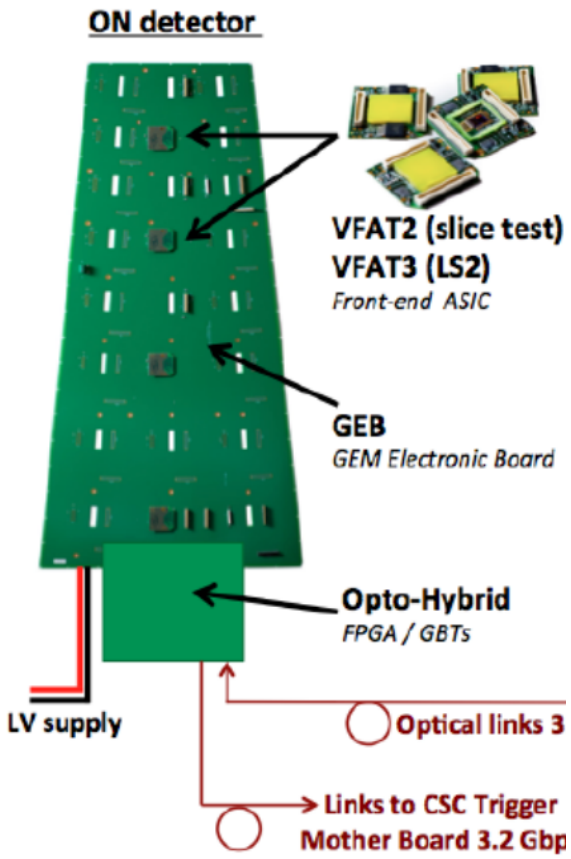

Back-end electronics

AMC (Advanced Mezzanine Card)

- Depending on card, up to 76 optical transceivers and receivers
- Operation capabilities at least 10 Gbps
- Currently testing GLIB (Gigabit Link Interface Board) and CTP7 (Calorimeter Trigger Processor)
- SDRAM buffer → data quality

AMC13

- Interface to CMS DAQ and TTC

μTCA

- Interface between detector and CMS DAQ
- Currently supporting 10 GB/s data throughput with IPbus and fiber DAQ outputs.
- With standard MCH module

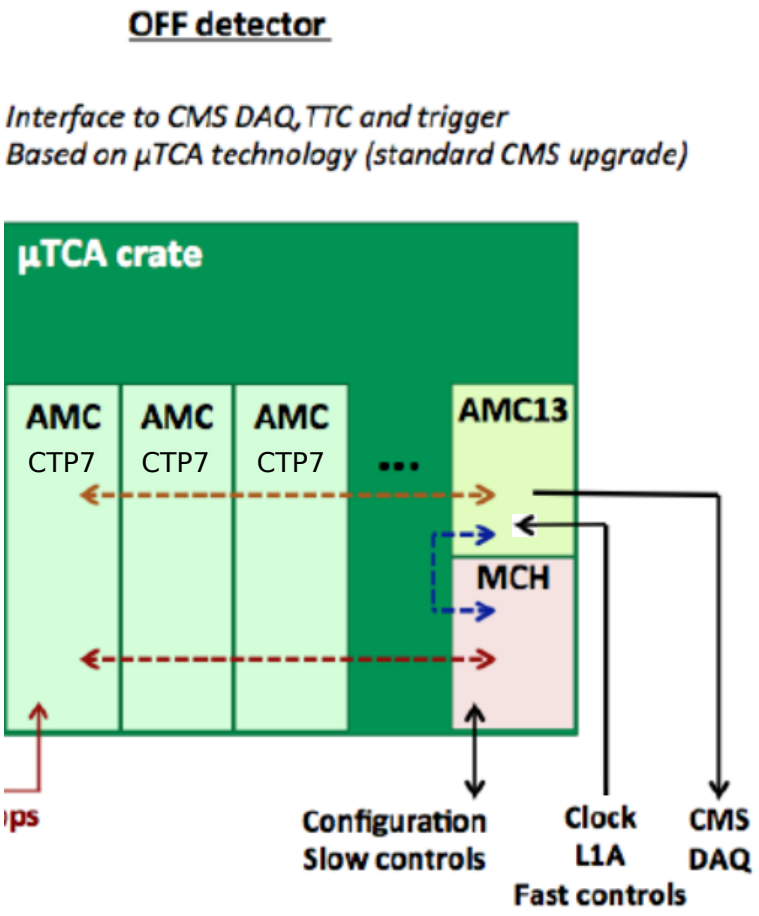

Data format

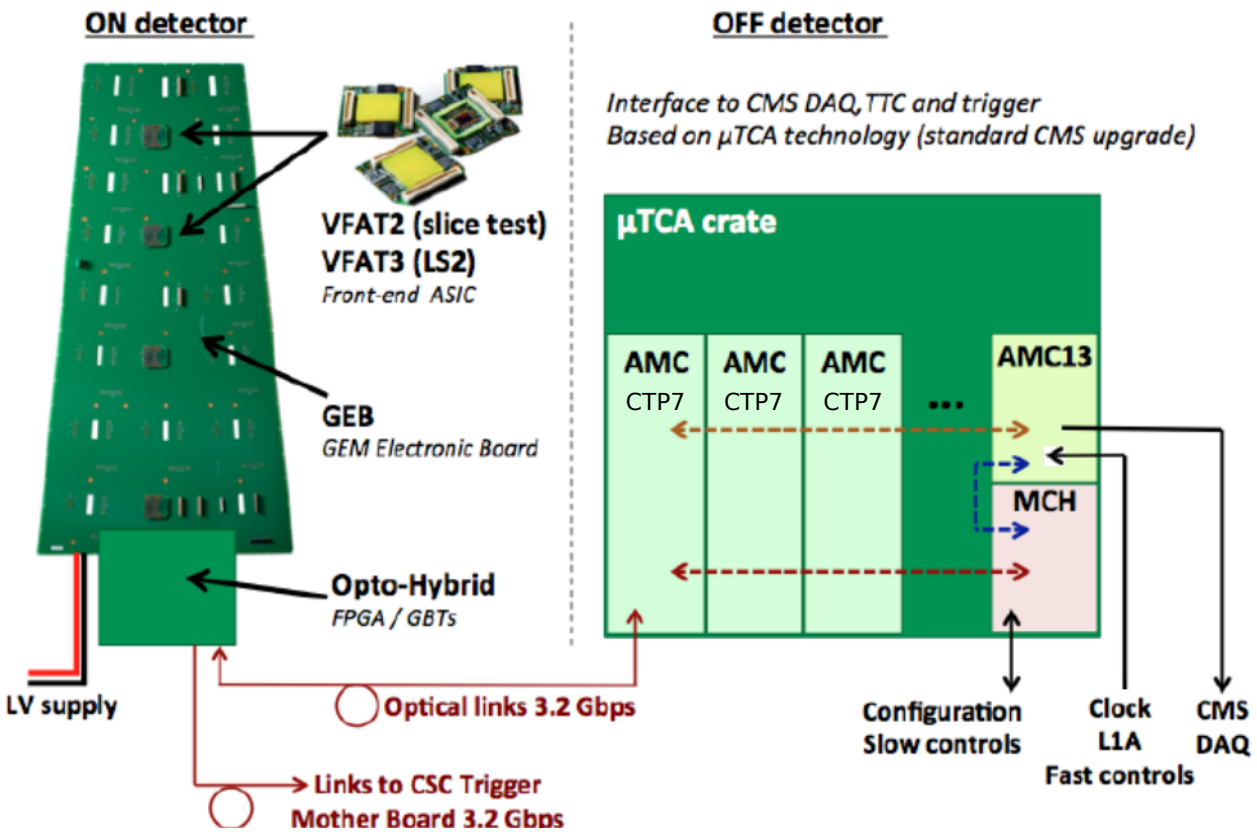

VFAT (Data packet) $\xrightarrow{e-link}$ GBT at OH (8 VFATs x GBT) (Serialize data) $\xrightarrow{opticallink}$ AMC card $\xrightarrow{\mu TCA\ backplane}$ AMC13 card

Firmware: Implementation of common protocols (GBT and IPbus) and set of flags for warnings and errors

XDAQ - Generics

Software platform designed specifically for the development of distributed data acquisition systems.

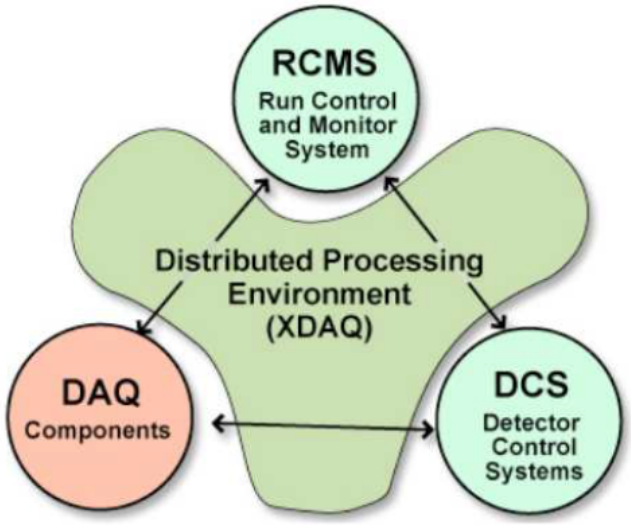

XMAS alarm propagation

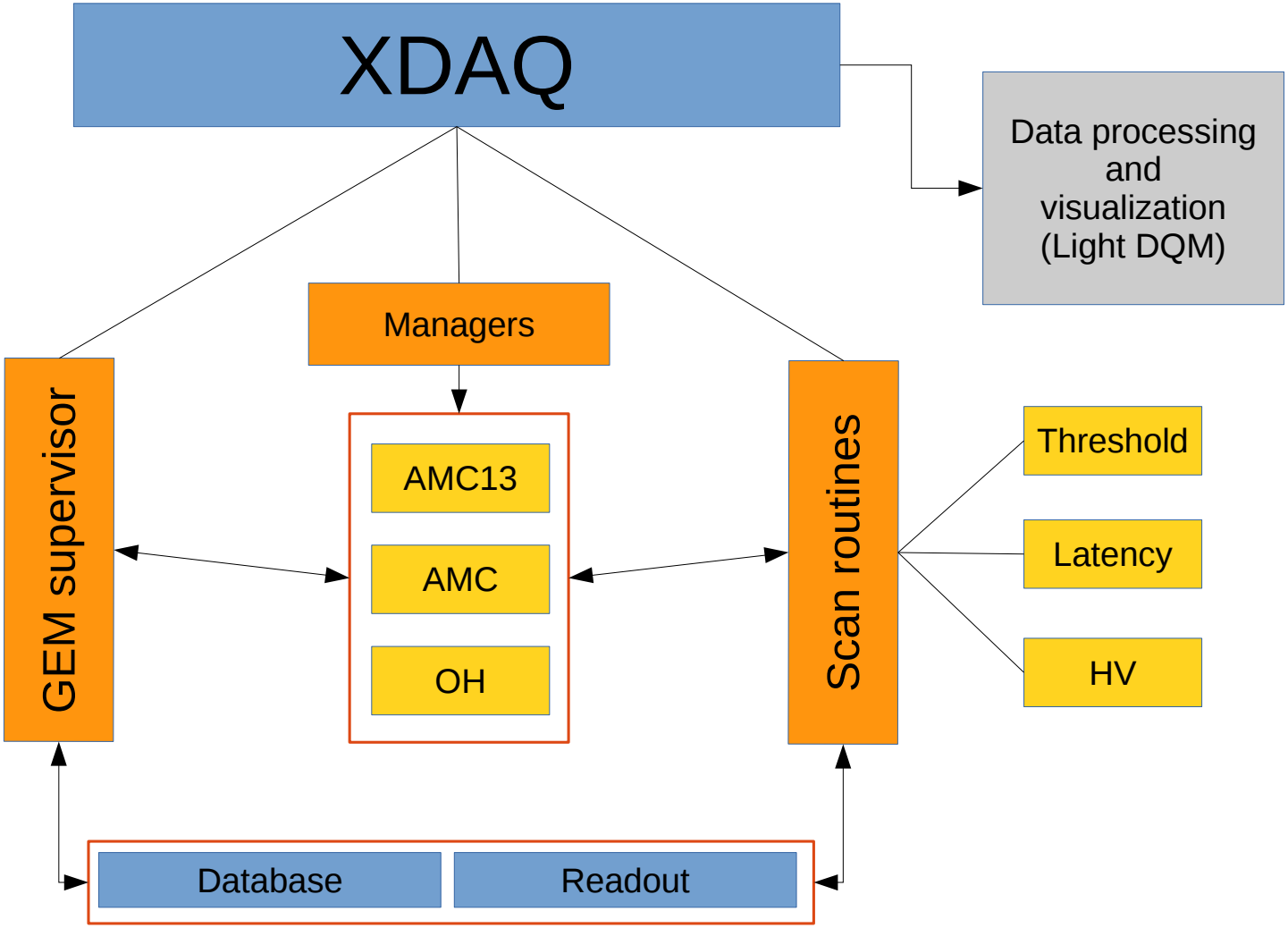
XDAQ
Data processing and visualization (Light DQM)
Managers
GEM supervisor
AMC13
AMC
OH
Scan routines
Threshold
Latency
HV
Database
Readout

GEM online system

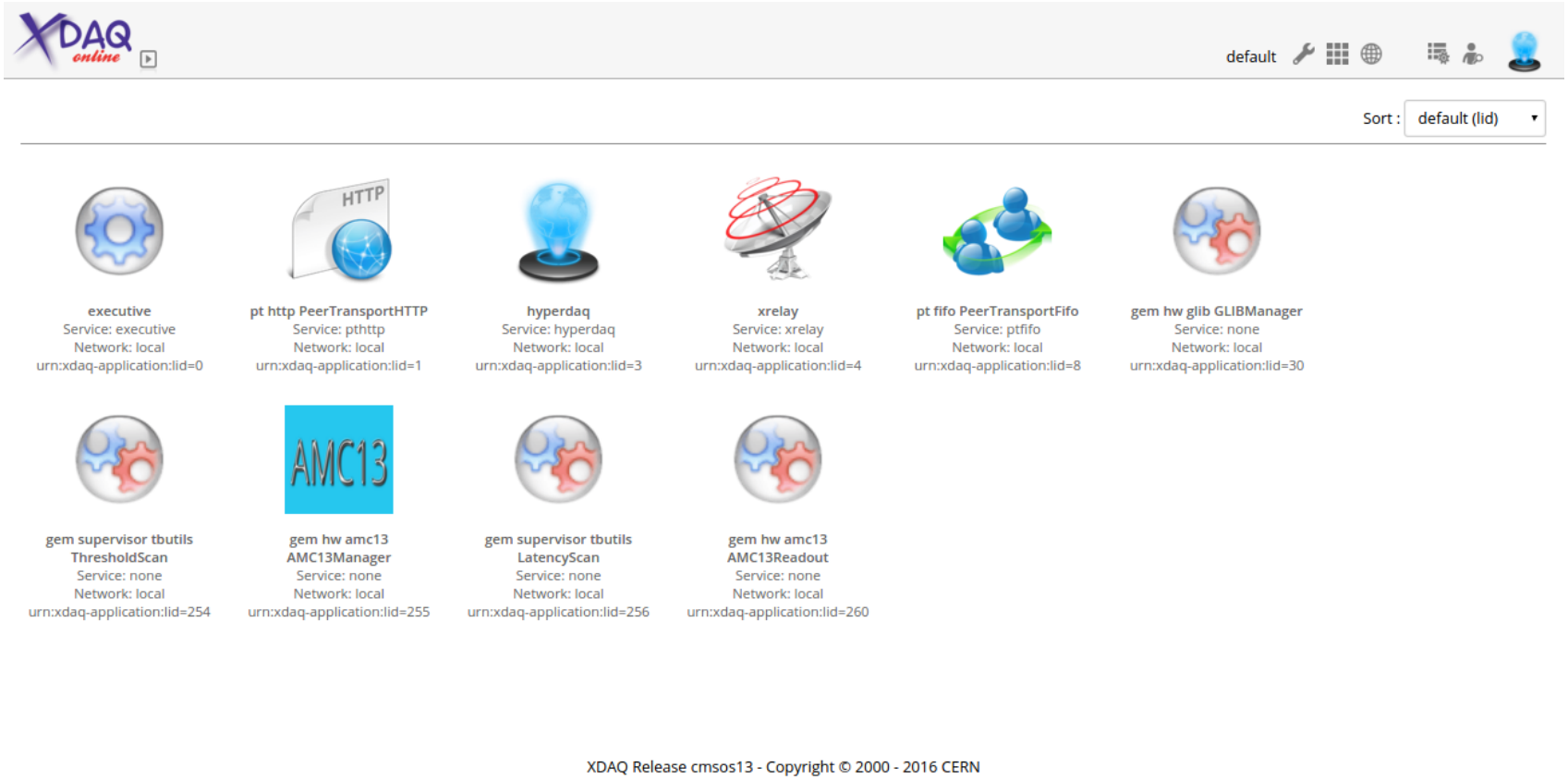

GEM supervisor

- HTML application
- Actions: configure, start, stop, halt, ...
- Just clicking buttons on a web page

Component managers

Managers

- Piece of code to manage each DAQ component
- OH, AMC13, AMC
- Fully configurable from a xml file
- Monitoring component status

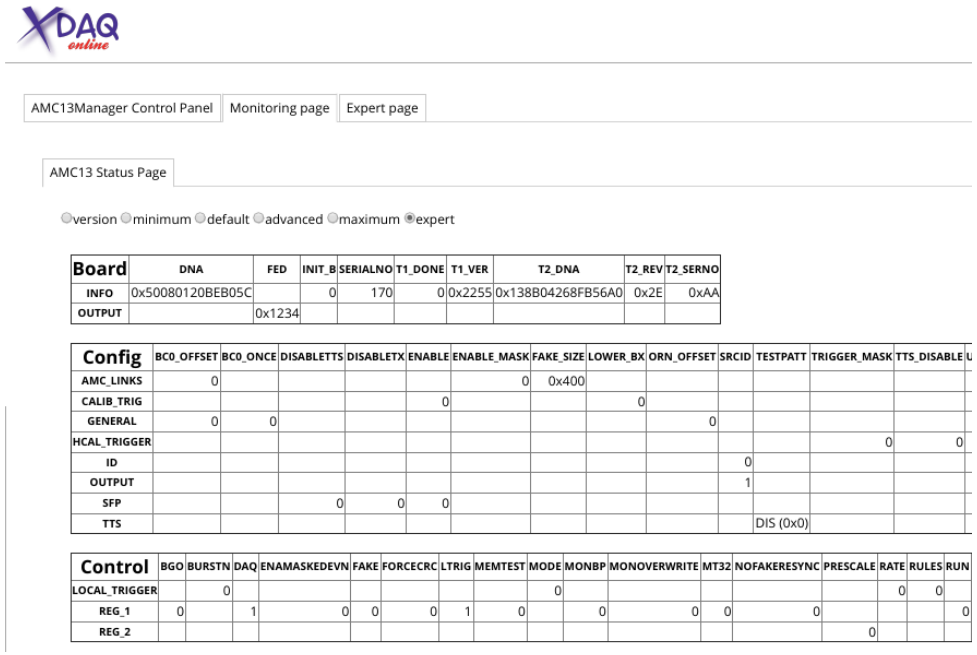

Board	DNA	FED	INIT_B	SERIALNO	T1_DONE	T1_VER	T2_DNA	T2_REV	T2_SERNO
INFO	0x50080120BEB05C		0	170	0	0x2255	0x138B04268FB56A0	0x2E	0xAA
OUTPUT		0x1234							

Config	BC0_OFFSET	BC0_ONCE	DISABLETTS	DISABLETX	ENABLE	ENABLE_MASK	FAKE_SIZE	LOWER_BX	ORN_OFFSET	SRCID	TESTPATT	TRIGGER_MASK	TTS_DISABLE
AMC_LINKS	0					0	0x400						
CALIB_TRIG					0			0					
GENERAL	0	0							0				
HCAL_TRIGGER												0	0
ID										0			
OUTPUT										1			
SFP			0	0	0								
TTS											DIS (0x0)		

Control	BGO	BURSTN	DAQ	ENAMASKEDEVN	FAKE	FORCECRC	LTRIG	MEMTEST	MODE	MONBP	MONOVERWRITE	MT32	NOFAKERESYNC	PRESCALE	RATE	RULES	RUN
LOCAL_TRIGGER		0							0						0	0	
REG_1	0		1	0	0	0	1	0		0	0	0	0				0
REG_2														0			

Scan routines

Calibration scans

- Directly done from AMC13
- Latency scan, Threshold scan, High voltage scan

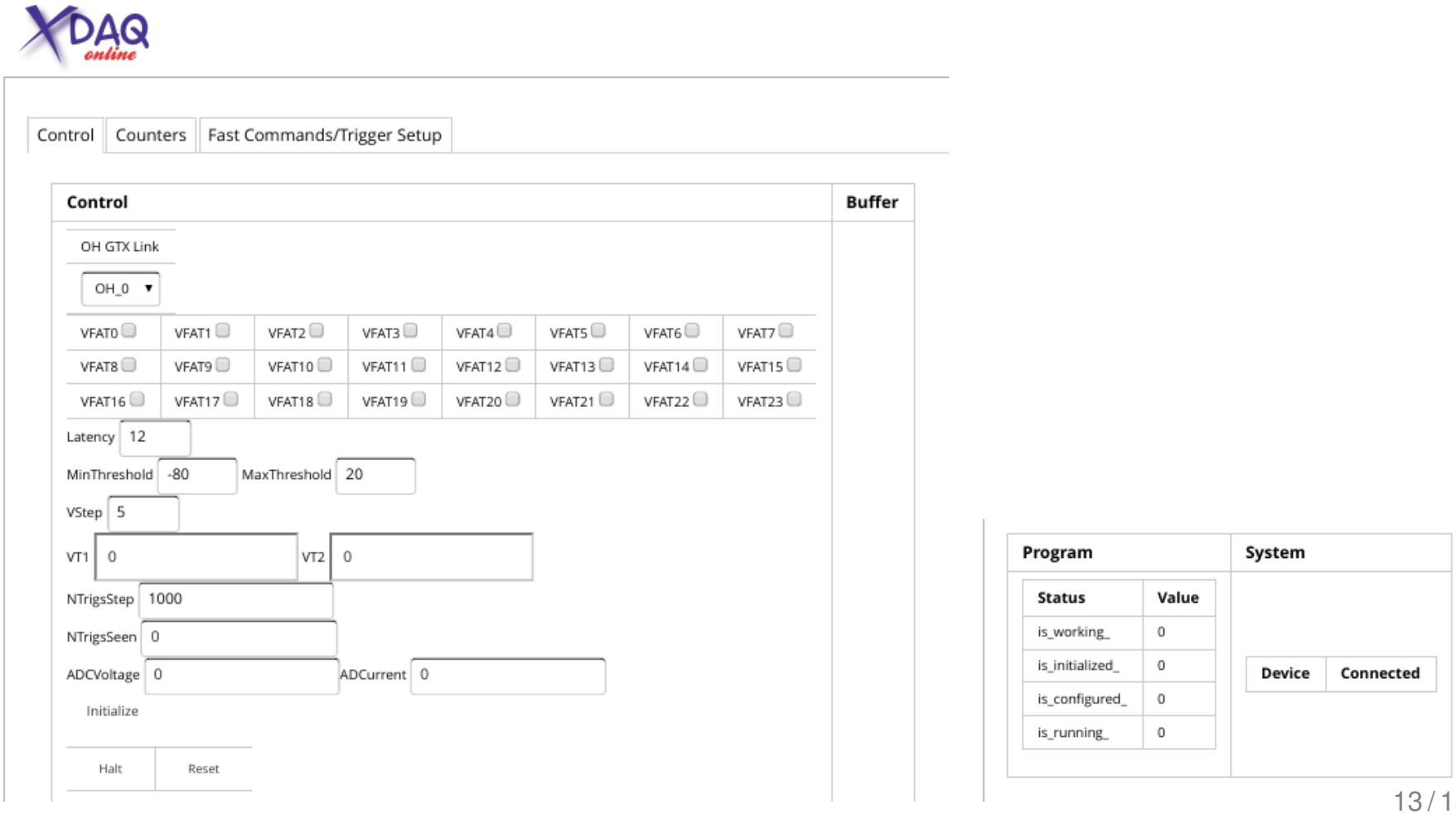

Conclusions

- New GEM system to be installed in CMS during 2019-2020 upgrade
- Several additional tools under development: DQM, python-based CLI, Node.js webdaq, LightDQM web-interface
- Getting ready for slice test (beginning 2017 $\rightarrow$ Installation of 2 to 4 superchambers at CMS)
- Currently testing and doing quality control at CERN (2 locations) and remote locations (Brussels, Rice U., TAMU, Fermilab)

Source of figures

- Colaleo, A. and Safonov, A. and Sharma, A. and Tytgat, M., *CMS Technical Design Report for the Muon Endcap GEM Upgrade*, CERN-LHCC-2015-012, CMS-TDR-013, 2015.
- Merlin, Jeremie Alexandre and Brom, Jean-Marie and Sharma, Archana, *Study of long-term sustained operation of gaseous detectors for the high rate environment in CMS*, CERN-THESIS-2016-041, 2016.
- Vai, Ilaria, *Test beam and irradiation test results of Triple-GEM detector prototypes for the upgrade of the Muon System of the CMS experiment*, CMS-CR-2015-116, 2015.

BACKUP

CMS L1 trigger rate with GE1/1

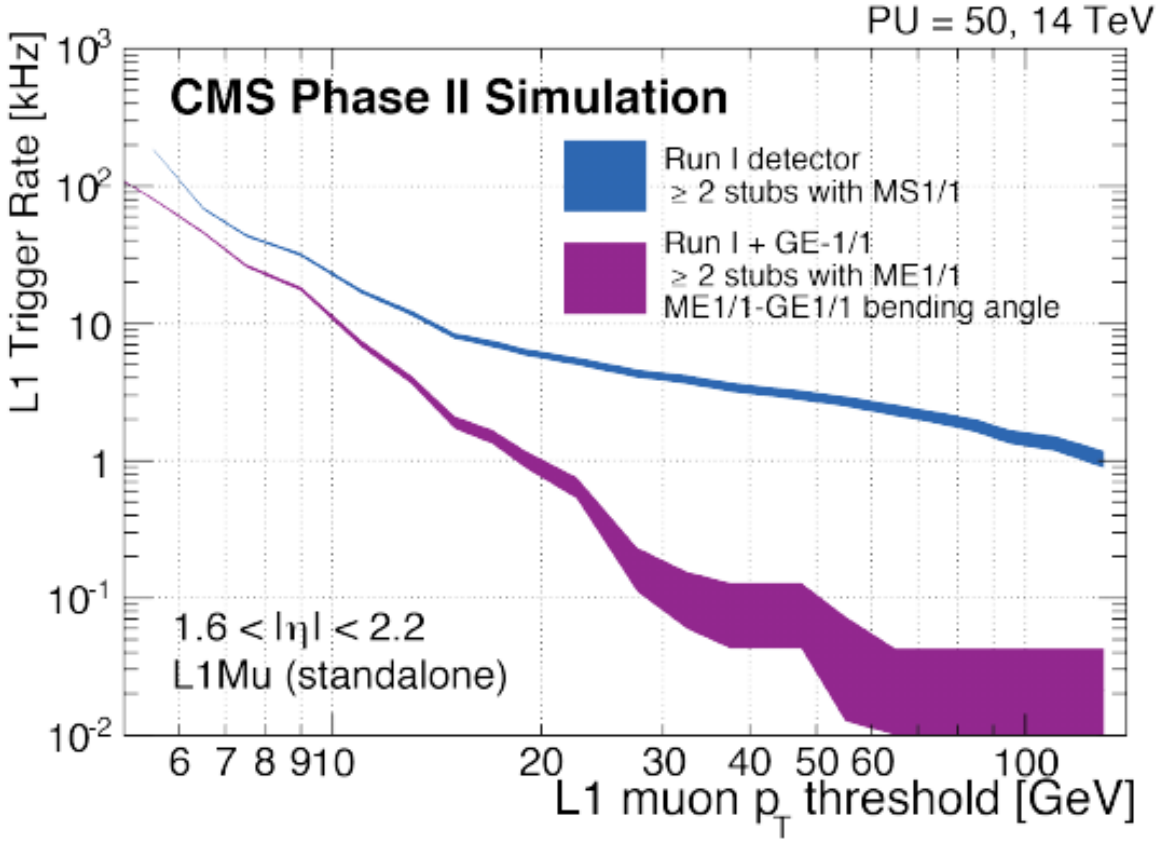

Figure 1.2: Level 1 muon trigger rates before and after the GE1/1 upgrade at a luminosity of 2×10^{34} cm^{-2} s^{-1}, for constant efficiency of 94%. MS1/1 denotes the first endcap muon station Level 1 trigger in both cases, i.e. with CSC-only or with the combination CSC and GEM trigger information. With the addition of GE1/1, the bending angle between the two stations can be used and the trigger rate is greatly reduced.

Performance

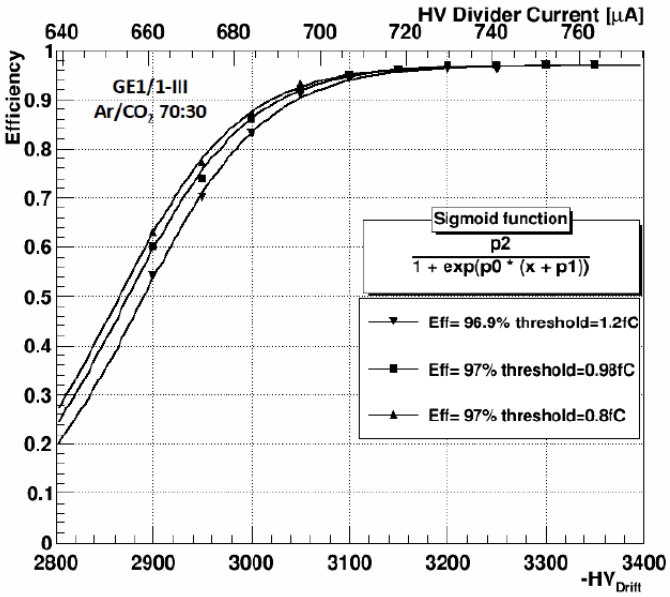

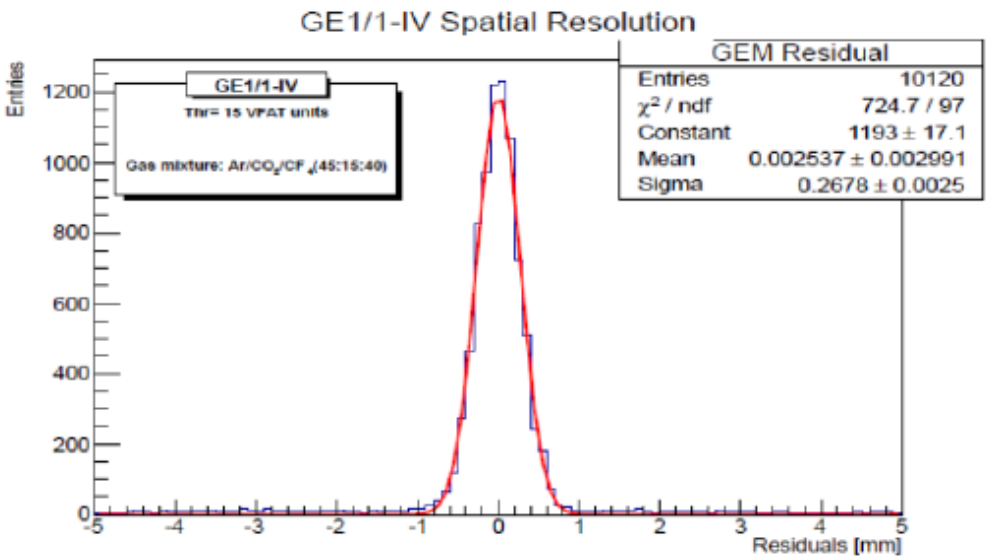

Gas Electron Multiplier detector at CMS experiment

Triple-GEM

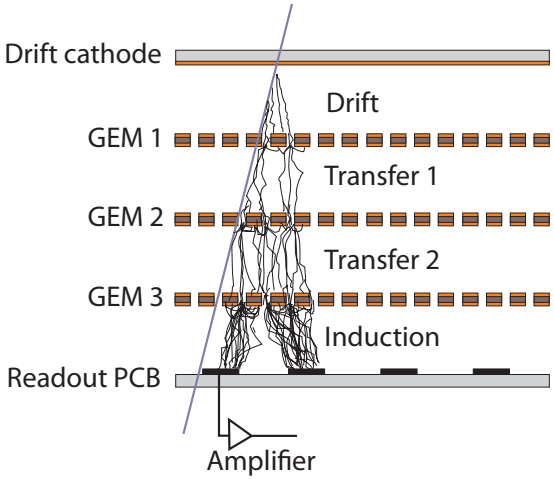

GE1/1 Gap Sizes	Typical Potentials	Typical Voltages	Typical El. Fields [kV/cm]
	3200 V		
3 mm		770 V	2.6
	2430 V	380 V	64.0
1 mm	2050 V	300 V	3.0
	1750 V	370 V	62.0
2 mm	1380 V	600 V	3.0
	780 V	350 V	60.0
1 mm	430 V	430 V	4.3
	0 V		

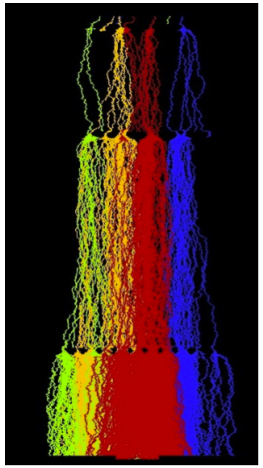

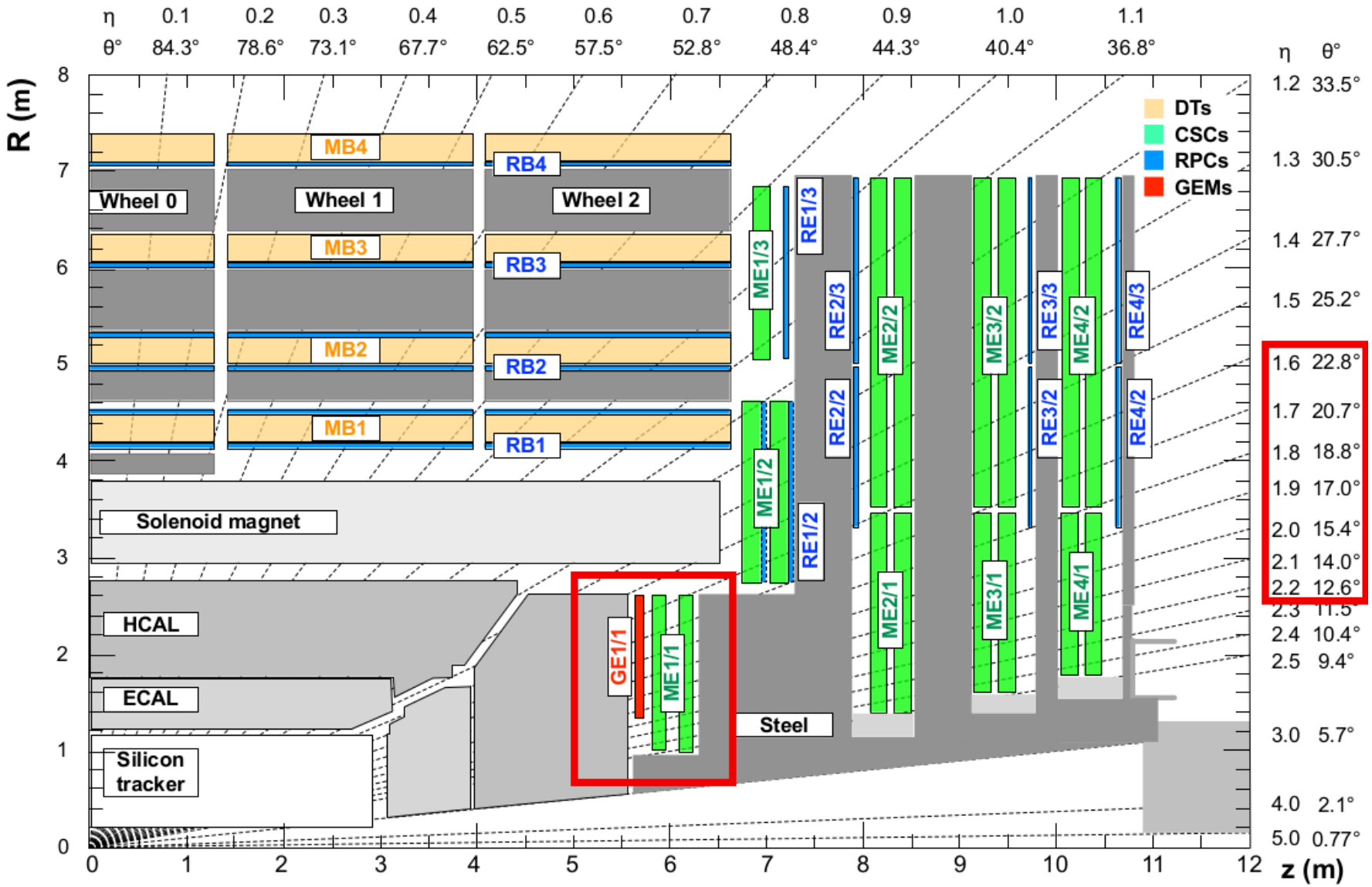
η
θ°
0.1 84.3°
0.2 78.6°
0.3 73.1°
0.4 67.7°
0.5 62.5°
0.6 57.5°
0.7 52.8°
0.8 48.4°
0.9 44.3°
1.0 40.4°
1.1 36.8°
R (m)
z (m)
DTs
CSCs
RPCs
GEMs
MB4
MB3
MB2
MB1
RB4
RB3
RB2
RB1
Wheel 0
Wheel 1
Wheel 2
Solenoid magnet
HCAL
ECAL
Silicon tracker
Steel
GE1/1
ME1/1
ME1/2
ME1/3
RE1/2
RE1/3
RE2/2
RE2/3
ME2/1
ME2/2
ME3/1
ME3/2
RE3/2
RE3/3
ME4/1
ME4/2
RE4/2
RE4/3
η θ°
1.2 33.5°
1.3 30.5°
1.4 27.7°
1.5 25.2°
1.6 22.8°
1.7 20.7°
1.8 18.8°
1.9 17.0°
2.0 15.4°
2.1 14.0°
2.2 12.6°
2.3 11.5°
2.4 10.4°
2.5 9.4°
3.0 5.7°
4.0 2.1°
5.0 0.77°

GE1/1 development and upgrade schedule

GE1/1-I (2010) | GE1/1-II (2011) | GE1/1-III (2012) | GE1/1-IV (2013) | GE1/1-V-S (2014) | GE1/1-VI-L (2015)

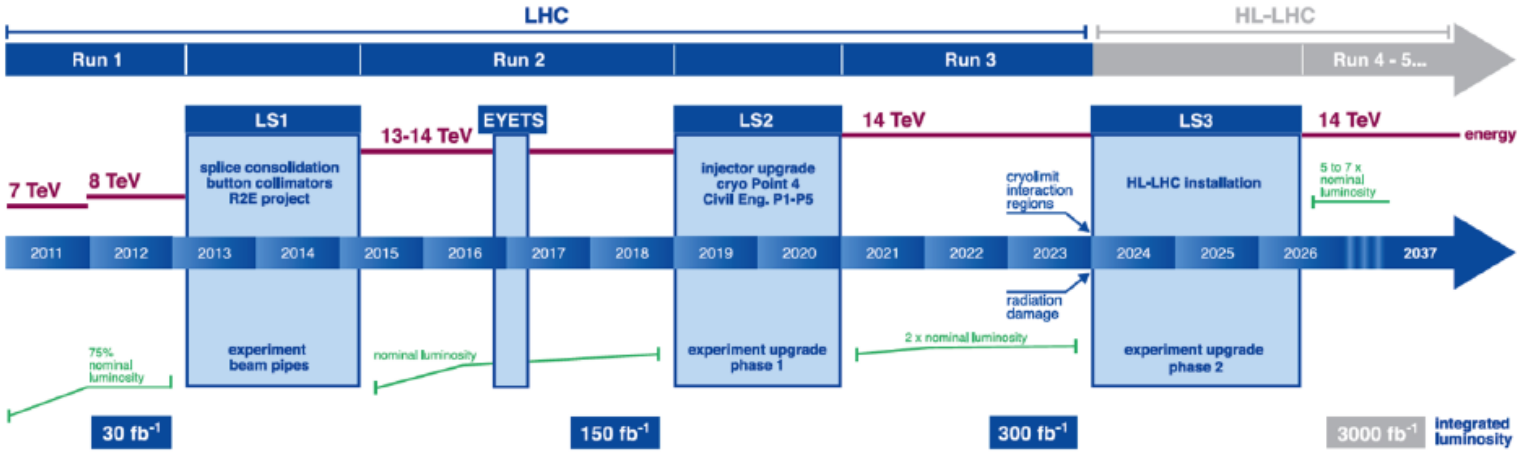

GEM Endcap: GE1/1

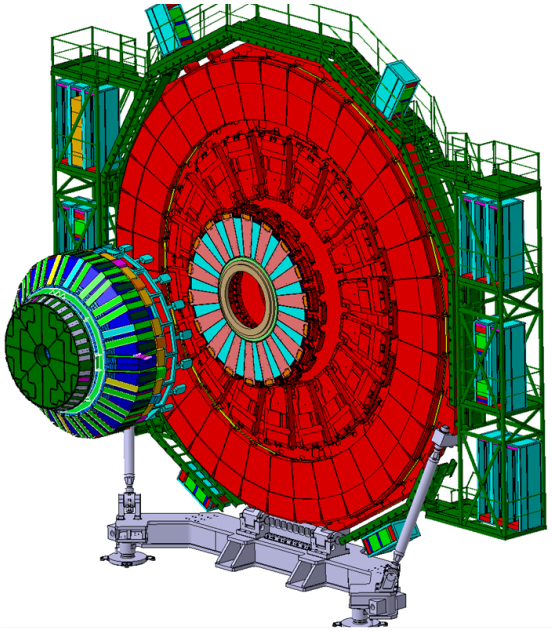

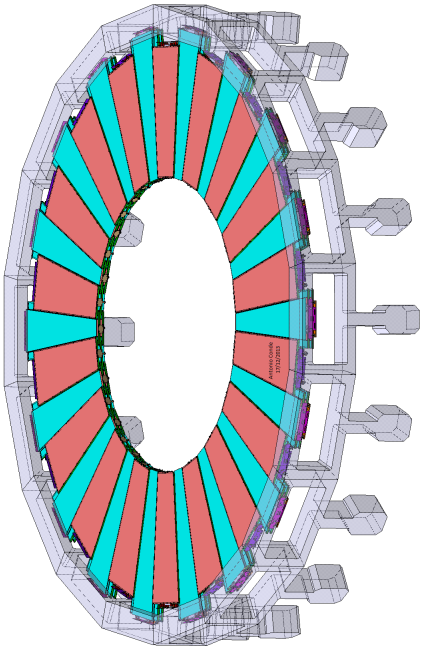

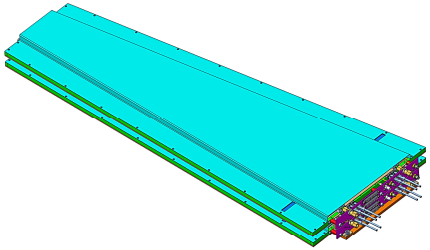

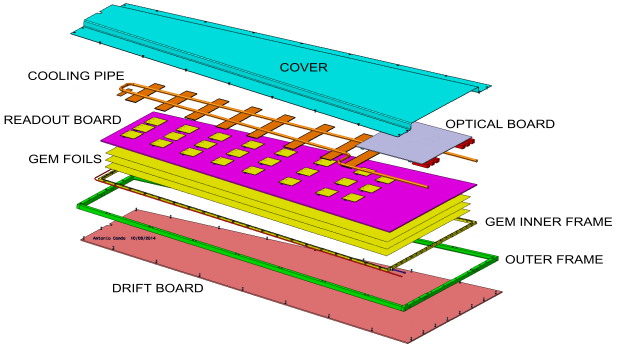

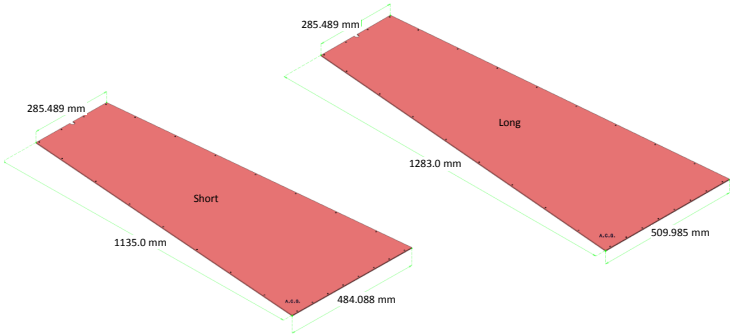

GEM Electronic Board (GEB)

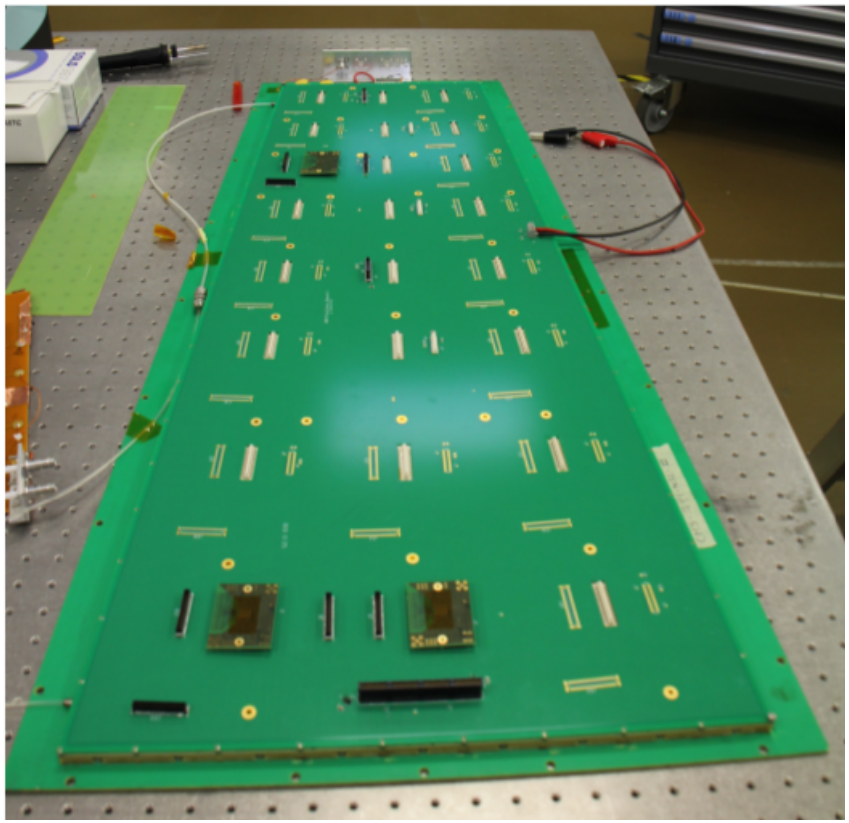

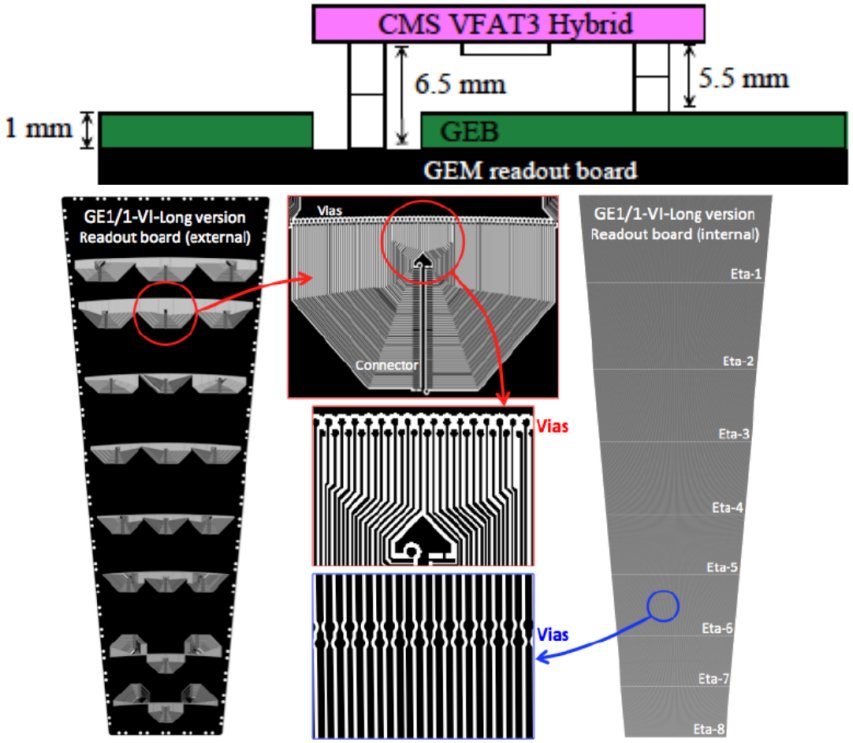

Left: External face of the readout board of the GE1/1 detectors. Right: Internal face of the readout board with the readout strips.

Light DQM

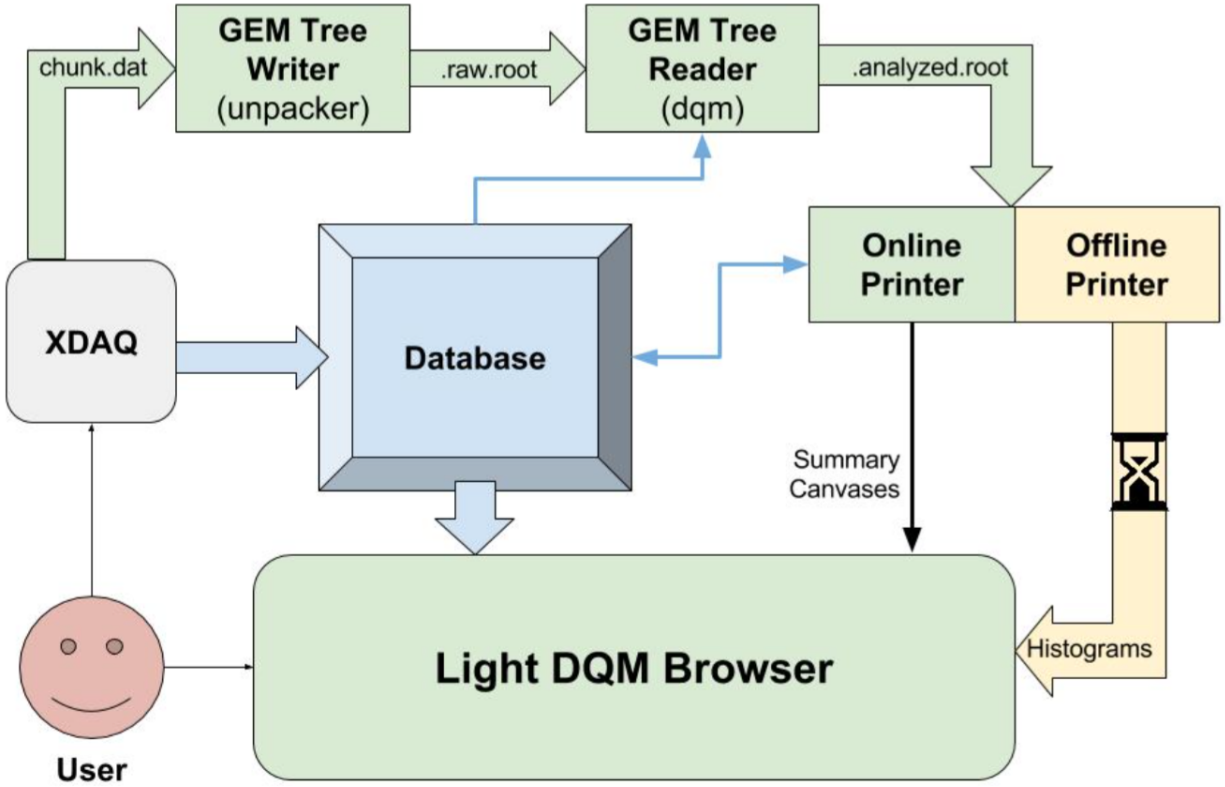

FIGURE 1: LIGHT DQM SYSTEM OVERVIEW

Thanks to Robert King for the diagram.