Instability Diagnostics

T. Levens (BE-BI)

T. Lefevre, M. Gasior, & many others (BE-BI)

A. Butterworth, W. Hofle, G. Kotzian, J. Molendijk,
M. Ojeda Sandonis, D. Valuch (BE-RF)

T. Wlostowski, F. Vaga, FESA team (BE-CO)

6th Evian Workshop

Motivation

LHC run 1 saw transverse instabilities in physics fills with 50ns bunch spacing. Impacted LHC performance and was difficult to diagnose & cure. Was expected to be worse with 25ns in 2015…

Led to review on "*Functional Requirements on Instability Diagnostics after LS1*" (15th March 2013):

- Wish of ABP & OP… "bunch-by-bunch everything!"

Some requirements identified, including:

- Trigger system for synchronisation of acquisitions between BI and RF.
- Bunch-by-bunch observation of tune, position and intra-bunch motion.
- Need for data storage, display and analysis tools…

Outline

Since LS1 some key developments:

LHC Instability Trigger Network (BE-CO)

- Distributing triggers between BI & RF systems

Development of BI instruments:

- Head-Tail Monitor
- Trigger from BBQ
- Multi-Band Instability Monitor

RF "Observation Box"

- Allows large amounts of bunch-by-bunch data to be captured from ADT and RF longitudinal systems

LHC Instability Trigger Network (BE-CO)

White Rabbit deterministic Ethernet network connecting RF & BI instruments.

Allows low-latency distribution of triggers from one instrument to another. Each trigger received at an input is timestamped and distributed over the network.

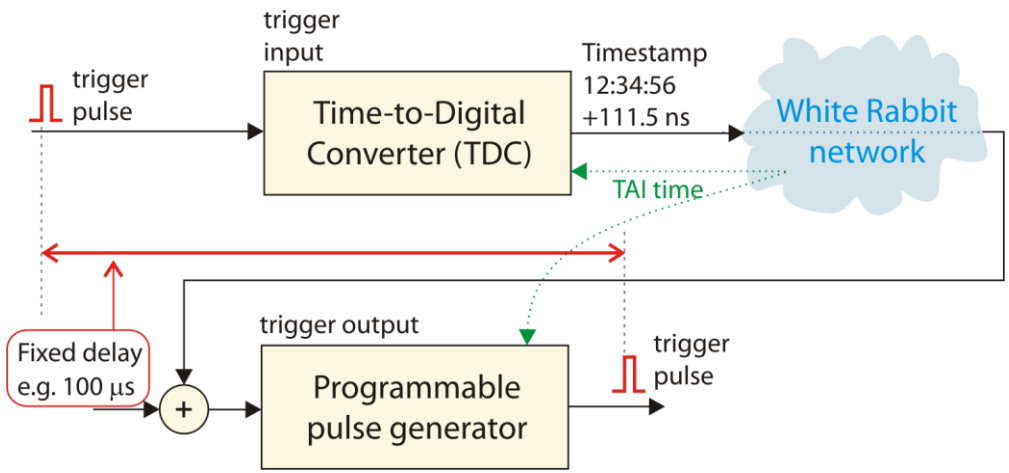

Due to the synchronism of the nodes of the White Rabbit network, each output can subscribe to reproduce triggers from an input with a fixed delay.

Minimum achievable latency is ~300µs for the LIST network.

For more info, see Tomasz' presentation at ICALEPCS 2015 (WEC3O01)

LIST network status

Currently connected:

- BBQ Trigger (4x in)
- Head-Tail (2x out)
- ADT Observation Box (4x out)
- BST/GMT re-distribution (4x out)

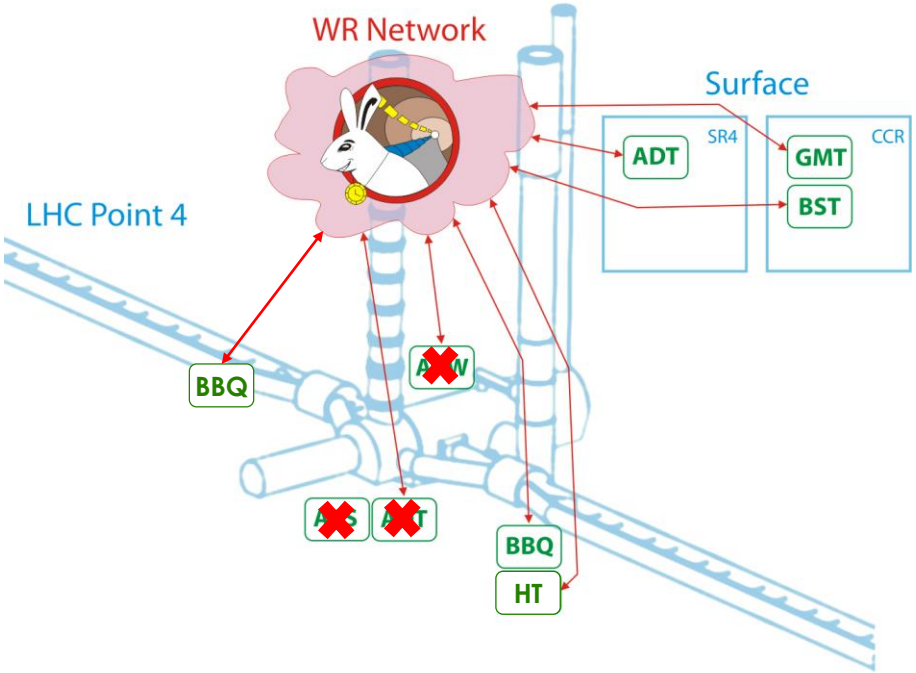

HW installed as planned during LS1, small delay with FESA, but network running reliably since TS1. Logging available since TS2.

Display of routing status and configuration of inputs/outputs via an Inspector panel.

System is expandable – other systems can be connected as needed

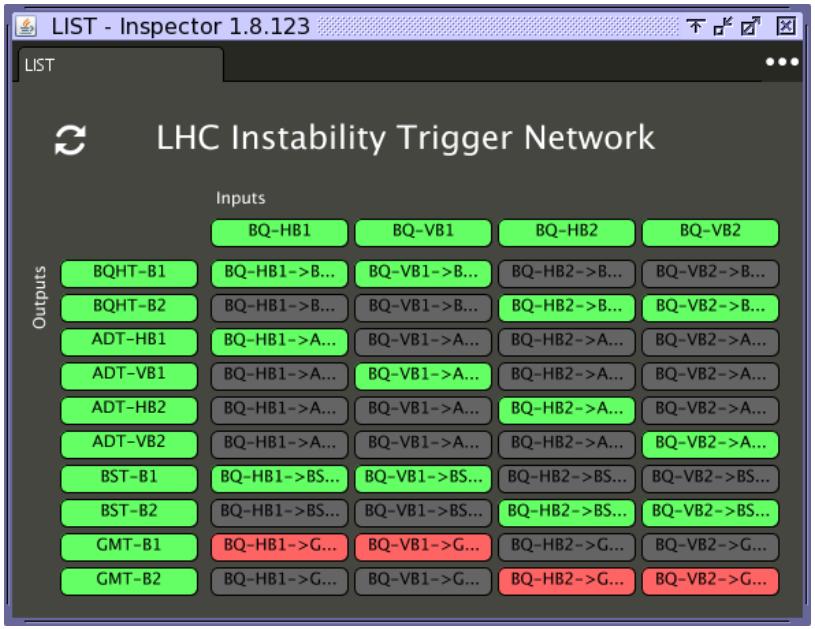

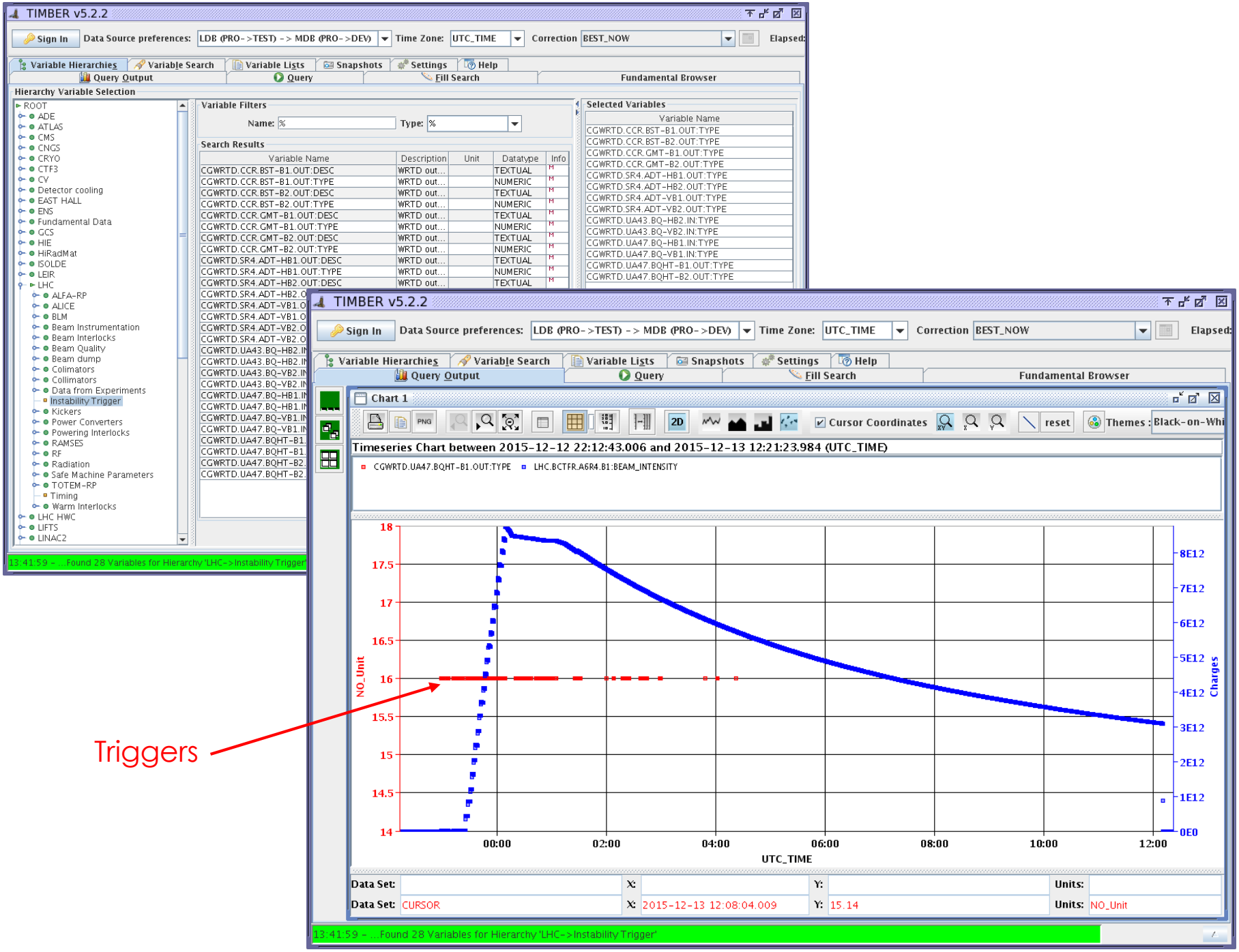
TIMBER v5.2.2
Sign In
Data Source preferences: LDB (PRO->TEST) -> MDB (PRO->DEV)
Time Zone: UTC_TIME
Correction BEST_NOW
Elapsed:
Variable Hierarchies
Variable Search
Variable Lists
Snapshots
Settings
Help
Query Output
Query
Fill Search
Fundamental Browser
Hierarchy Variable Selection
ROOT
ADE
ATLAS
CMS
CNGS
CRYO
CTF3
CV
Detector cooling
EAST HALL
ENS
Fundamental Data
GCS
HIE
HiRadMat
ISOLDE
LEIR
LHC
ALFA-RP
ALICE
BLM
Beam Instrumentation
Beam Interlocks
Beam Quality
Beam dump
Colimators
Collimators
Data from Experiments
Instability Trigger
Kickers
Power Converters
Powering Interlocks
RAMSES
RF
Radiation
Safe Machine Parameters
TOTEM-RP
Timing
Warm Interlocks
LHC HWC
LIFTS
LINAC2
Variable Filters
Name: %
Type: %
Search Results
Variable Name
Description
Unit
Datatype
Info
CGWRTD.CCR.BST-B1.OUT:DESC
CGWRTD.CCR.BST-B1.OUT:TYPE
CGWRTD.CCR.BST-B2.OUT:DESC
CGWRTD.CCR.BST-B2.OUT:TYPE
CGWRTD.CCR.GMT-B1.OUT:DESC
CGWRTD.CCR.GMT-B1.OUT:TYPE
CGWRTD.CCR.GMT-B2.OUT:DESC
CGWRTD.CCR.GMT-B2.OUT:TYPE
CGWRTD.SR4.ADT-HB1.OUT:DESC
CGWRTD.SR4.ADT-HB1.OUT:TYPE
CGWRTD.SR4.ADT-HB2.OUT:DESC
Selected Variables
CGWRTD.CCR.BST-B1.OUT:TYPE
CGWRTD.CCR.BST-B2.OUT:TYPE
CGWRTD.CCR.GMT-B1.OUT:TYPE
CGWRTD.CCR.GMT-B2.OUT:TYPE
CGWRTD.SR4.ADT-HB1.OUT:TYPE
CGWRTD.SR4.ADT-HB2.OUT:TYPE
CGWRTD.SR4.ADT-VB1.OUT:TYPE
CGWRTD.SR4.ADT-VB2.OUT:TYPE
CGWRTD.UA43.BQ-HB2.IN:TYPE
CGWRTD.UA43.BQ-VB2.IN:TYPE
CGWRTD.UA47.BQ-HB1.IN:TYPE
CGWRTD.UA47.BQ-VB1.IN:TYPE
CGWRTD.UA47.BQHT-B1.OUT:TYPE
CGWRTD.UA47.BQHT-B2.OUT:TYPE
13:41:59 - ...Found 28 Variables for Hierarchy 'LHC->Instability Trigger'
Chart 1
Cursor Coordinates
reset
Themes : Black-on-Whi
Timeseries Chart between 2015-12-12 22:12:43.006 and 2015-12-13 12:21:23.984 (UTC_TIME)
CGWRTD.UA47.BQHT-B1.OUT:TYPE
LHC.BCTFR.A6R4.B1:BEAM_INTENSITY
NO_Unit
Charges
UTC_TIME
Data Set:
Data Set: CURSOR
X: 2015-12-13 12:08:04.009
Y: 15.14
Units: NO_Unit
Triggers

Head-Tail Monitor

Acquisition of BPM sum/delta signals with fast oscilloscope (10GSPS)

"Features"

- Limited resolution
- Short acquisition length
- Slow readout speed
- Large file size

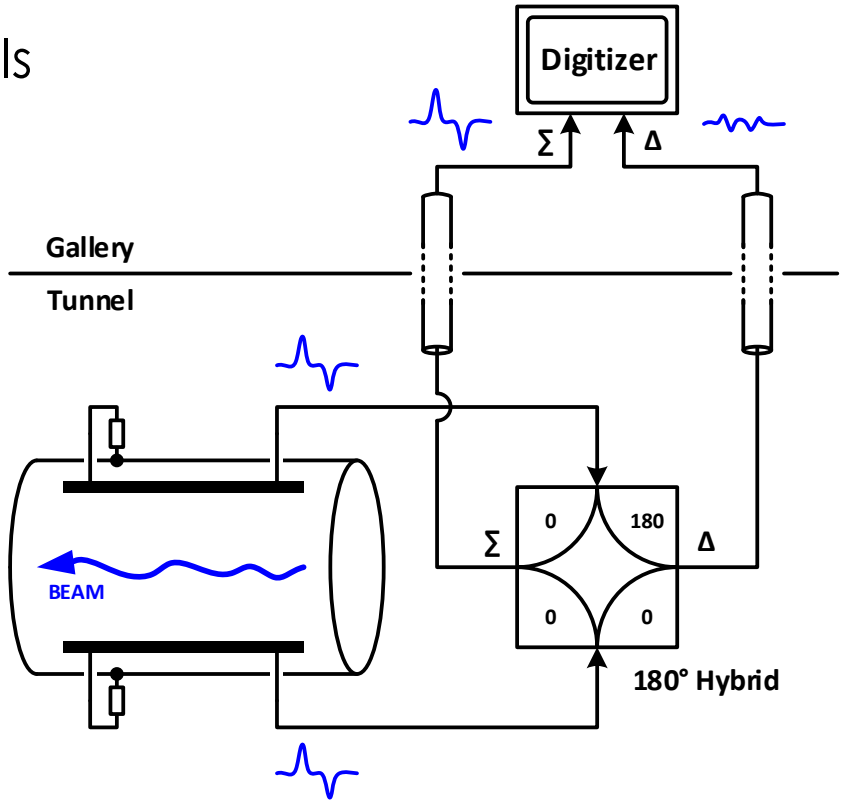

Since run 1:

- No major hardware changes
- Software rewritten:
  - New FESA3 class optimised for instability measurements
    - Can now acquire both H/V planes simultaneously
  - Data saved directly to HDF5 files on NFS
  - New GUIs for data viewing and post-processing

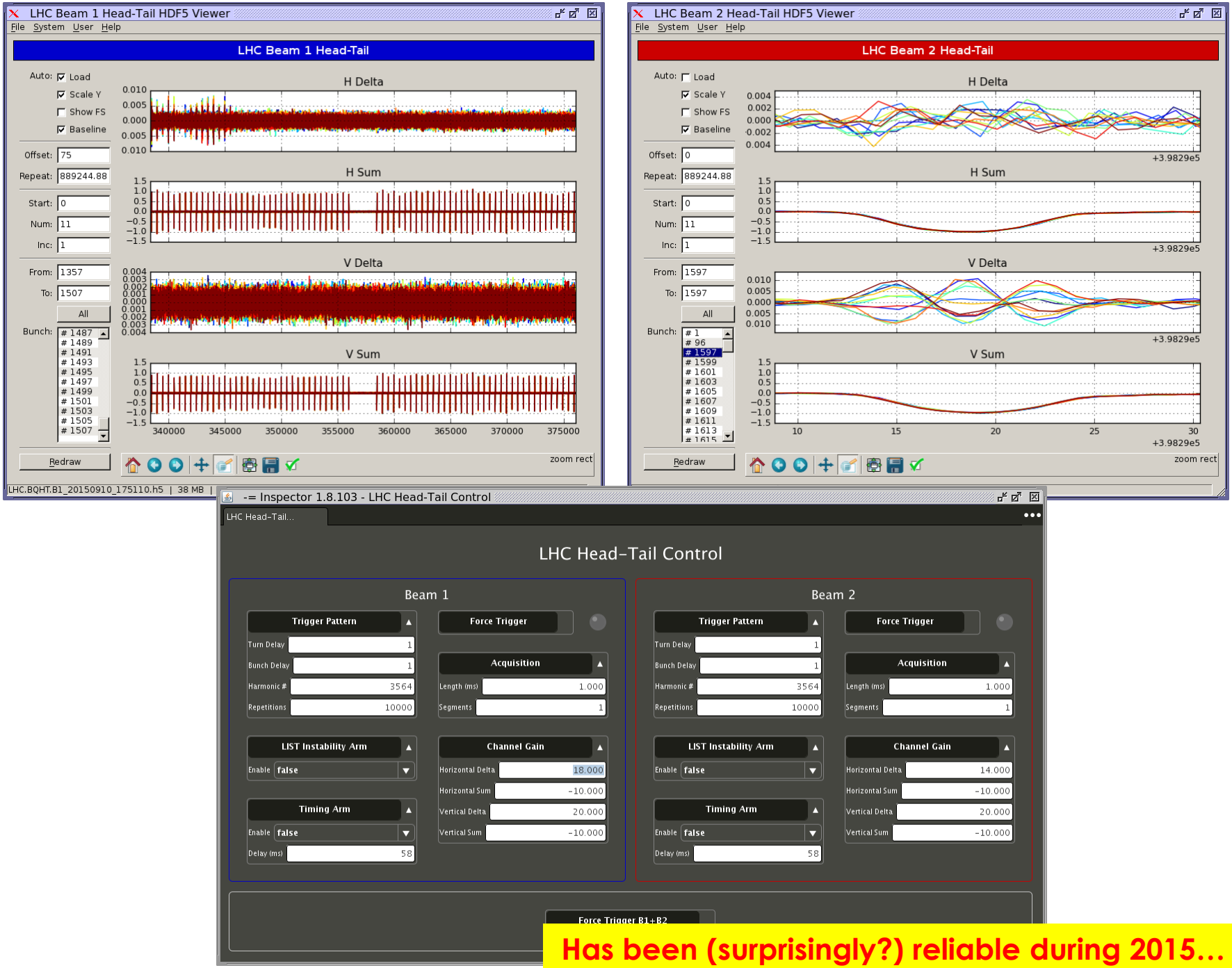

Has been (surprisingly?) reliable during 2015…

MD measurements saw modes 0...4

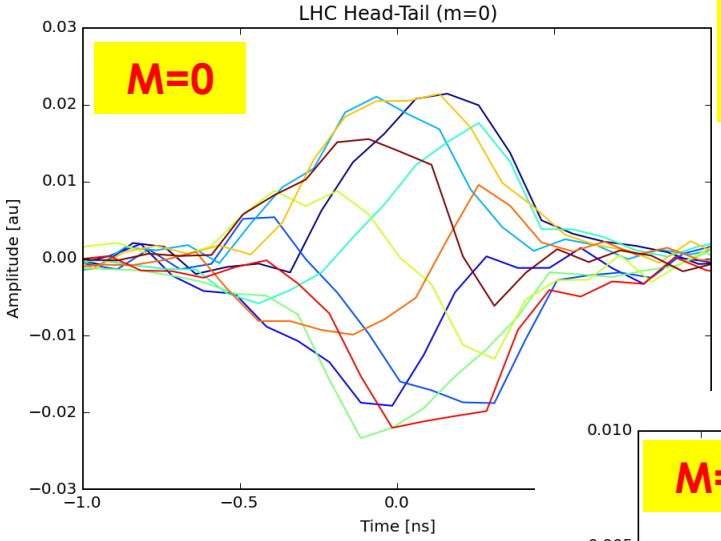

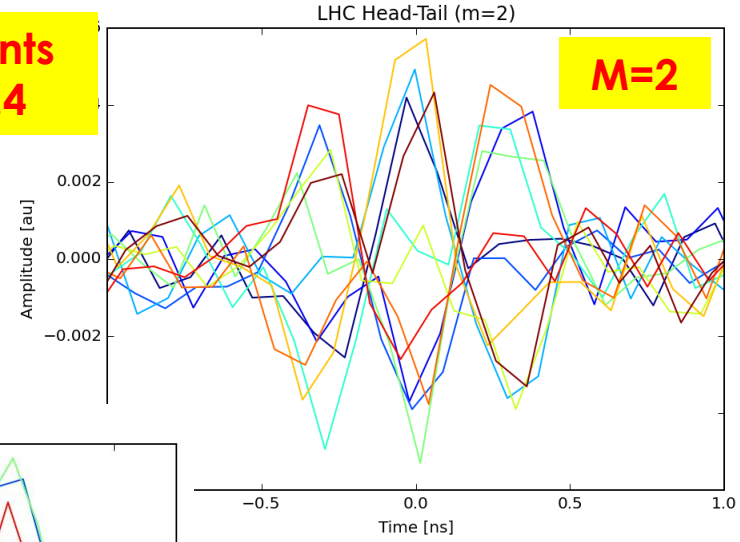

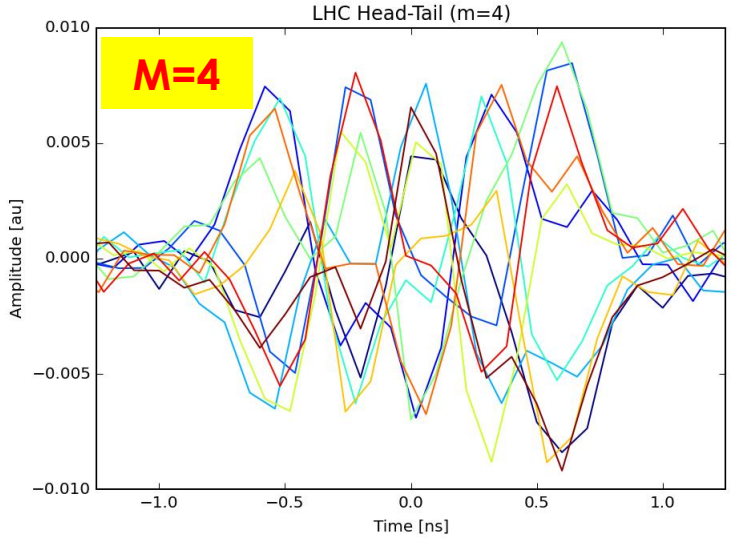

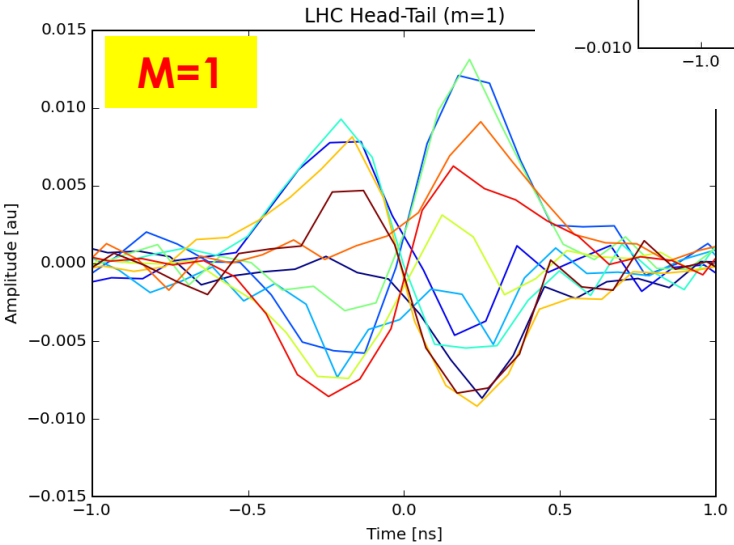

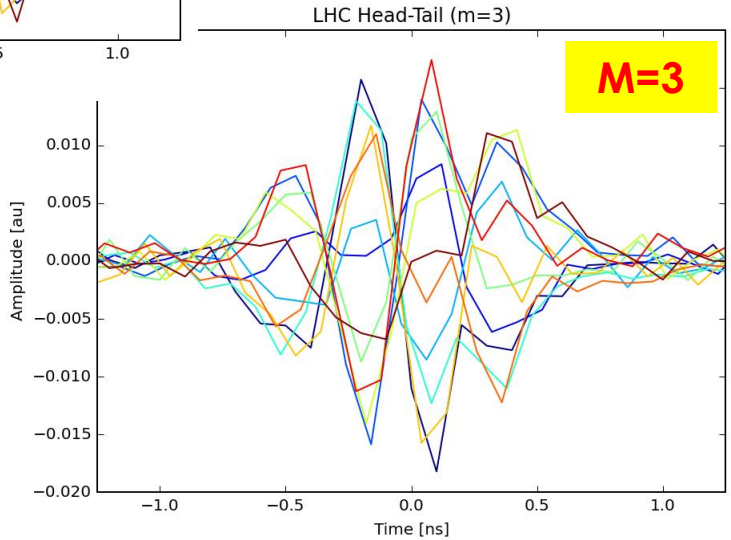

BBQ Trigger

New development in 2015 – instability trigger from BBQ.

Growth in BBQ amplitude indicative of an instability, so trigger looks at growth in time domain data and generates a trigger.

Algorithm works reasonably and with the LIST network has allowed us to capture real instabilities with the Head-Tail monitor.

But it is very sensitive:

- Triggers on injection transients
- Triggers during abort gap & injection cleaning excitation

To be improved for 2016

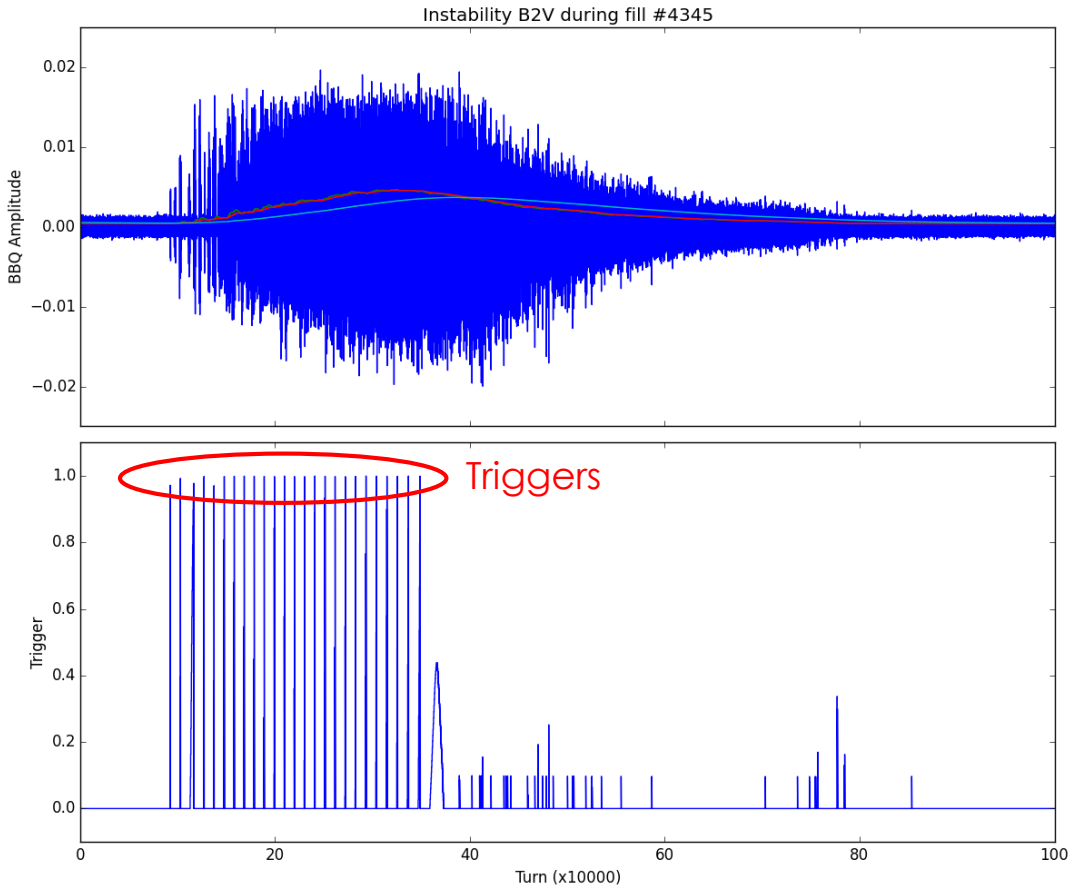

Multi-Band Instability Monitor (MIM)

On-going development in BI as an alternative to Head-Tail digitisation.

Looks at different frequency components of BPM signal using RF filter bank.

From the relative power in the bands can determine mode number.

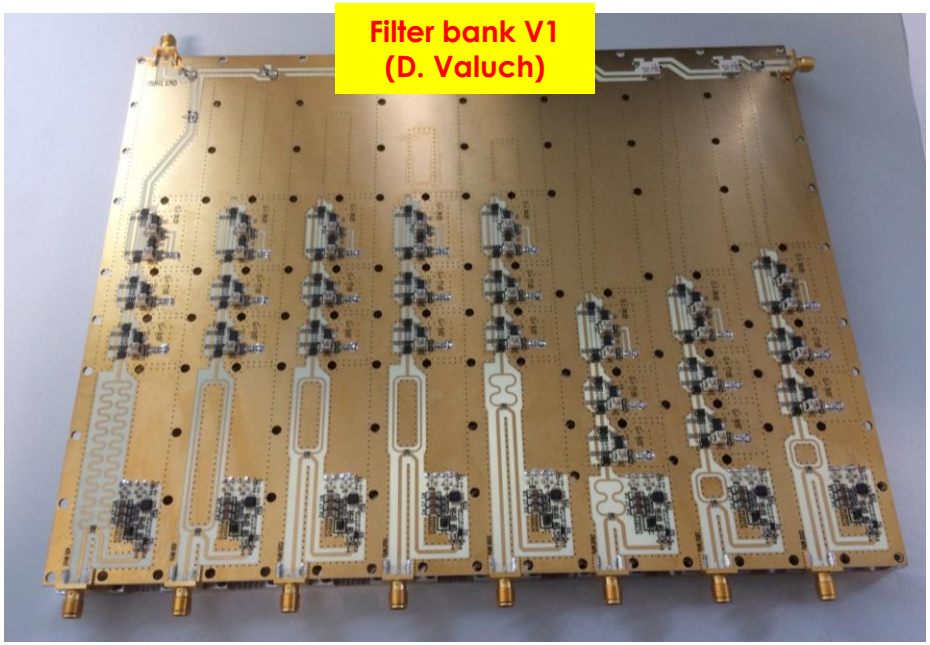

Initial version:

- 8 bands
  - 400MHz…3.2GHz
- Diode detectors & 24-bit ADCs (similar to BBQ)
  - Sensitive but not bunch-by-bunch

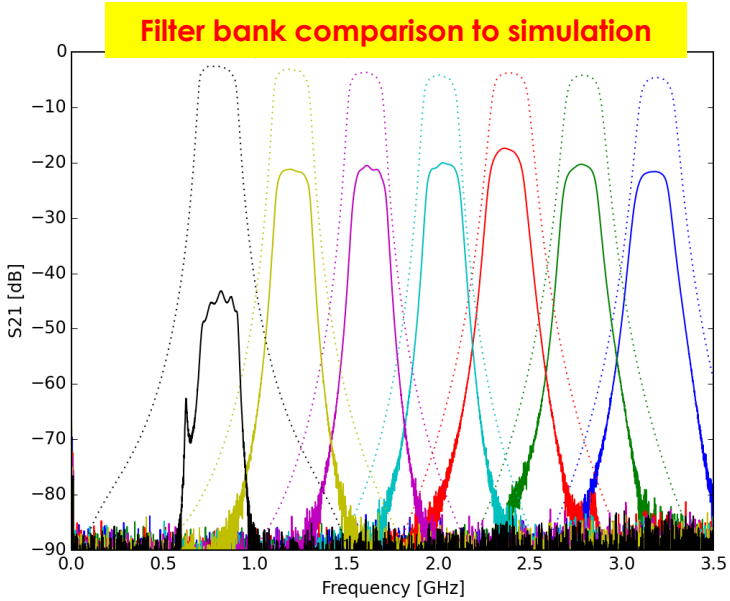

Multi-Band Instability Monitor (MIM)

Prototype MIM hardware has been installed during TS3.

For initial tests have only installed a single unit, switchable between delta signals to measure beam/plane of interest.

Sharing PUs with Head-Tail means good measurements only possible with nominal bunches.

Some initial tests with ions, but first real measurements with protons expected after the YETS.

Plan on a full installation for all beams/planes once performance is verified.

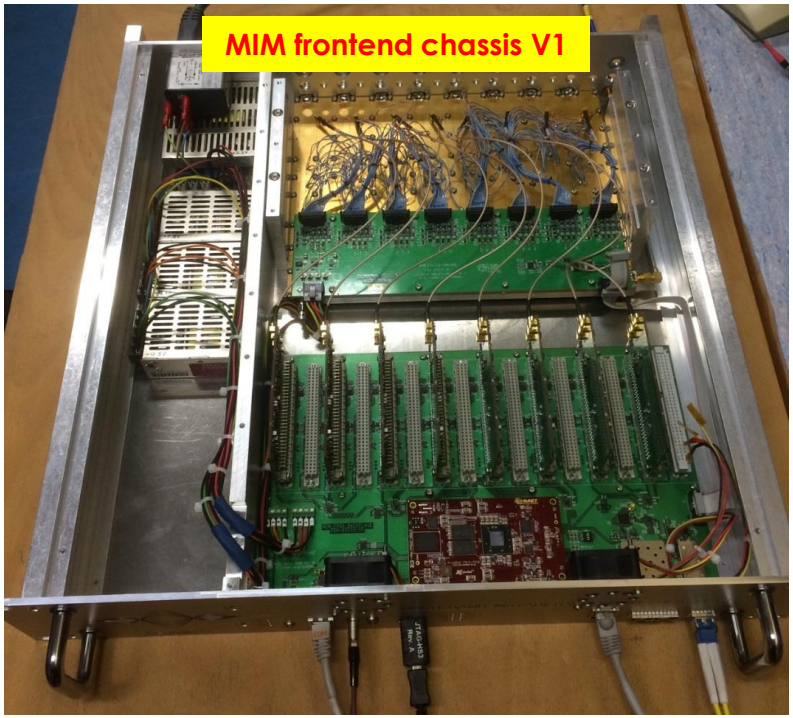

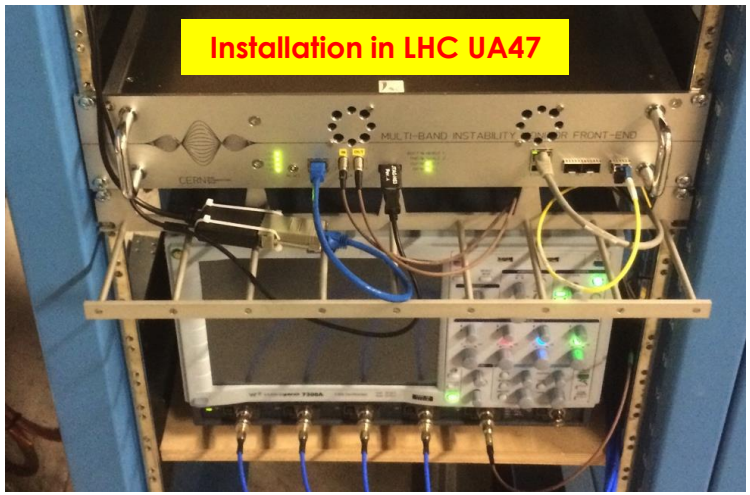

Observation Box

During run 1, no way to extract large amounts of bunch-by-bunch data from ADT – limited to 73 turns for all bunches.

"Observation Box" developed to record data from existing gigabit serial links between Beam Position and DSPU modules:

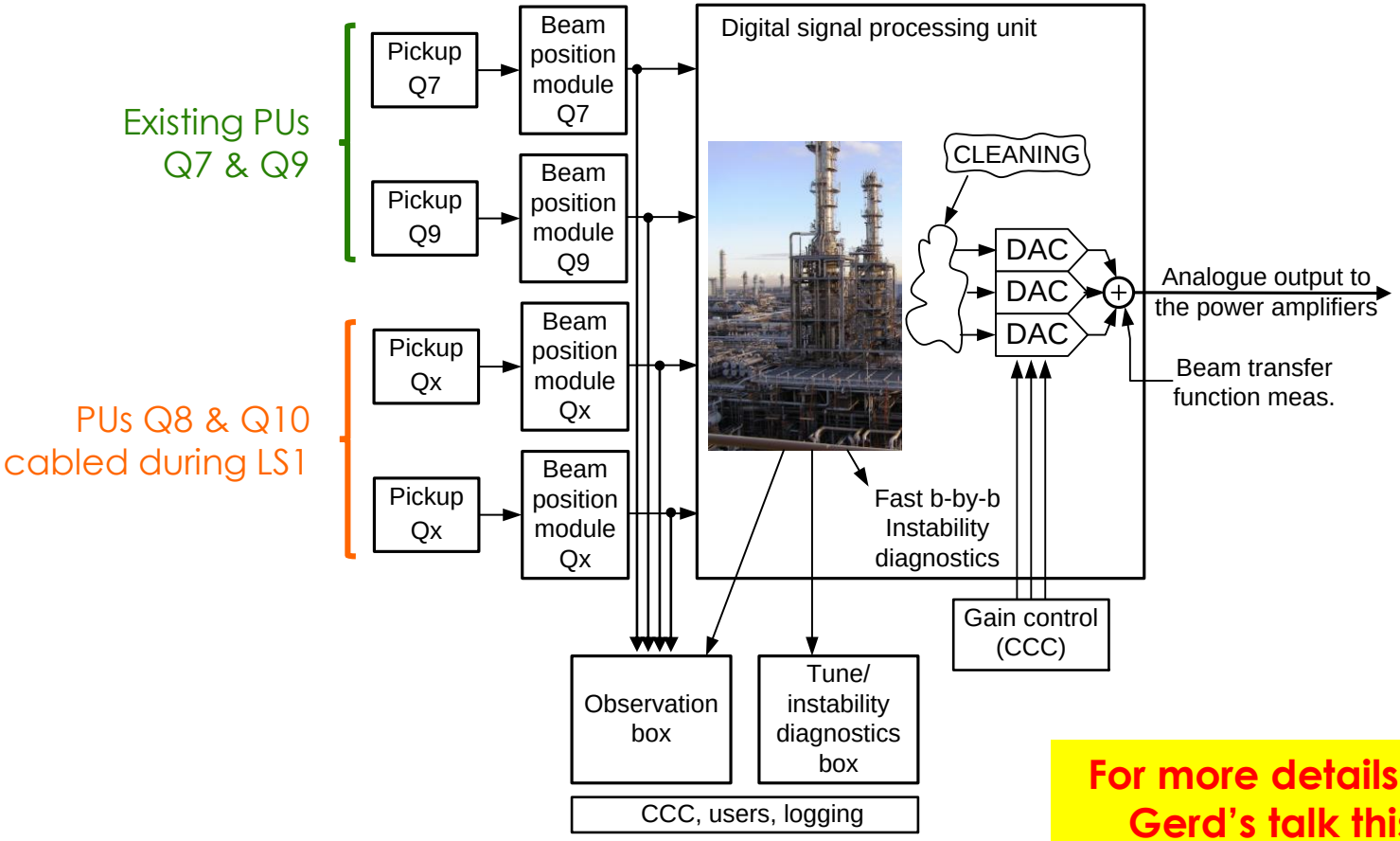

For more details on ADT see Gerd's talk this morning

Observation Box hardware status

Uses commercial PC server and BE-CO developed "SPEC" PCIe card with custom firmware (RF).

Installation for ADT:

- In late 2015, ObsBox connected to Q7 pickups (H&V, B1&B2)
- For 2016, connection of Q9 PUs
- Later, addition of Q8/Q10 PUs with new BeamPos modules

Installation for RF longitudinal:

- Raw I/Q data of Cavity Sum and Phase PU for stable phase
- Used extensively during scrubbing → see Helga's talk

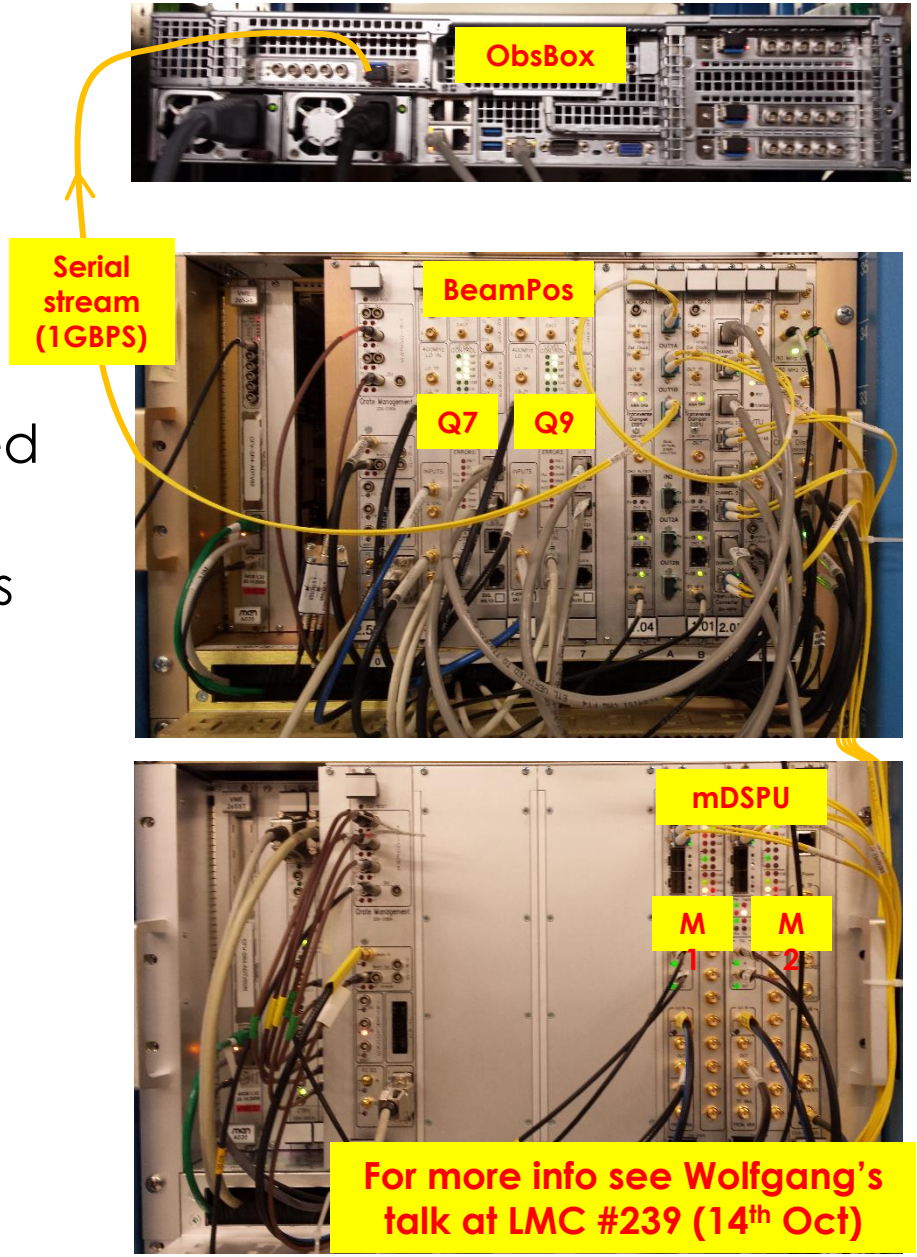

Observation Box software status

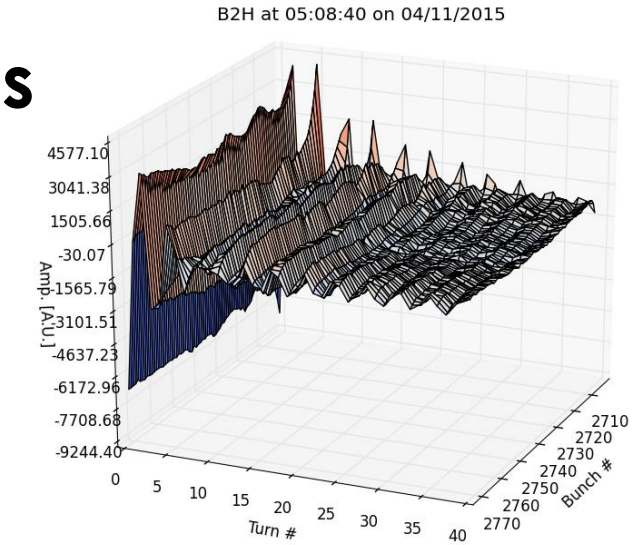

In 2015:

- Rolling buffer of 4.2 million turns (6 min)
- Acquisition constantly running to support multiple clients – no "freeze"
- Can extract sub-set of data in the buffer (i.e. any data from the last 6 minutes)
- Maximum extraction size limited by network throughput
- Scripts developed by BE-ABP (L. Carver) to save data

For 2016, plan to add dedicated "event" buffers which contain a snapshot of data around particular machine events. Foreseen buffers:

- Injection – 4k turns
- Instability trigger – 64k turns (±3 seconds requested by ABP)
- Beam dump / post mortem – 64k turns (TBC)

Some initial results including a first look at bunch-by-bunch tune presented by L. Carver (BE-ABP) at LBOC #52 (24th Nov)

L.Carver, N.Biancacci, J. Wenninger, M. Guinchard, P. Fessia

Vibration Measurements at IP1 – Beam Stability

The FFT from every acquisition is shaded and overlaid. Dark blue or red regions are noise (from many overlaid regions). Light blue or red is only from the few excitations.

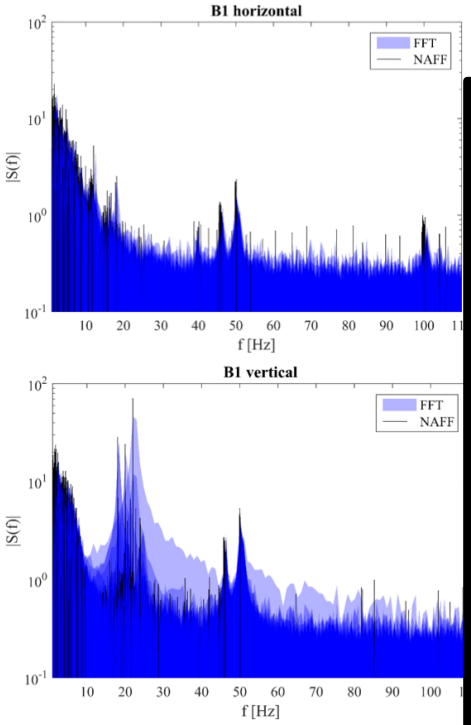

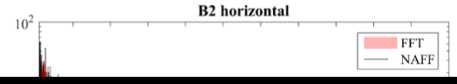

R.DeMaria, M.Fjellstrom

Tunes at injection – Injection Oscillation

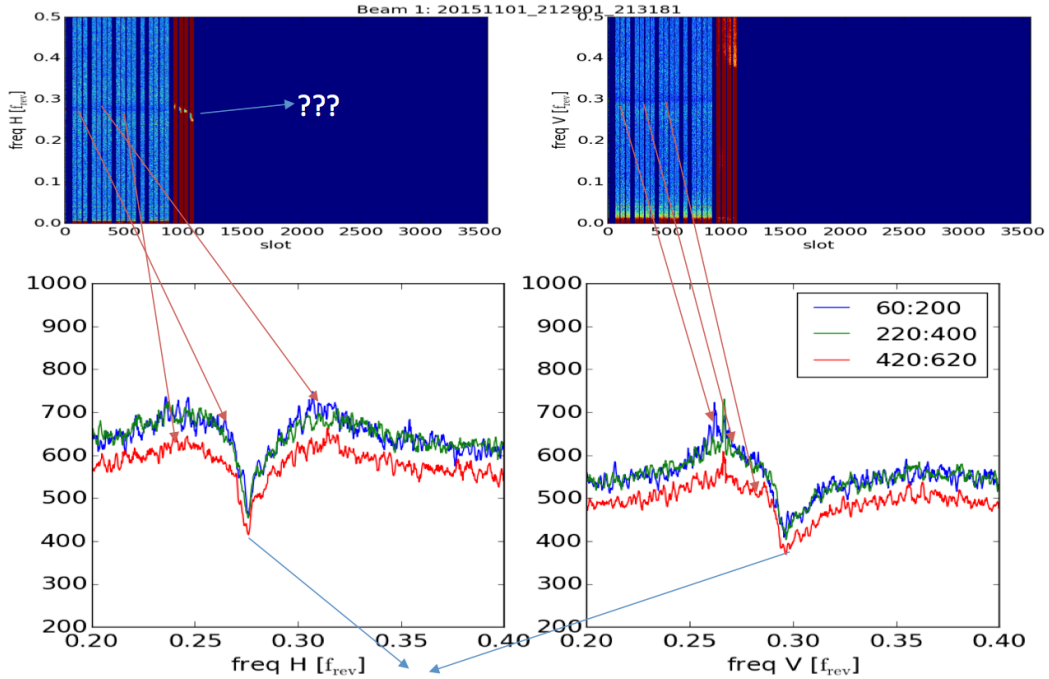

Tunes (see W. Hofle at al. Chamonix 2012)

First Observations with ObsBox

20

Data storage and analysis

In the event of an instability, a large amount of data needs to be stored and analysed…

- Head-Tail (11 turns) = 40MB (x2) => 80MB / trig
- ADT ObsBox (64k turns) = 500MB (x16…x32) => 8GB…16GB / trig

During 2015, CO provided dedicated NFS storage for Head-Tail data. Approximately 1TB saved during the 2015 run – many shots with no interesting information which could be filtered.

For 2016 with the addition of the ADT ObsBox, online analysis of the data will be essential to only store the data corresponding to a real instability.

Ultimately we need something like the post-mortem system to collect all useful data and provide diagnostics to ABP & OP.

Some initial discussions earlier this year with BE-CO but, so far, no proposal for a solution…

Summary & outlook for 2016

- LHC Instability Trigger Network
  - Running since TS1, logging available since TS2
- Head-Tail monitor
  - Good results throughout the year
  - But… generating a lot of data, needs online filtering
- BBQ Trigger
  - Running, algorithm to be improved in 2016
- MIM
  - Still under development, tests in early 2016
- ADT Observation Box
  - Installed on Q7 pickups, will be extended to Q9 ++
  - Software development ongoing
- A solution for online data analysis and storage of instability data needs to be further studied.

CERN

www.cern.ch

Spare Slides

How to improve ADC ENOB?

Two methods to be considered:

1. Time domain interleaving
   - Method used by most high-speed digitizers & oscilloscopes
   - Limited by thermal noise and jitter

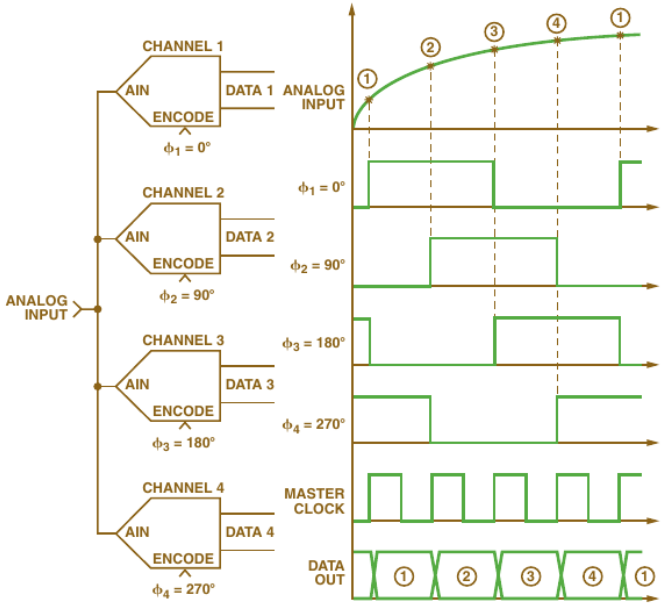

2. Orthogonal frequency multiplexing
   - Samples discreet frequency bands
   - Sometimes called cochlear radio

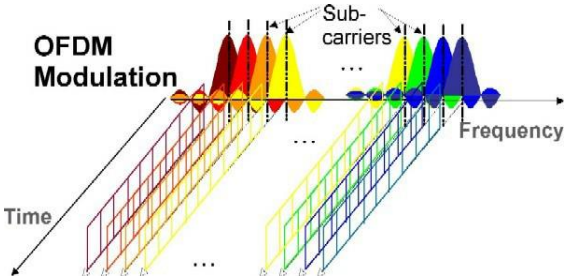

The result will be equivalent with either method, assuming the Nyqist-Shannon sampling criteria and bandwidth requirements are observed…

Multi-Band Instability Monitor (MIM)

Proposed and initially developed by R. Steinhagen and T. Lucas. Samples BPM signal frequency domain at discreet bands using a bank of RF bandpass filters:

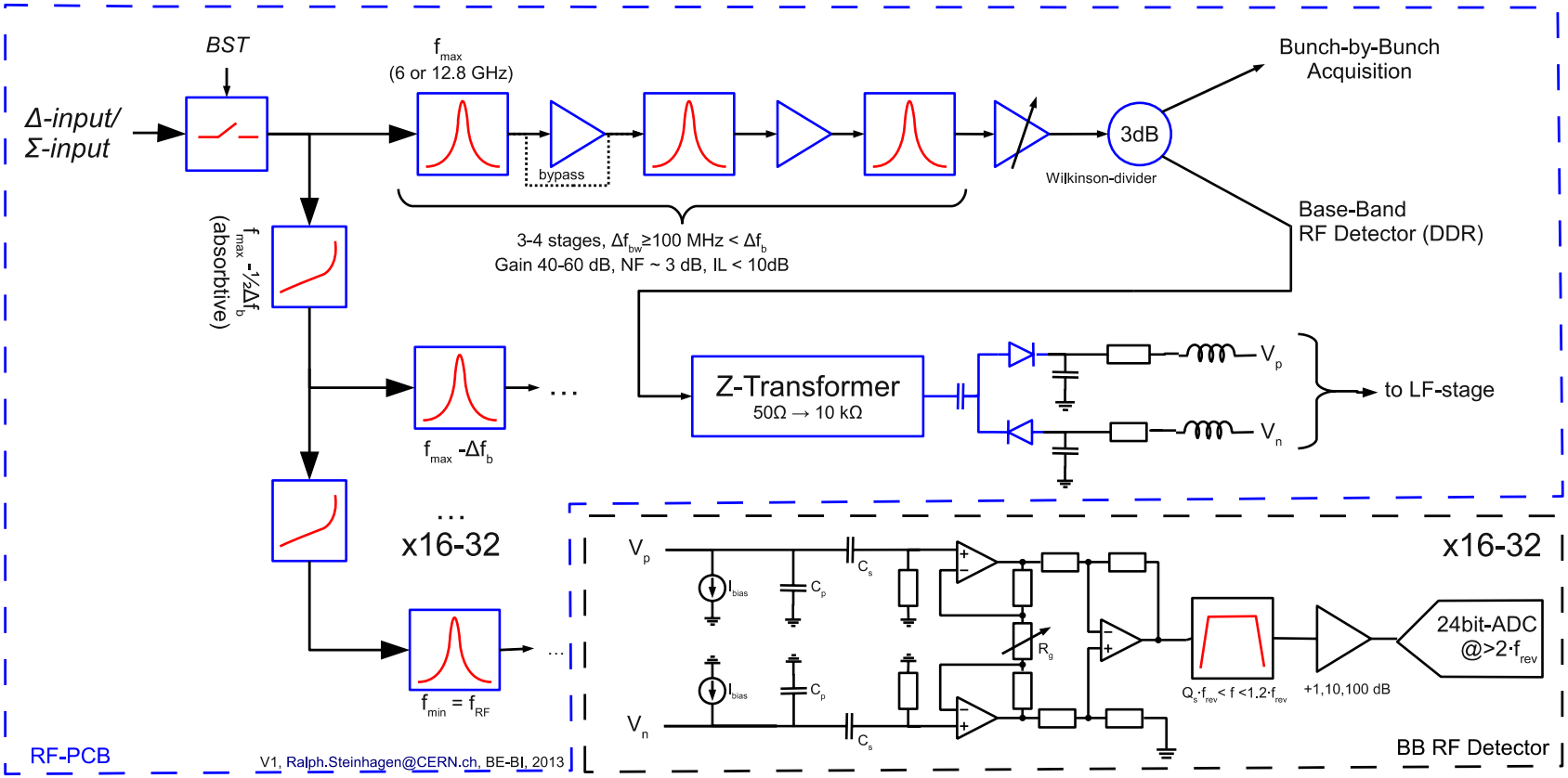

As each band has limited bandwidth, it can be mixed down to baseband and sampled high resolution ADCs.

R. Steinhagen, *et al*, "A Multiband-Instability-Monitor for High-Frequency Intra-Bunch Beam Diagnostics", IBIC, Oxford, 2013

Reconstruction from MIM

Simulated reconstruction for 16 bands by R. Steinhagen:

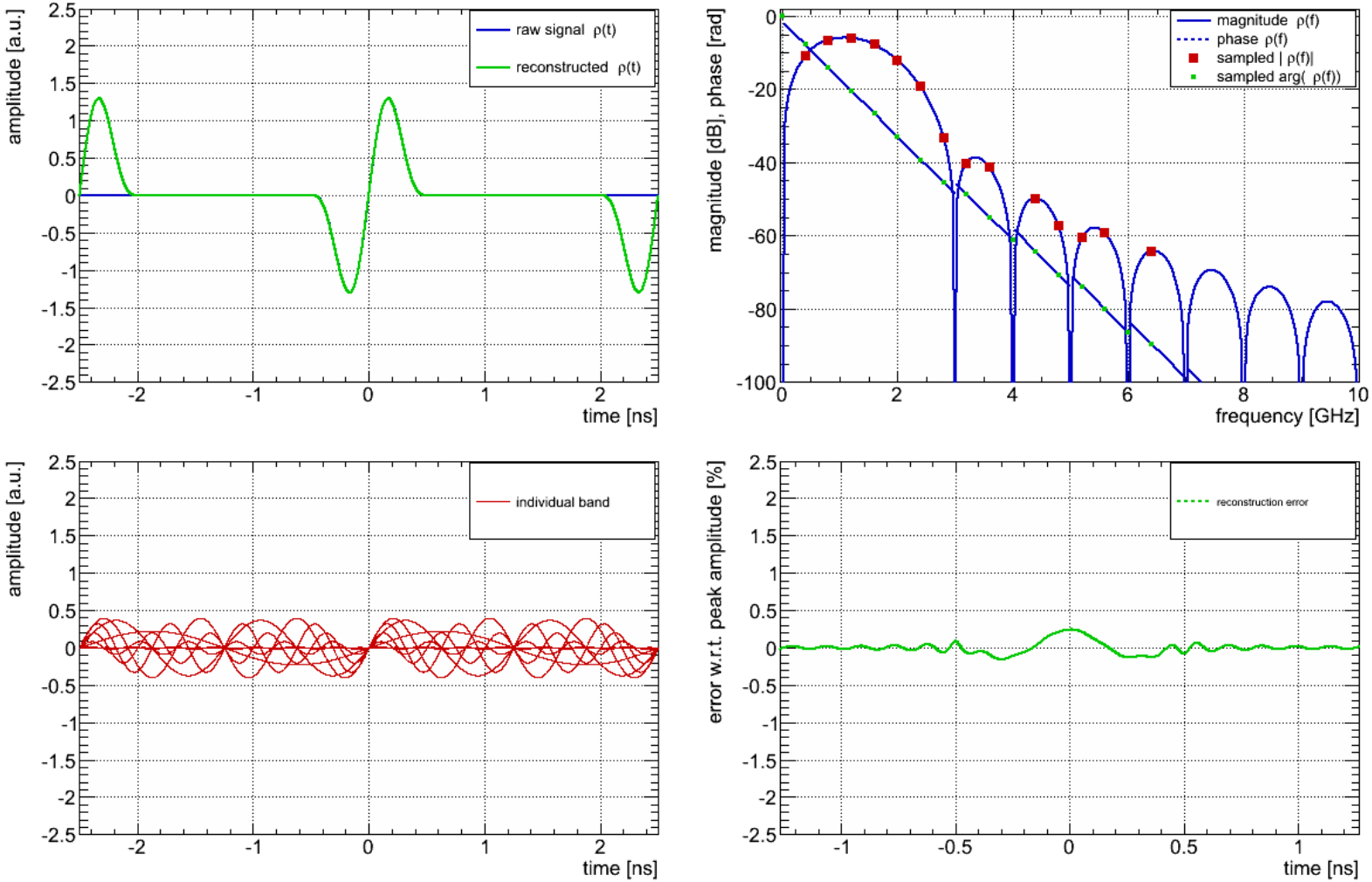

Error at percent level for 16 bands.

R. Steinhagen, *et al*, "A Multiband-Instability-Monitor for High-Frequency Intra-Bunch Beam Diagnostics", IBIC, Oxford, 2013

MIM sampling options

Once in baseband, different options to sample signals:

1. Direct diode detection (similar to BBQ)
   - Pros: simple, robust, sensitive, 24-bit ADCs
   - Cons: no phase information, not bunch-by-bunch

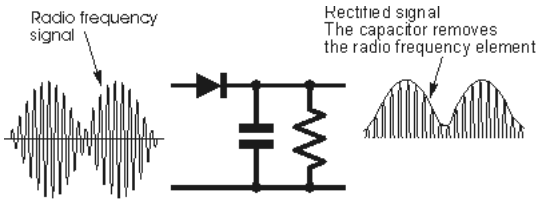

2. Heterodyne receiver & I/Q demodulation (similar to ADT)
   - Pros: amplitude & phase, bunch-by-bunch
   - Cons: complex, LO generation, limited to 16-bit ADCs

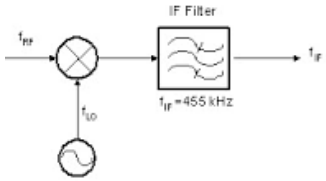

Initial versions of MIM are based on diode detection. Although no phase information (so cannot reconstruct time domain) can take advantage of the spectral shift based to determine instability mode.

MIM concept can be extended to high frequency, as has been demonstrated at the Australian Synchrotron by T. Lucas with a three band system up to 12 GHz for short electron bunches.

T. Lucas, *et al*, "An Optical Intra-Bunch Instability Monitor for Short Electron Bunches", IBIC, Melbourne, 2015

MIM filter bank for LHC

V1 8-band filter (400MHz…3.2GHz) designed by D. Valuch

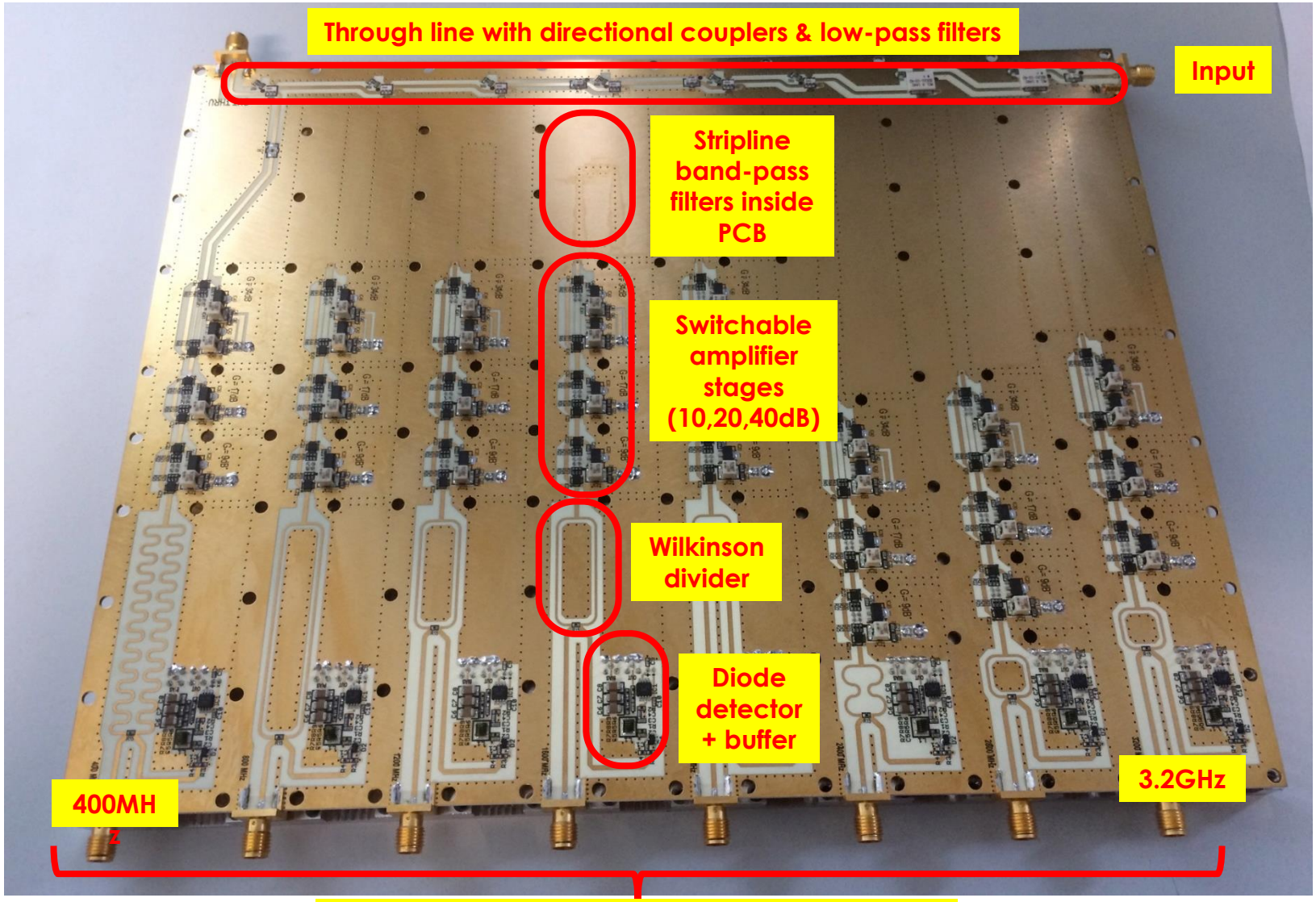

Full range outputs for bunch-by-bunch upgrade

MIM filter bank for LHC

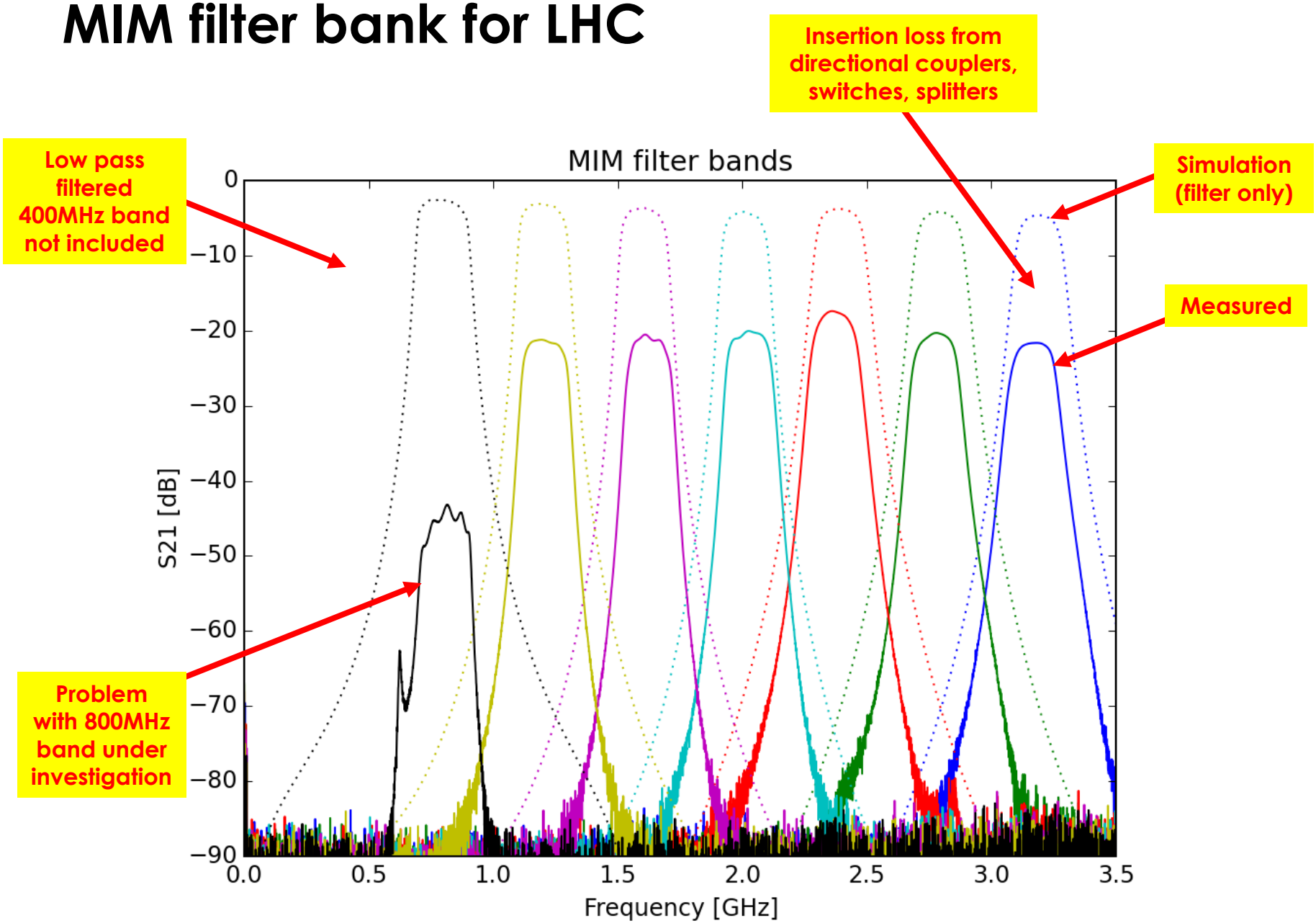

MIM readout electronics for LHC