5th conference on New Frontiers in Physics

The proton radius puzzle

M.Bonesini

Sezione INFN Milano Bicocca, Dipartimento di Fisica G. Occhialini, Universita' di Milano Bicocca

On behalf of the FAMU Collaboration

The proton radius puzzle

	Charge radius r_{ch} (fm)	Zemach radius R_Z (fm)
e^--p scattering & spectroscopy	r_{ch} = 0.8775(51)	R_Z = 1.037(16) [Dupays et al 03] R_Z = 1.086(12) [Friar & Sick 04] R_Z = 1.047(16) [Volotka et al 05] R_Z = 1.045(4) [Distler et al 11]
μ^--p Lamb shift spectroscopy	r_{ch} = 0.84089(39)	R_Z = 1.082(37) [Antognini et al 13] from HFS of $(\mu^- p)_{2S}$

Spatial charge and magnetic moment distributions $\rho_E(r)$, $\rho_M(R)$ in non-relativistic picture .

The complete set of moments $R^{(k)}_{E,M} = \int \rho_{E,M}(r) r^k d^3r$ is related to the observable quantities:

$$r_{ch} = (R^{(2)}_E)1/2$$
$$R_Z = \int \left(\int \rho_E(r')\rho_M(r-r')d^3r' r\right) d^3r$$

Proton radius

Charge radius

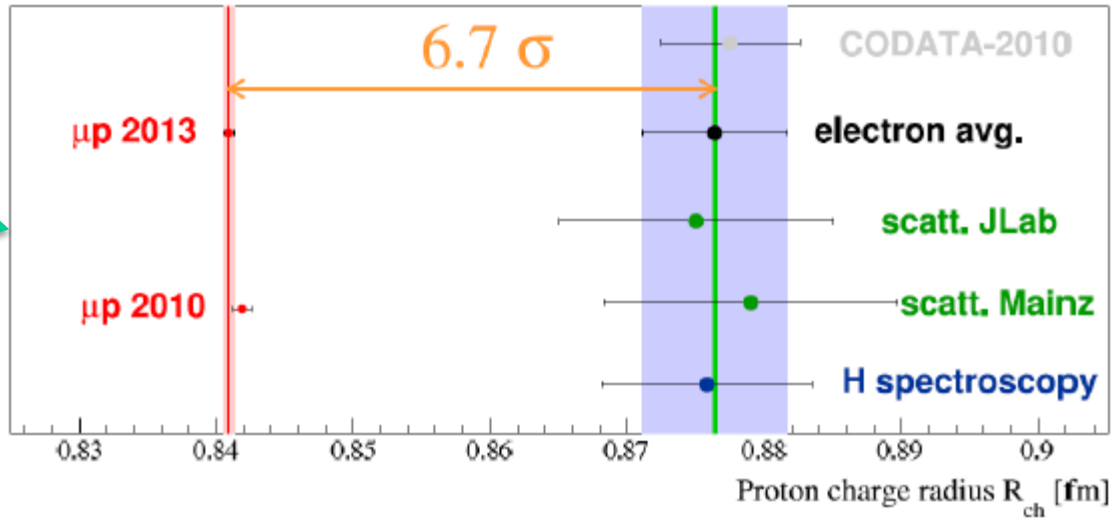

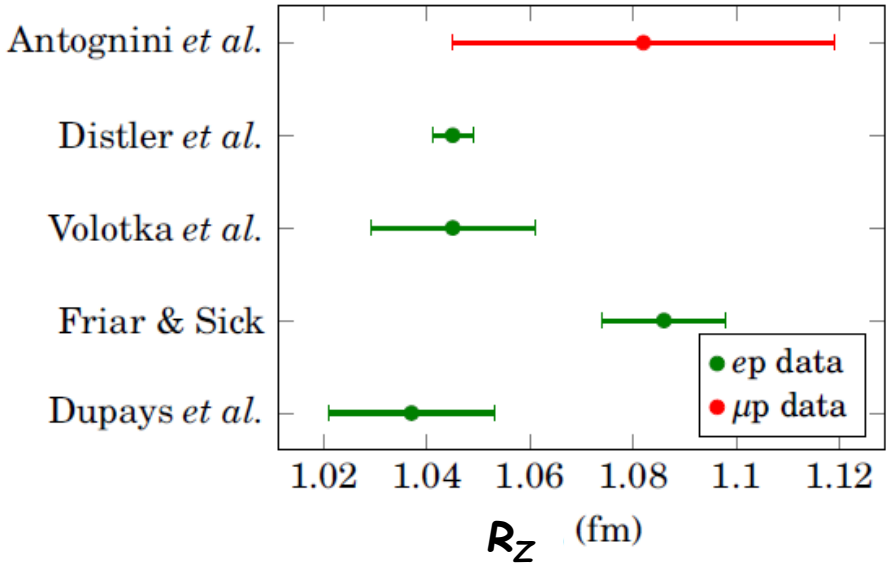

Zemach radius

The FAMU experimental method

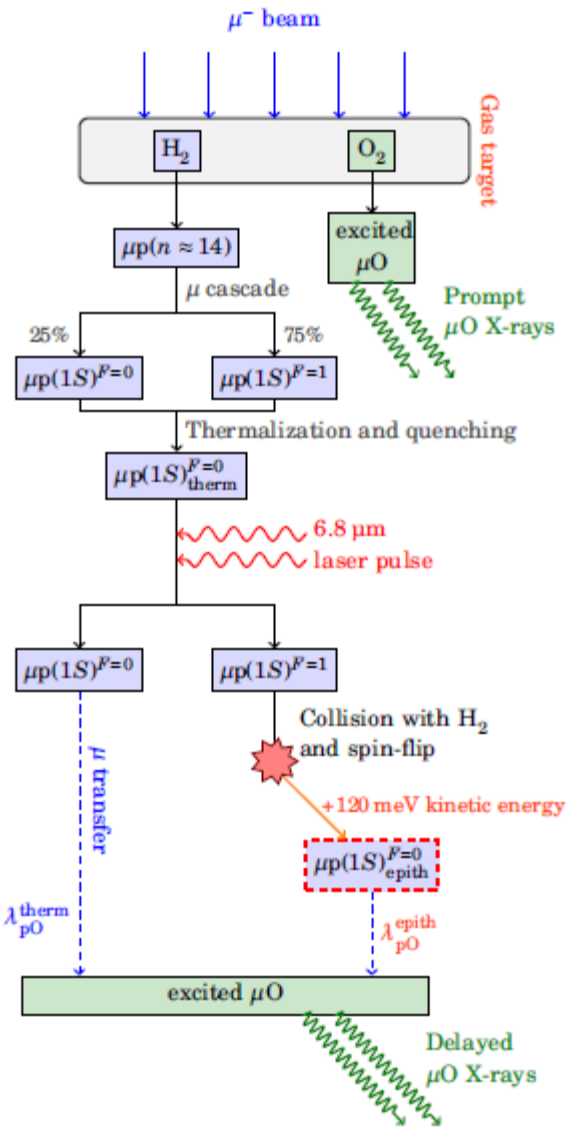

- muonic hydrogen atoms are formed in a hydrogen gas target.
- In subsequent collisions with H2 molecules, the μp de-excite to the thermalized μp in the (1S) F =0 state.
- A laser tuned on the HFS resonance induces singlet-to-triplet transitions; then, the μp atoms in the (1S) F =1 state are de-excited back to the singlet state and the transition energy is converted into additional kinetic energy of the μp system.
- Thus the μp atom gains about two-thirds of the hyperfine transition energy (≈ 120 meV).
- *The energy dependence of the muon transfer from muonic hydrogen to another higher-Z gas is exploited to detect the occurred transition in μp.*

In more detail

1. $\mu^- p(\uparrow\downarrow)$ absorbs a photon of resonance wavelength

   $\lambda_0 = hc/\Delta E^{1S}_{HFS}$ ~ 6.8 μ ~ 0.183 eV

   Converts the spin state of the ($^-\mu p$) atoms from $^1S_0$ to $^3S_1$

   $\mu^- p(\uparrow\downarrow) \rightarrow \mu^- p(\uparrow\uparrow)$

2. $\mu^- p(\uparrow\uparrow)$ $^3S_1$ atoms are collisionally de-excited to

   $\mu^- p(\uparrow\downarrow)$ $^1S_0$ and accelerated by ~ 0.12 eV ~ 2/3 ΔE^{HFS}_{1S}

Energy-dependent muon transfer rates change the time distribution of the events λ_0 is recognized by maximal response

The RiKEN-RAL muon facility at RAL

RIKEN-RAL facility

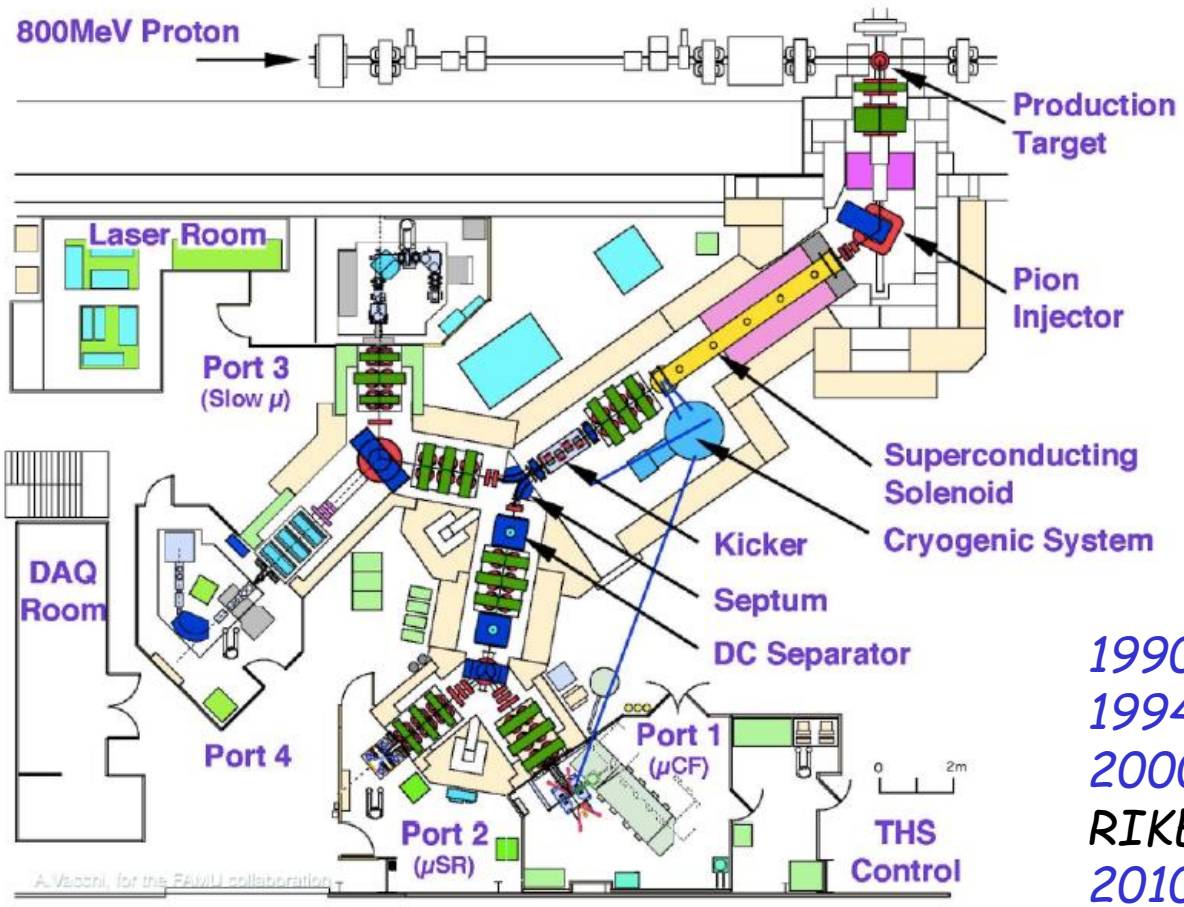

ISIS at RAL

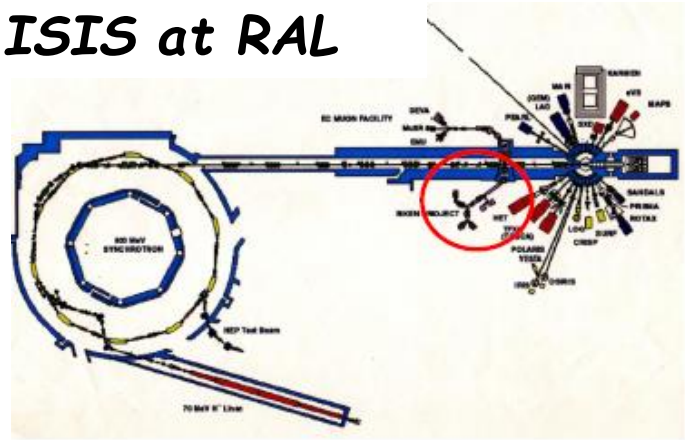

800 MeV p accelerator , 200 mA, 50 Hz

1990 First RIKEN-RAL agreement
1994 first muon beams
2000 second agreement between RIKEN and CCLRC
2010 third agreement between RIKEN and STFC (for 7.5 years)
2018 Next agreement for 2018-2023 under discussion

The RIKEN-RAL facility: 4 experimental ports. FAMU presently use port 4 and will move to port 1 for the final run.

The RiKen-Ral muon facility: some images

ISIS: 800 MeV Proton accelerator (2 target stations T1,T2 for muon, neutron production)

RIKEN-RAL ports layout

RIKEN-RAL muon beams

Beam properties
surface μ^+ (20-30 MeV/c)
decay μ^+/μ^- (20-120 MeV/c)

Typical beam size ~10 cm^2
$\Delta p/p$ FWHM 10% (decay), 5% (surface)
Double pulse structure (see below)

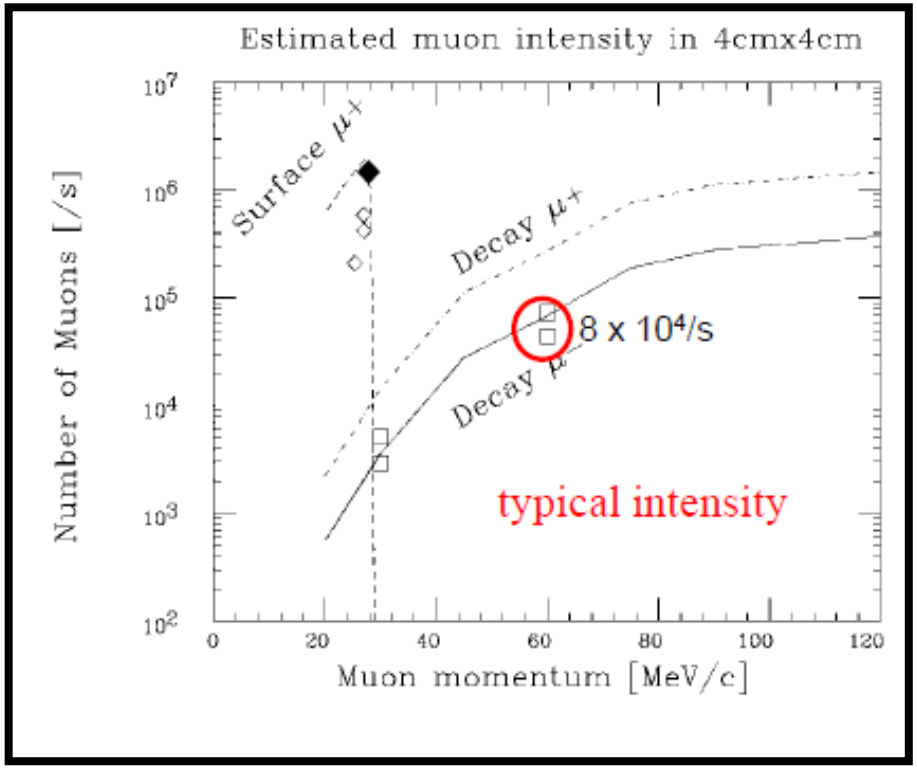

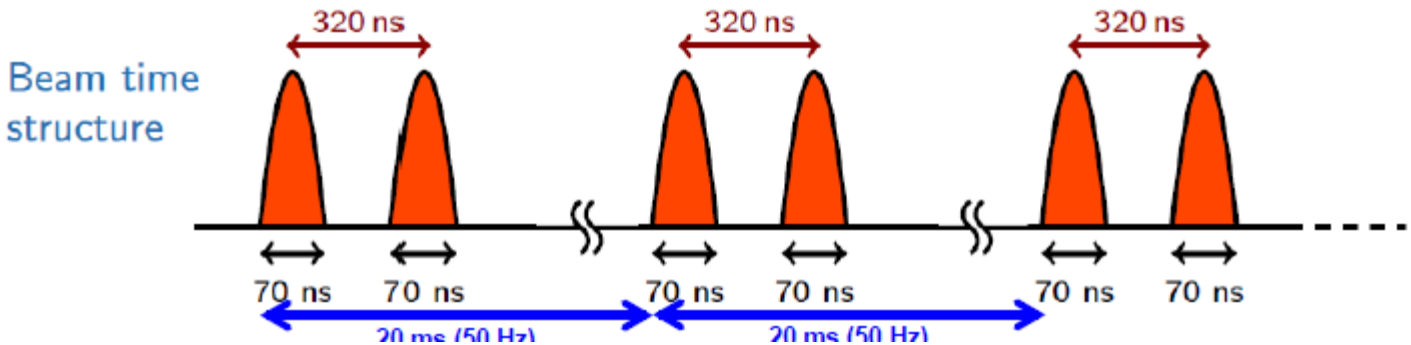

The FAMU proposal experimental phases

1. *Muon beam study, target and detectors tests, preliminary measure of transfer rate (@ constant conditions of PTV) – 2014 beam test (results later)*
2. *Optimize run conditions: best gas mixture at temperature T and pressure p (to be determined) to observe and measure the transfer rate energy dependennce – 2015 December run and February 2016 run*
   → *At this point the validity of the method to measure HFS is demonstrated*
3. *Full working setup with laser and cavity to determine proton Zemach radius (2017-2018)*

The setup for the 2014 run

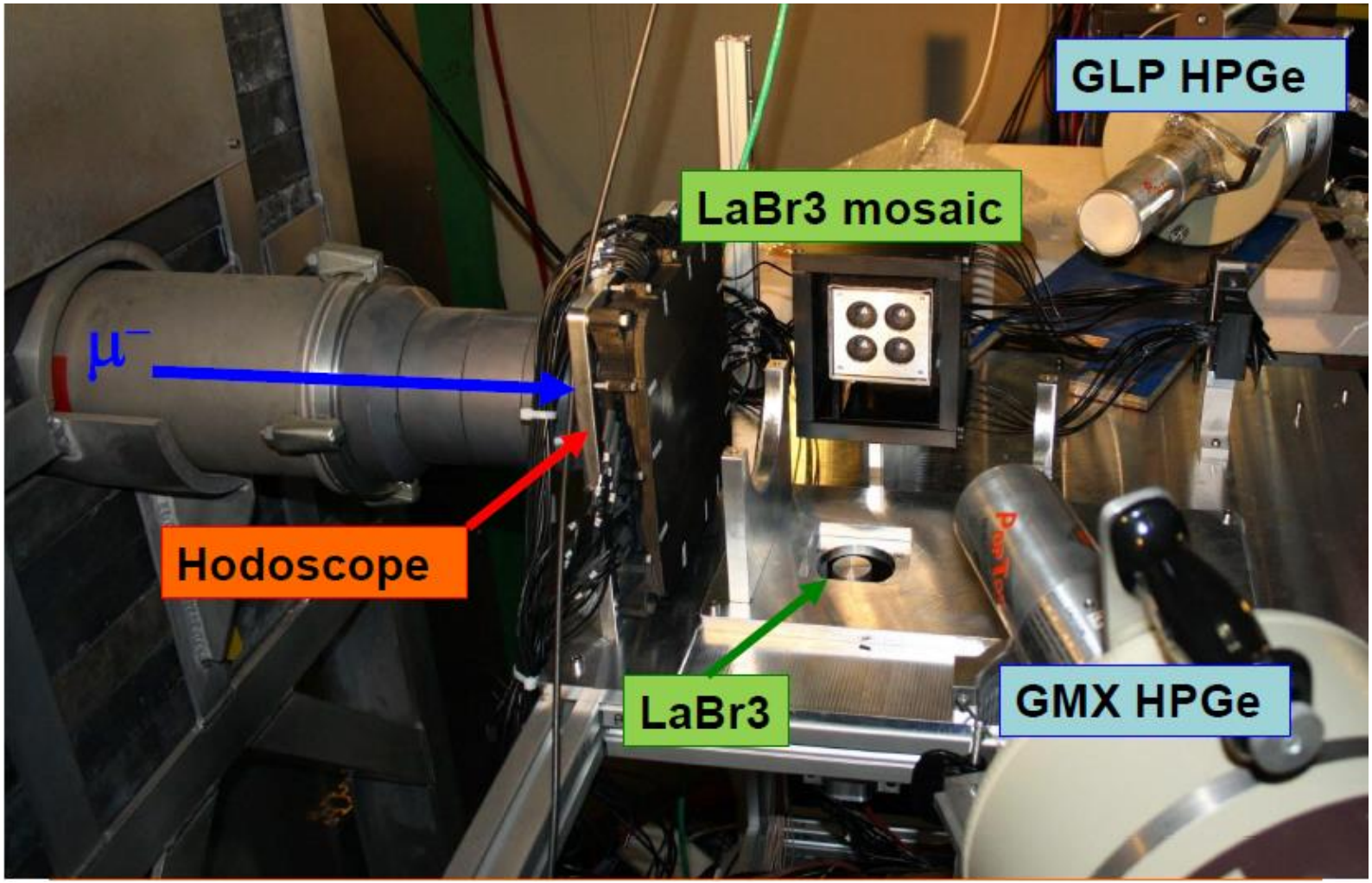

Preliminary setup for first muonic transfer rate measurements
Setup prepared in less than 4 months

The setup for the 2014 run (II)

- ***Gas targets*** *in Al vessel @ 40 atm and room temperature:*
  - H_2
  - H_2+ 2% Ar
  - H_2+4% CO_2

+ test on solid graphite target

- ***Detector system:***
  - *3mm pitch beam hodoscope to study beam*
  - *LaBr3 crystals with PMT readout for fast X-rays detection*
  - *Germanium HPGE for precise X-rays detection (2)*

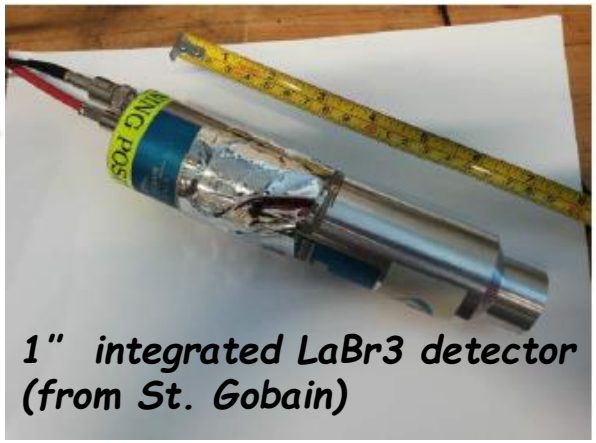

1" integrated LaBr3 detector (from St. Gobain)

2x2 matrix of 0.5 " LaBr3 crystals read by PMTs

The setup for the 2015-2016 run

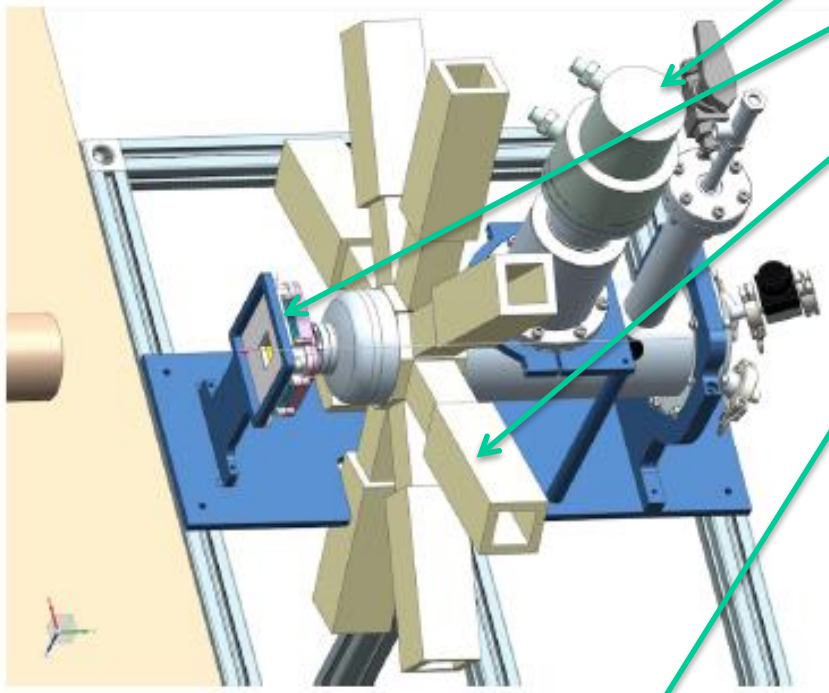

- Cryogenic target
- Beam hodoscope with 1 mm pitch (scintillating fiber with SiPMT readout)
- LaBr3 crystals with PMT readout (8 detectors arranged as a star) for X-ray fast detection
- HpGe detectors (4) for precise X-rays detection
- PrLuAg or CeCAAG crystals with SiPMT arrays compact readout for detection of X-rays in otherwise unaccessible regions (e.g. under the target)

a croppy layout

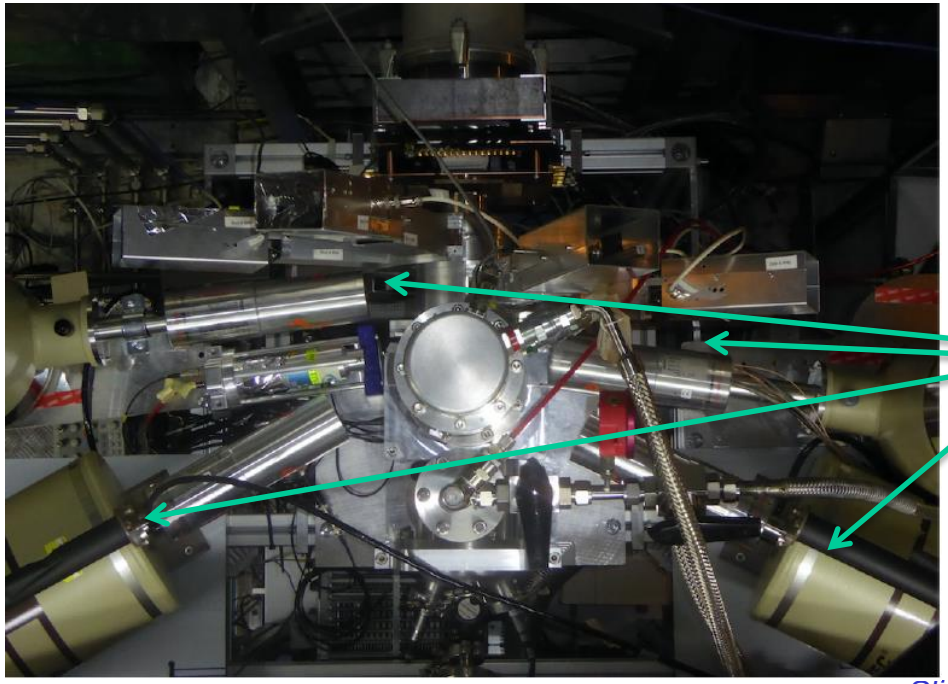

Cryo target

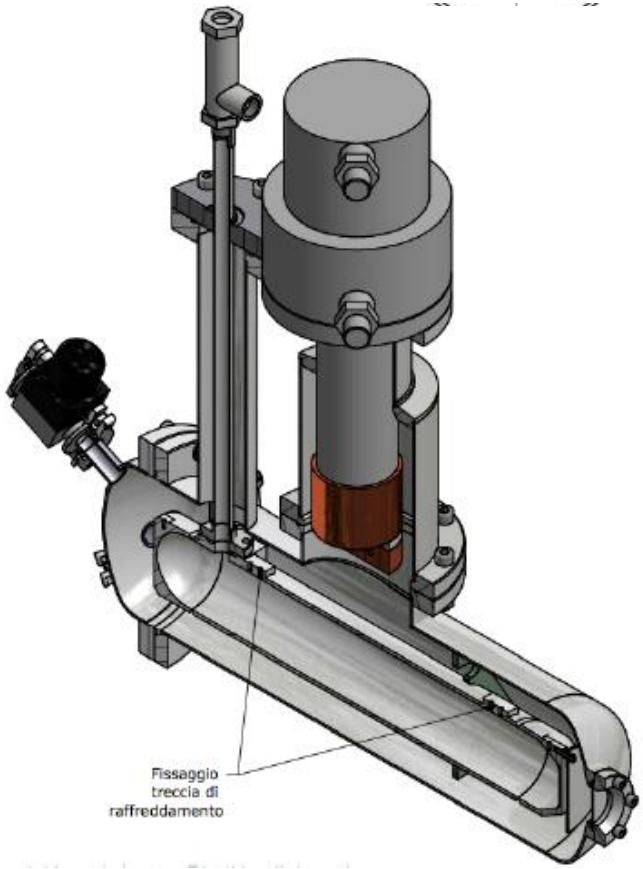

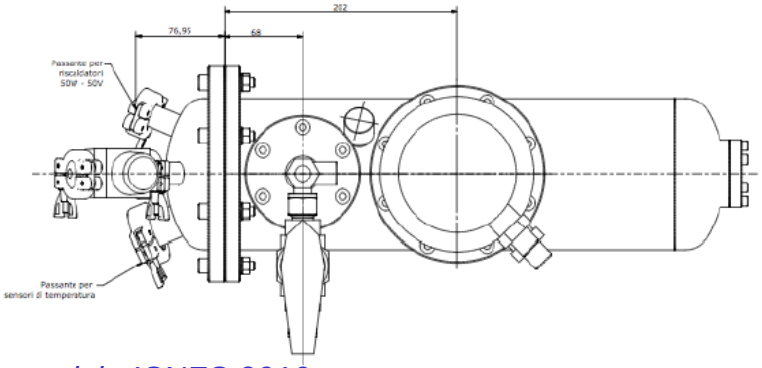

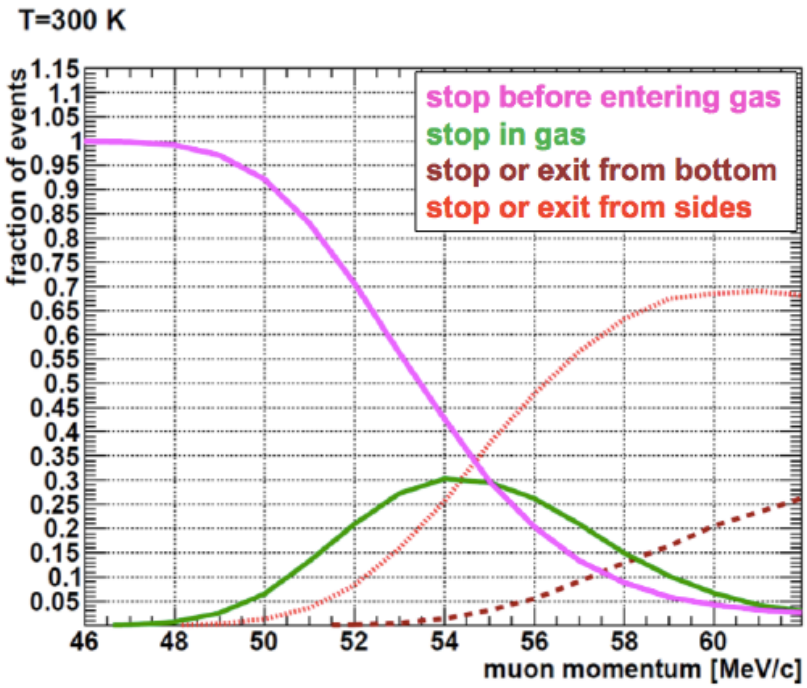

- *Complicate design to minimize material along beamline (eg Be window)*
- *Ni+Au internal coating to reduce noise from muon decay electrons*
- *Must work at different p,T values*
- *Data taken with:*
  - *H/O (0.05%,0.3%,1%)*
  - *H/Ar (0.05%,0.3%,1%)*
  - *H/CO_2 (0.05%,0.3%.1%)*
  - *H/CH_2 (0.05%,0.3%,1%)*

Beam hodoscope

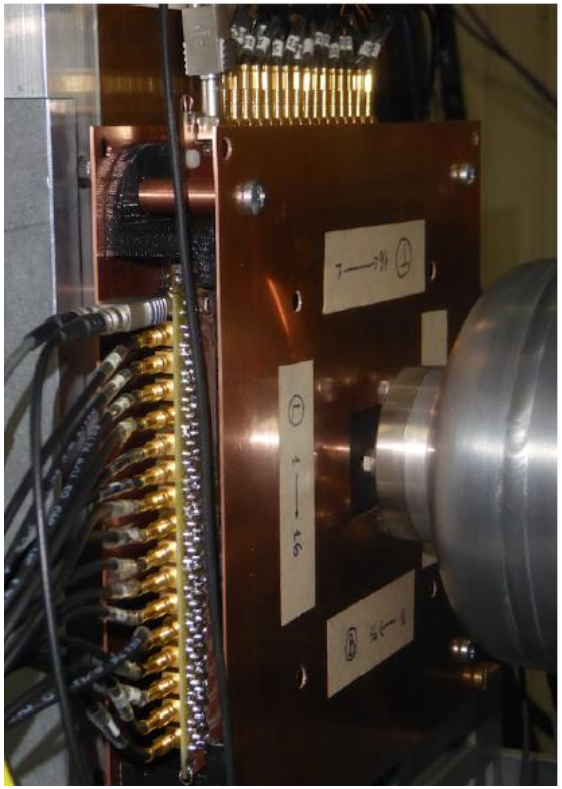

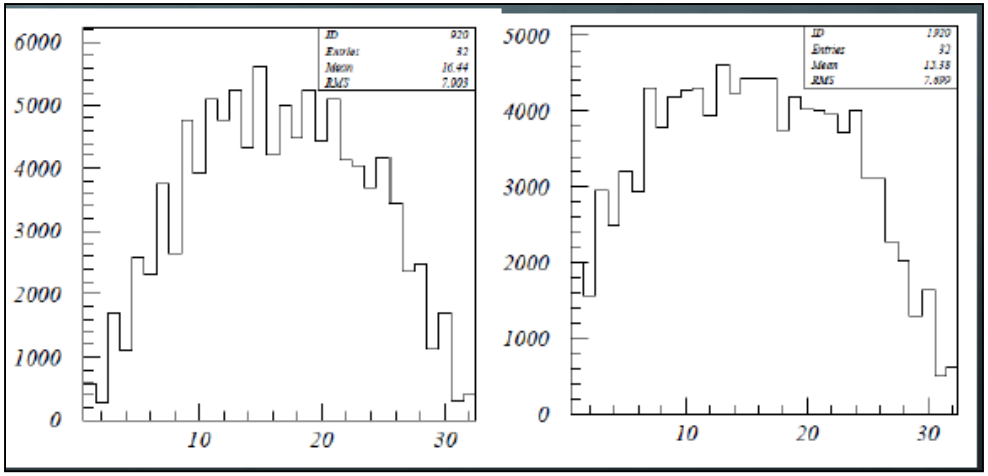

- *1 mm square BCF12 from Bicron with EMA coating (to avoid cross-talk) to minimize material along beamline*
- *Alternate up/down-left/right readout for 32+32 X/Y chs*
- *Mechanics printed out on 3D printer*
- *Readout with CAEN V1742 FADC (waveform info)*
- *One side (16 channels) is powered by a single HV channel*

❑ *x/y beam RMS resolution (after collimator) ~7/8 mm*

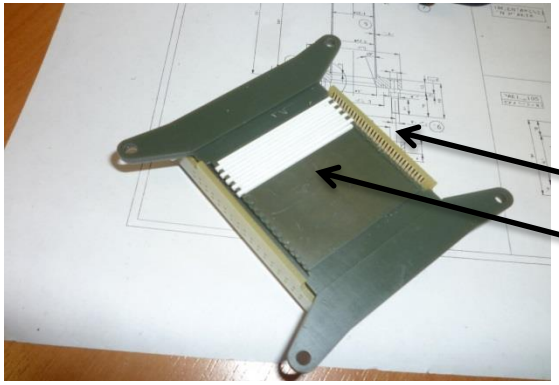

PCB with16 SiPM da 1x1 mm^2
1x1 mm^2 Bicron BCF12 square fibers

LaBr3 crystals/HPGe detectors for X-rays detection

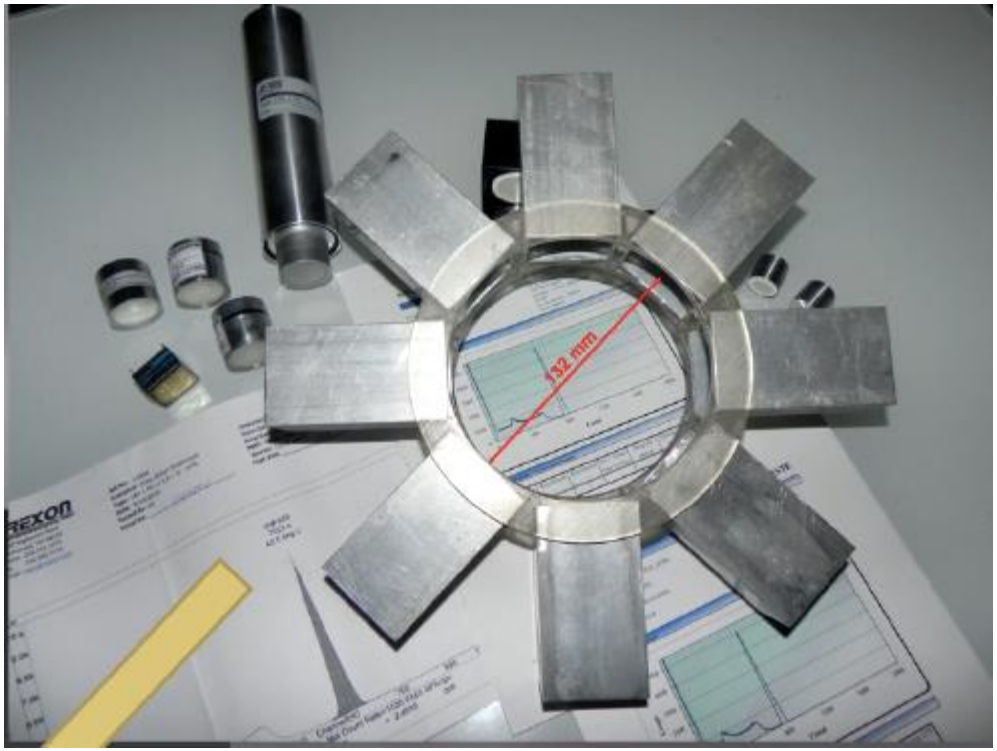

- *8 1" LaBr3(Ce) detectors arranged in a star. Readout by Hamamatsu R11265-200 UBA PMTs, wth active divider and CAEN V1730 FADC (500 MHz)*

- *4 conventional HPGe detectors , read out with CAEN V1724 FADC (100 MHz) . Positioned with a clumsy mechanical arrangement.*

A snapshot of X-rays spectrum

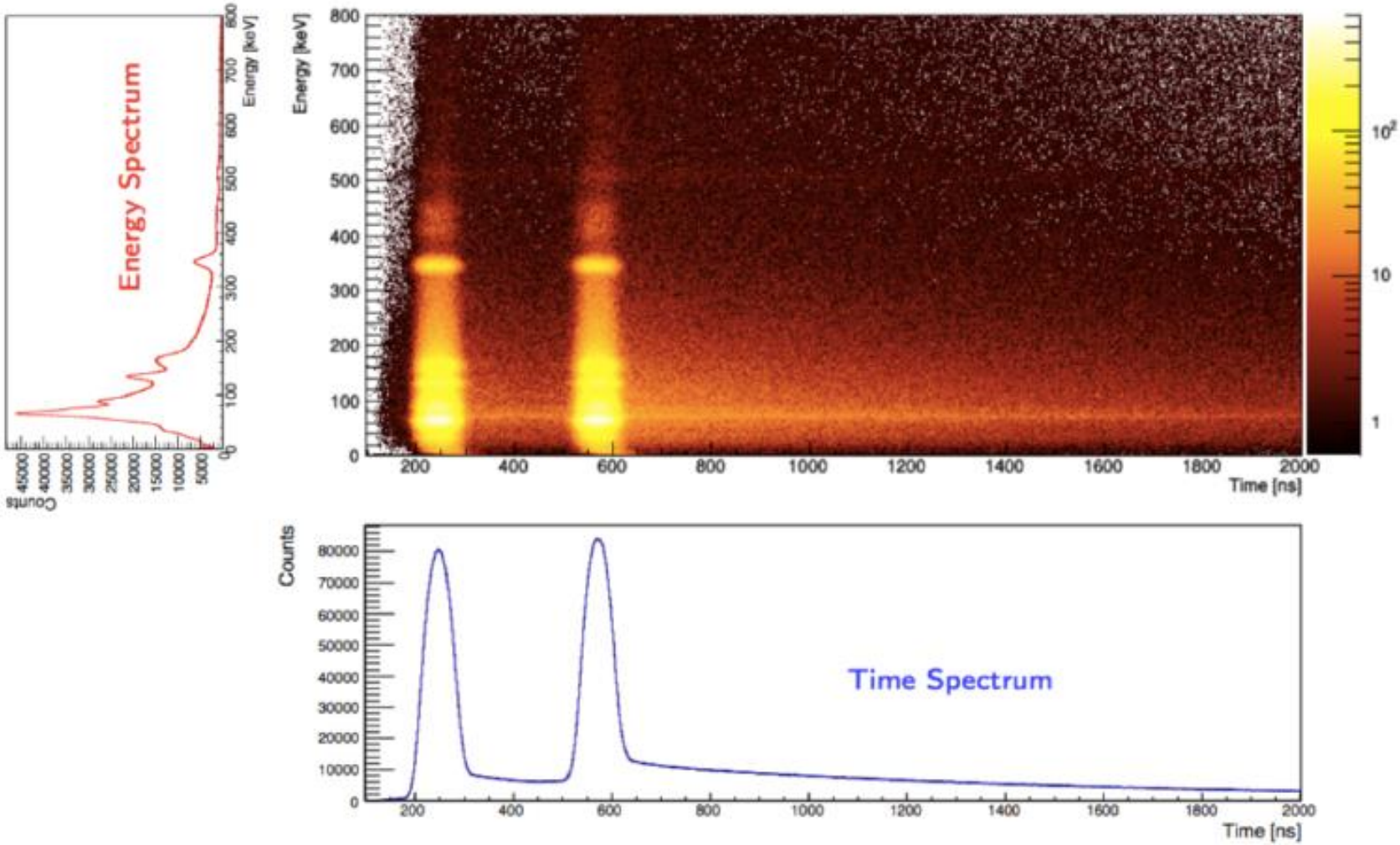

Detector performances: HpGe detectors

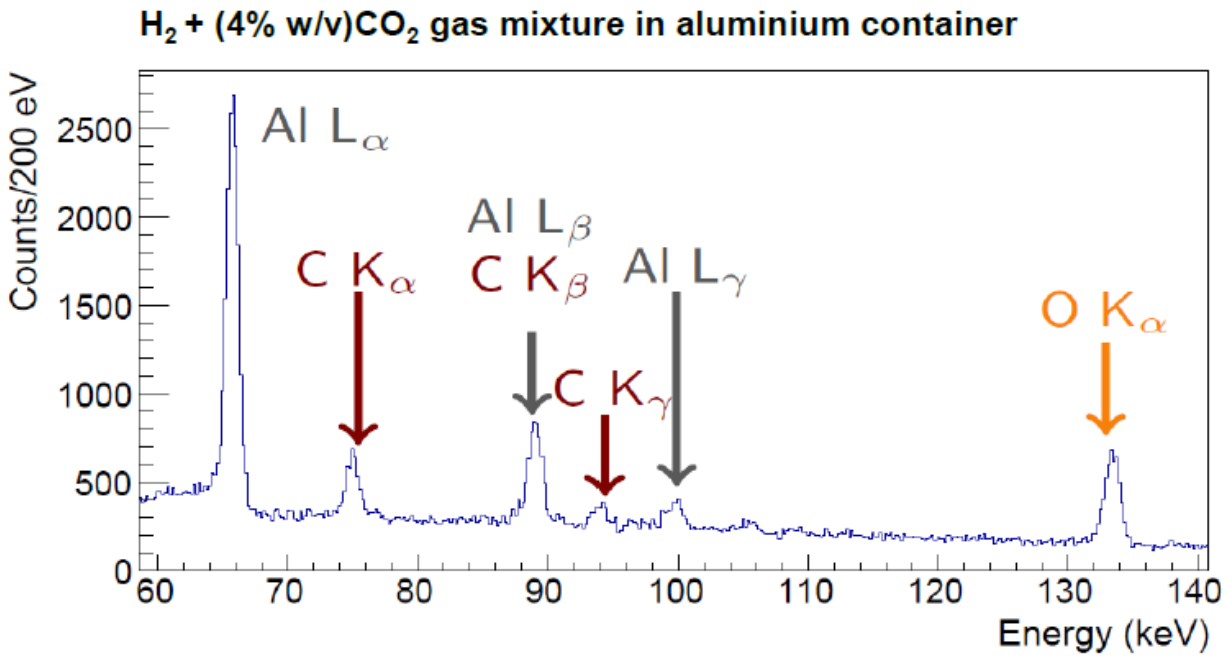

Used for inter-calibration : high energy resolution, limited timing resolution

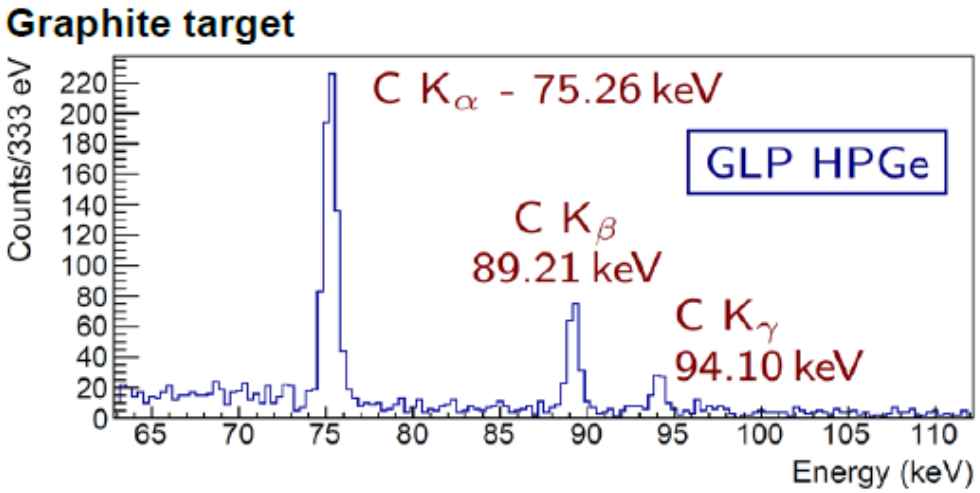

Detector performances: LaBr3(Ce) detectors

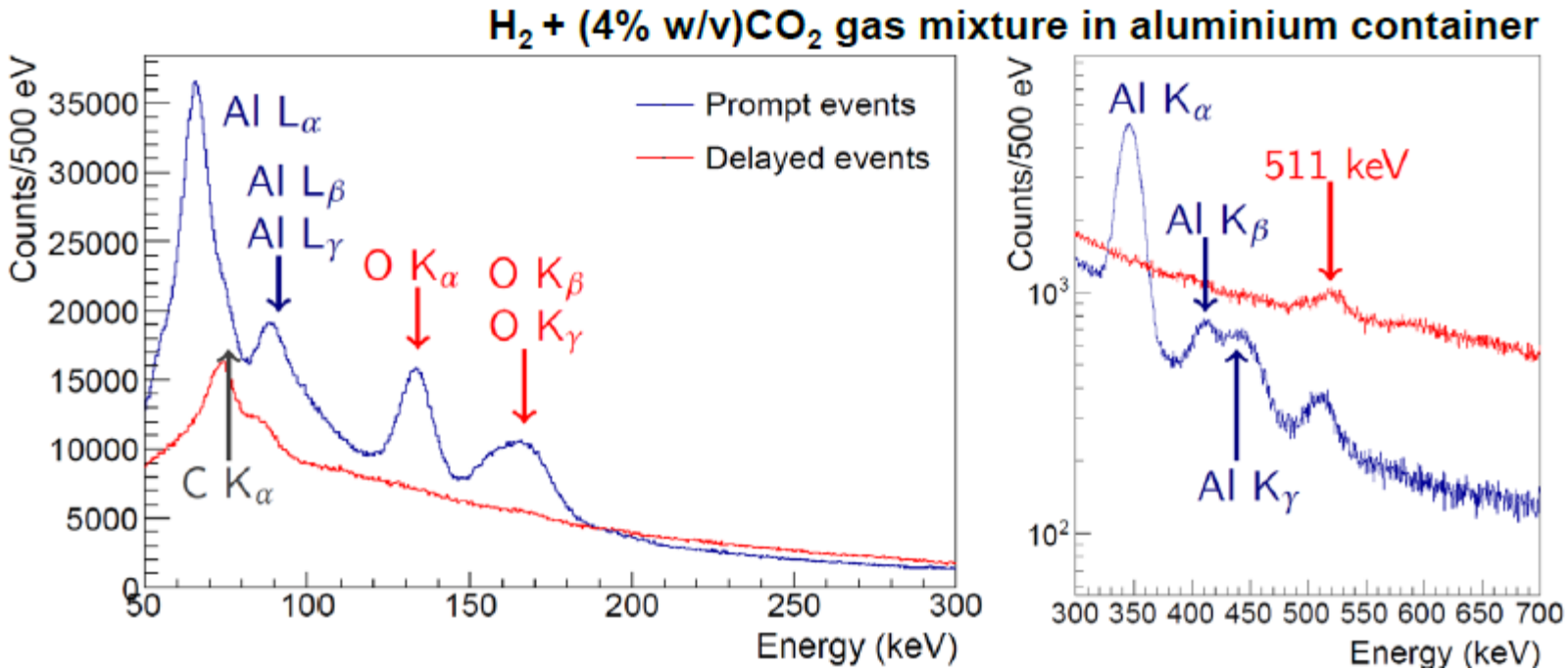

- ***In these plots we see both***
  - ***prompt X-rays (in time with beam spill) → reflect beam spill structure***
  - ***Tails of the distribution (products of μ decay) → convey infos on muonic atom lifetimes***

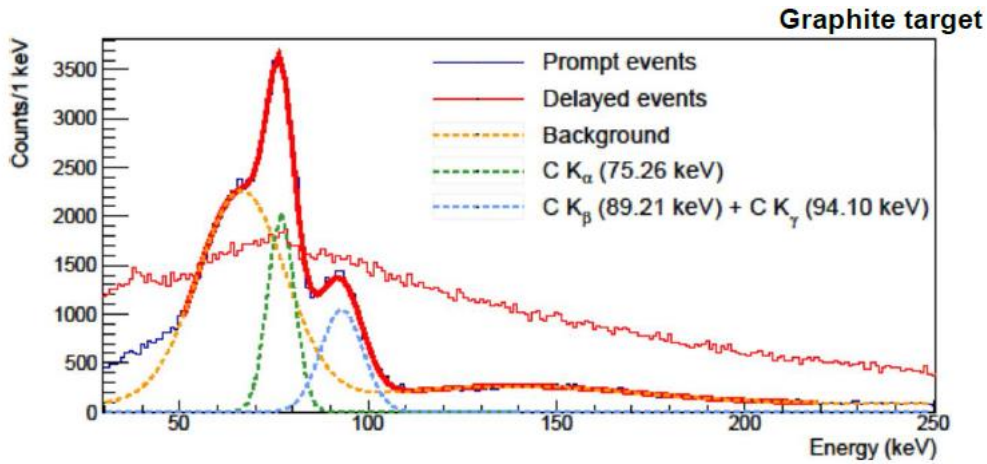

Spectroscopic lines seen:

Transition	Transition energy (keV)				
	C	N	O	Al	Ar
K_α	75.258	102.556	133.535	346.828	644.004
K_β	89.212	121.547	158.422	412.877	770.6
K_γ	94.095	128.194	167.125	435.981	815.0
L_α			24.830	65.756	126.237
L_β			33.521	88.771	170.420
L_γ				99.360	190.870

resolved, not resolved, not seen, low statistics

HpGe detectors

LaBr3 crystals

Transition	Transition energy (keV)				
	C	N	O	Al	Ar
K_α	75.258	102.556	133.535	346.828	644.004
K_β	89.212	121.547	158.422	412.877	770.6
K_γ	94.095	128.194	167.125	435.981	815.0
L_α			24.830	65.756	126.237
L_β			33.521	88.771	170.420
L_γ				99.360	190.870

- ***To see characteristic X-ray lines in a large background environment (a fundamental requirement for the experiment) was NOT taken for granted***

2016 run: X-rays spectra at different T

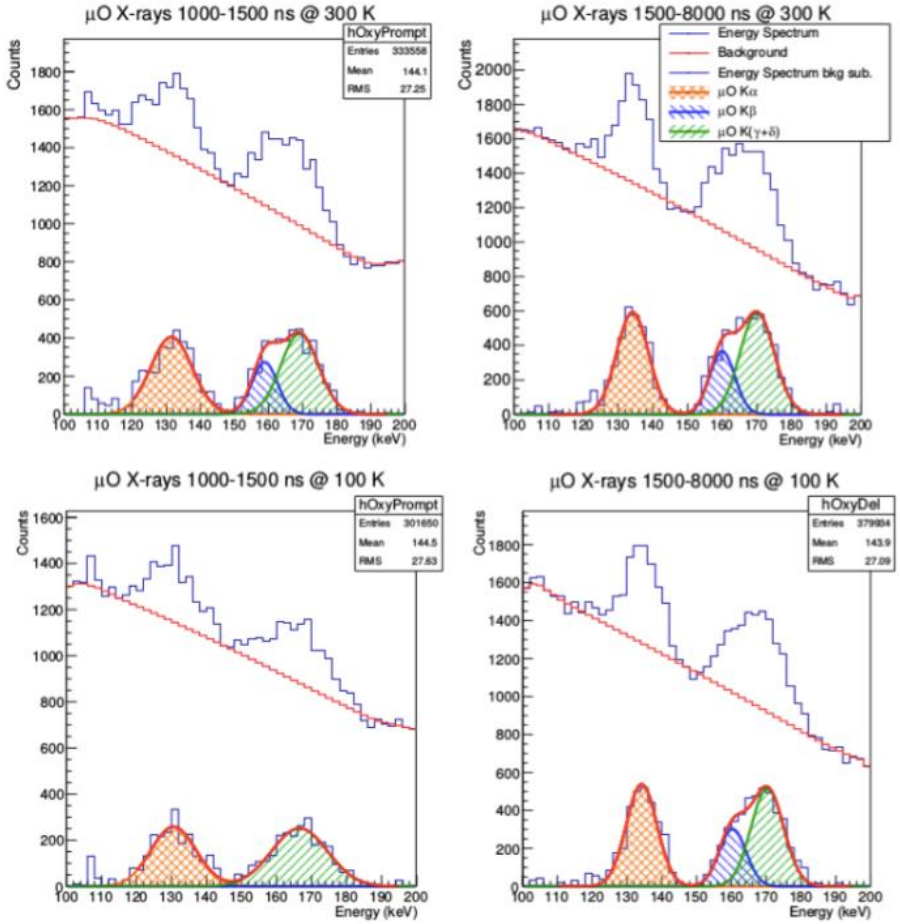

First glance at the μ transfer temperature dependence

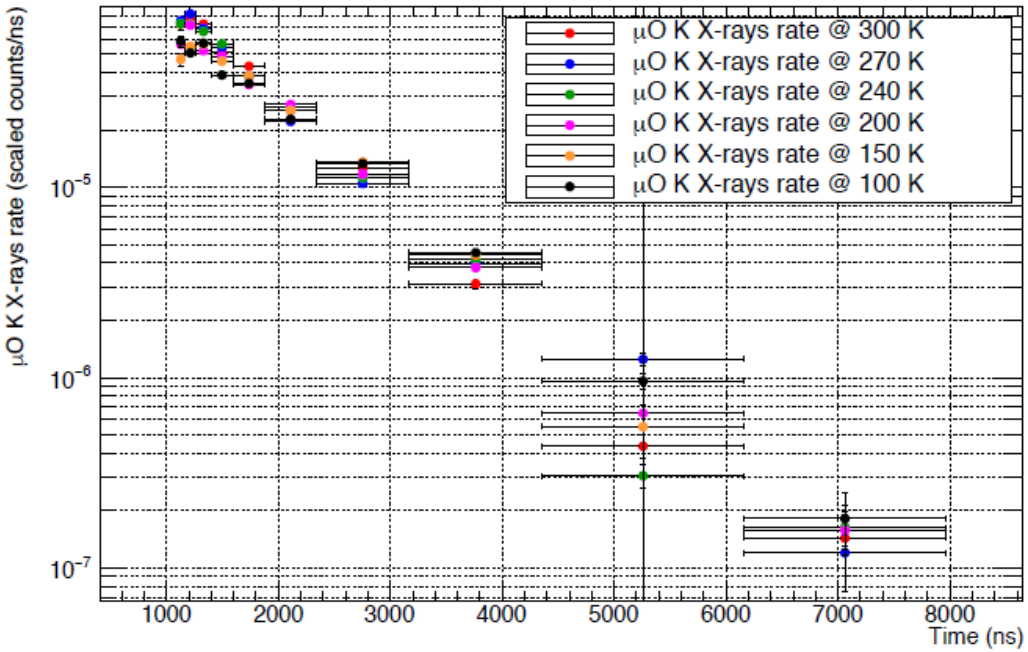

Muonic transfer rate measurement

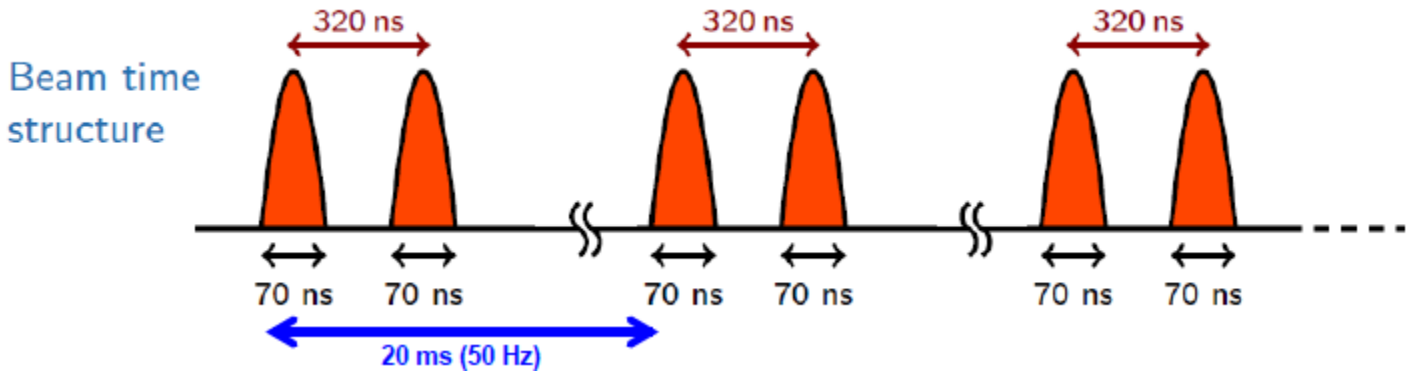

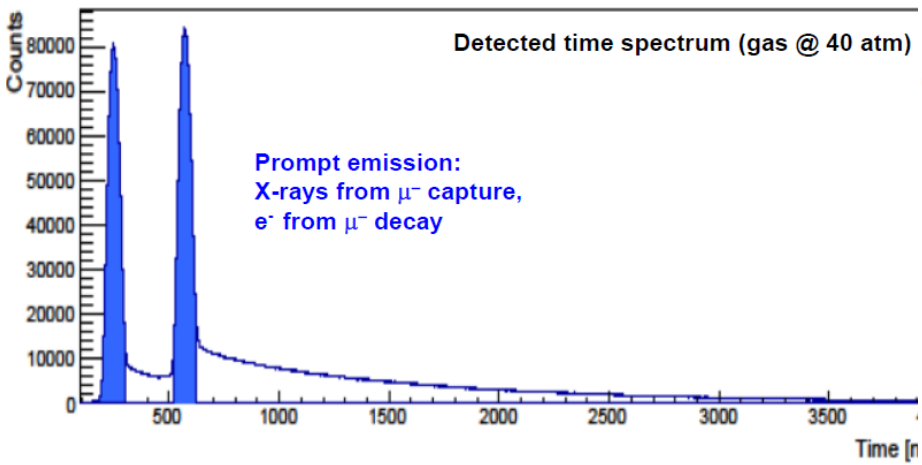

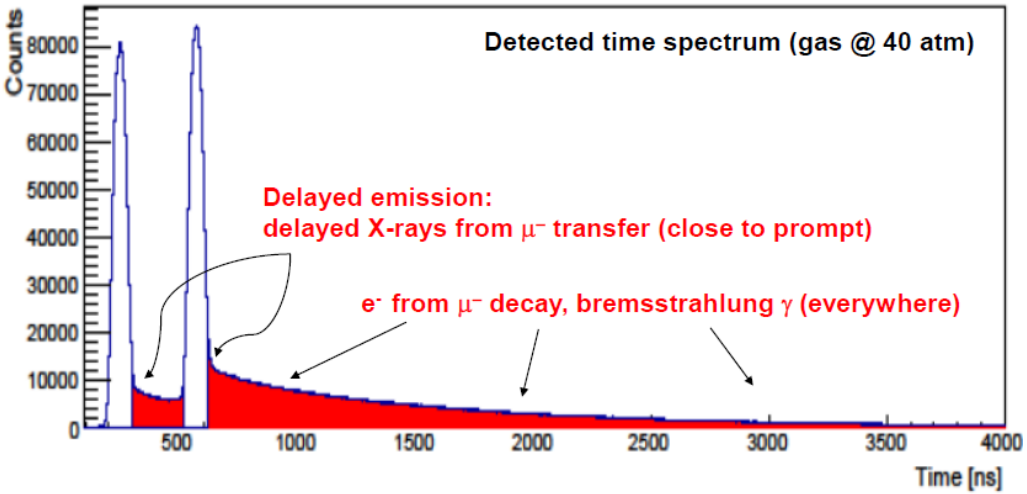

Muonic transfer rate measurement (II)

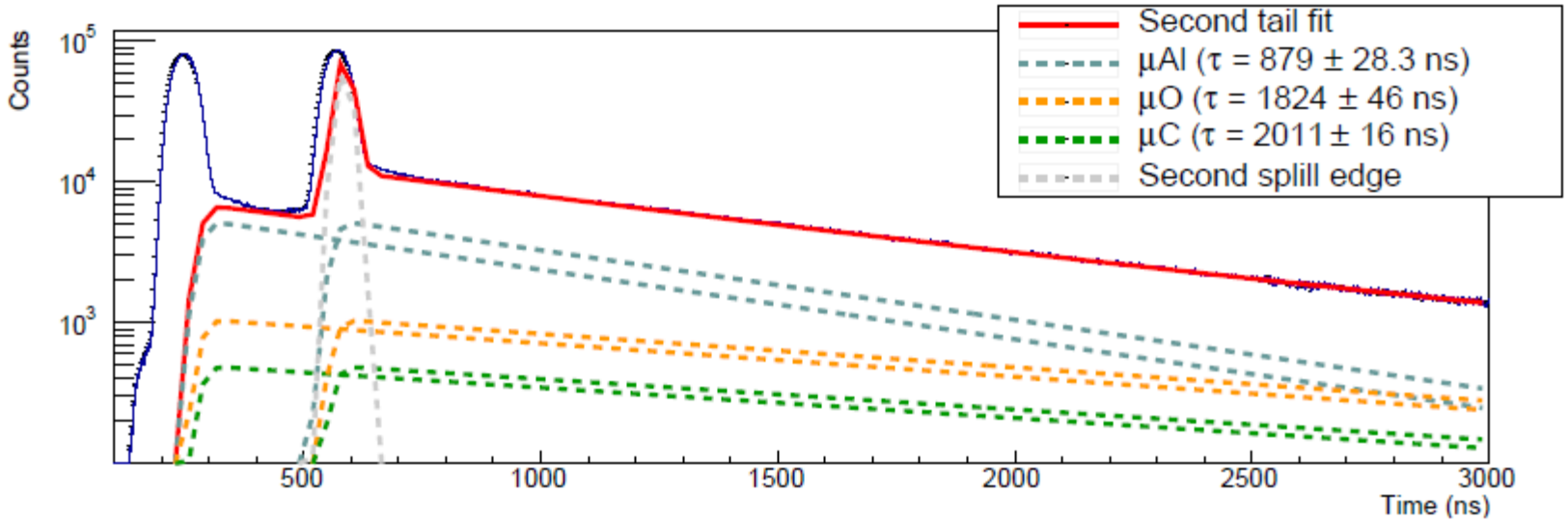

Time distribution of events for the H_2+ 4% CO_2 target (LaBr$_3$ detectors)

	This work (ns)	Suzuki et al. (ns)
μC	2011 ± 16	2026 ± 1.5
μp	2141 ± 98	2194.53 ± 0.11
μAl	879 ± 28	864 ± 2
μO	1824 ± 46	1795 ± 2
μAr	564 ± 14	537 ± 32

- ***Starting with the simplest target (graphite block) , the tails of the time spectrum have been fitted with a gaussian convoluted with a decaying exp function → lifetimes τ of various muonic atoms***

Transfer rate

By studying the differences between

- the time distribution of prompt events, represented by X-rays originating from μAl atoms formed in the vessel and the delayed X-rays emitted by μO(Ar) atoms

it was possible to measure the muon transfer rate from hydrogen to oxygen (argon). Firm numbers need better evaluation of systematics

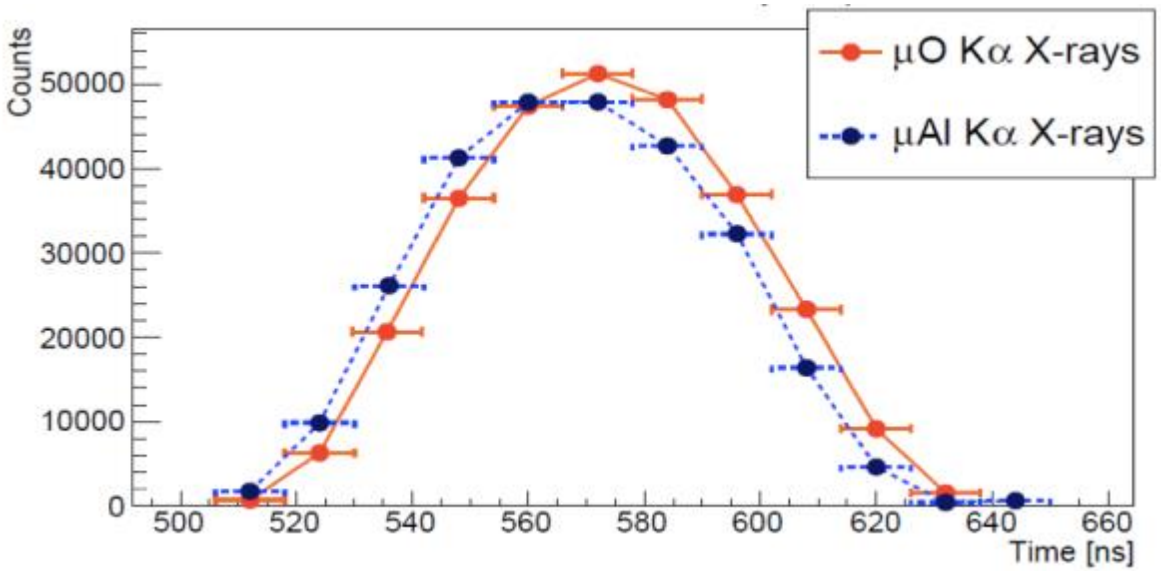

Time difference between prompt signal (Aluminium X-rays) and delayed signal (Oxygen X-rays).

Further steps towards the final setup

- ❑ *Under development at ELETTRA (Ts) . Main addition pump laser and optical cavity*
- ❖ *Required a tunable infrared laser source:*
  - *Wavelength ~6780 nm*
  - *Line width < 0.07 nm*
  - *Tunability ~0.007 nm*
  - *Repetition rate 50 Hz*

→Q-switched single frequency Nd-Yag laser (1064 nm) and a narrowband Cr:Forsterite laser operating at 1260 nm, pumped by another YAG laser (L. Stoychev, EOSAM 14)

- ❖ *Cavity for reflection of laser beam inside the μ stop volume*

Nonlinear crystals studied: $AgGaS_2$ & LiInS2

single pass scheme

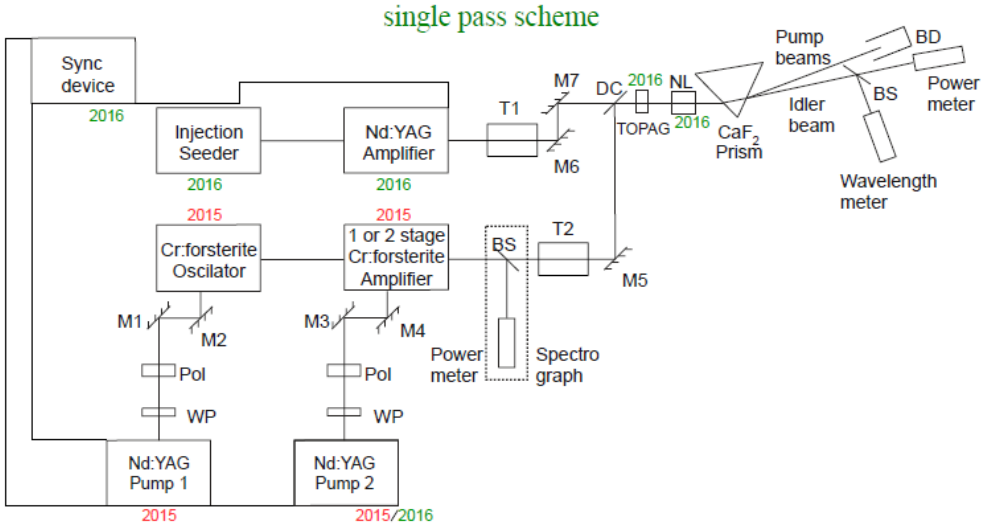

47

WP - waveplate, Pol - polarizer, M1-M7 - mirrors, T1 andT2 - matching telescopes, BS - beamsplitters, DC - dichroic mirror, NL - nonlinear crystal

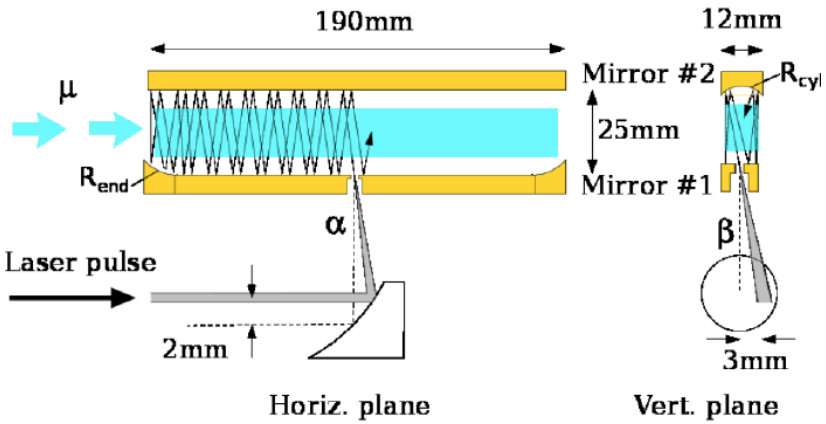

Conclusions

- *The FAMU Collaboration (Elettra, INFN Bo, Mi, MIB, PV, RM3, Ts, Polish Academy of Science, INRNE Sofia, RIKEN-RAL, …) has just demonstrated the feasibilty of the method to measure HFS in muonic atoms*
- *The high-power 6.1 μm laser is under development, while the optical cavity is under study*
- *data taken in 2014 run have been fully analyzed and published, while data taken in 2015-16 are still under study*
- *We are preparing the 2017-18 run for the measurement of the Zemach radius of proton*

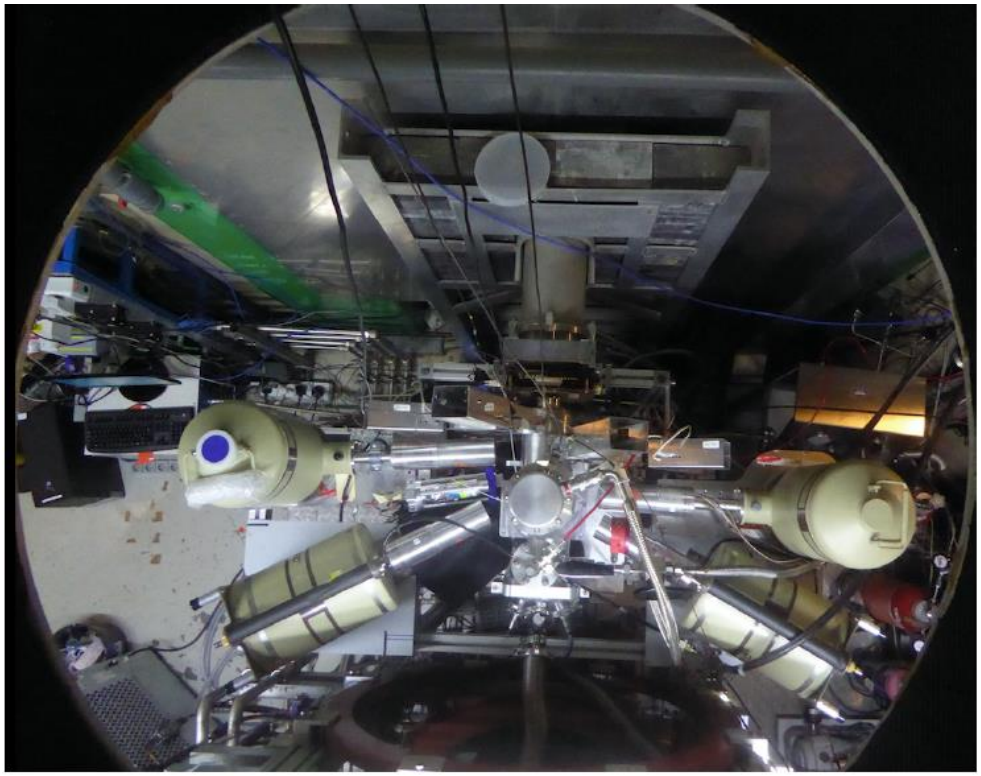

Backup material

Target assembly with LaBr & HPGe detectors

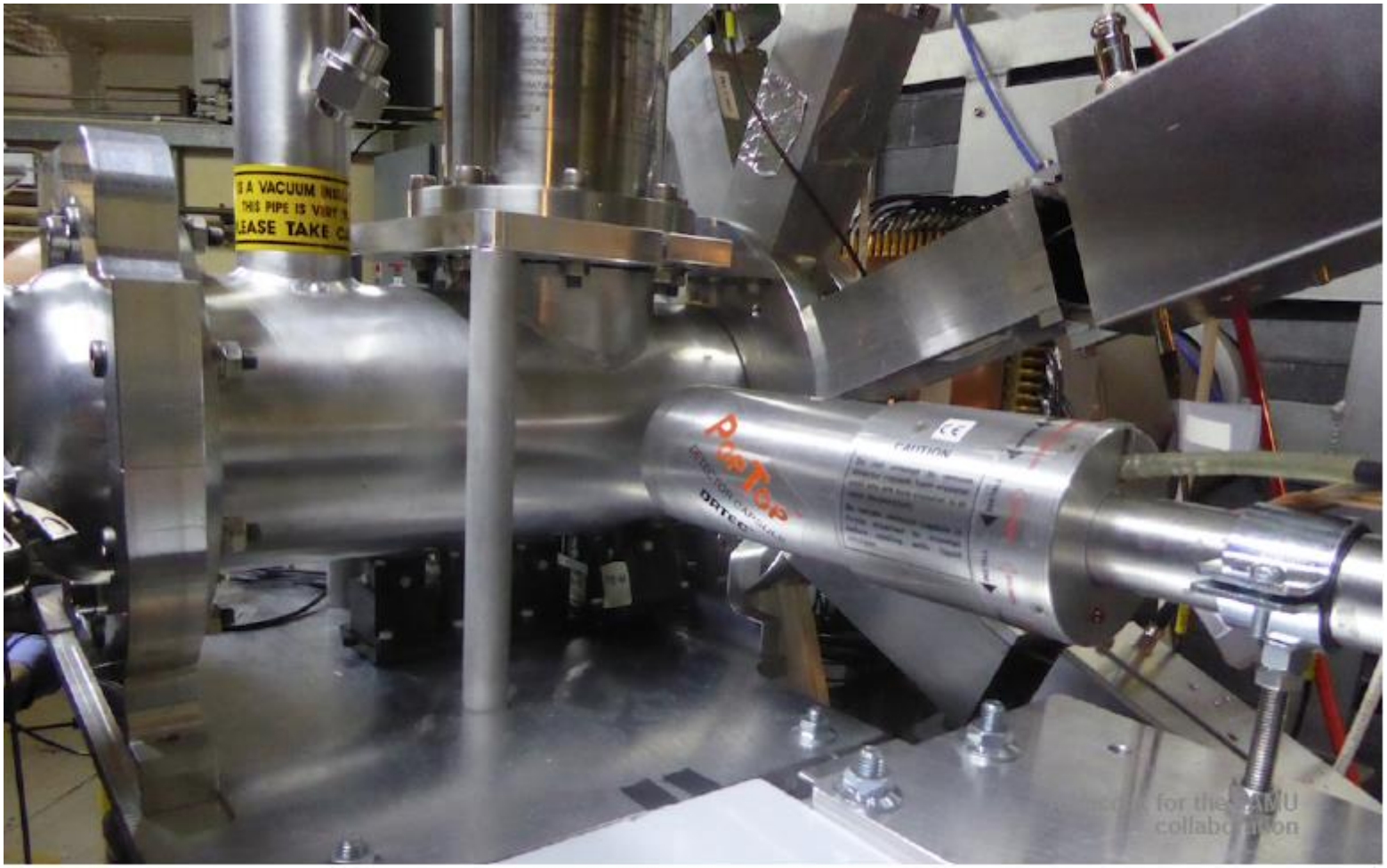

Stimulated spin flip probability

- The probability P for the laser radiation to stimulate a hyperfine para-to-ortho transition is given by:

$$P = \frac{2 \cdot 10^{-5} \cdot W}{(1-R) \cdot S \cdot \sqrt{T}}$$

with	W=energy of laser pulse	5 mJ
	S= laser beam cross section	1 cm^2
	T=target temperature	70K
	R=reflectivity of the cavity	0.995

- With these parameters P will reach 20%

Graphite target

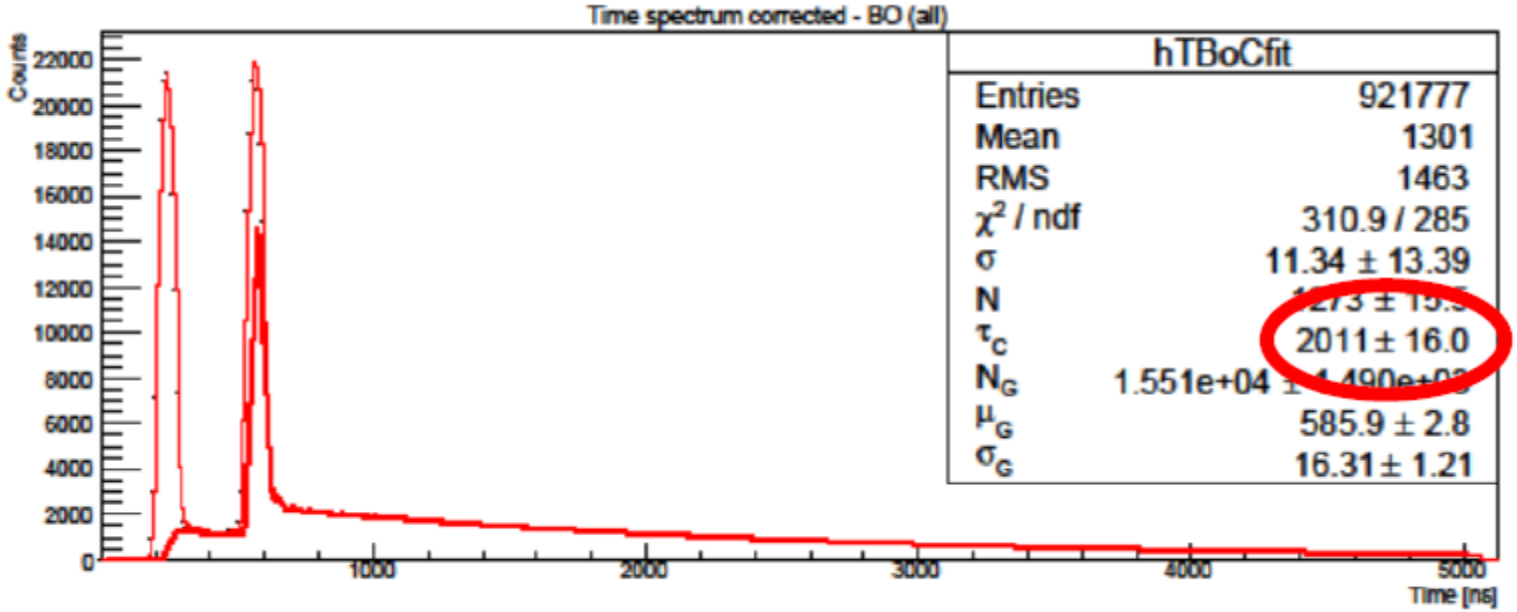

Reference: τ_C = 2026.3 ± 1.5 ns

T. Suzuki, D. F. Measday, and J. P. Roalsvig, "Total nuclear capture rates for negative muons", Phys. Rev. C35/6, 2212-2224, 1987.

Measured: τ_C = 2011 ± 16 ns

μ transfer rate to Oxygen

Oxygen concentration

$$dN_{\mu p} = S(t)dt - N_{\mu p}\lambda_{dec}dt - N_{\mu p}c_O\lambda_{pO}dt$$

muon source muon decay muon transfer to Oxygen

$$dN_{\mu O} = N_{\mu p}c_O\lambda_{pO}dt$$

$\lambda_{dec} = 2141$ ns $c_O = 0.0025$ (atomic concentration)

$S(t) = K\, I^{Al}_{K\alpha}(t)$ spill profile given by Aluminium X-rays prompt emission

Expected μ transfer rates

Oxygen:

$\lambda_{pO} = 85 \pm 2\ ns^{-1}$ thermic

$\lambda^*_{pO} = 390\ ^{+5}_{-13}\ ns^{-1}$ epithermic (0.12 – 0.22 eV)

A. Werthmüller et al., "Energy dependence of the charge exchange reaction from muonic hydrogen to oxygen", Hyperfine Interactions 116, 1998.

Argon:

$\lambda_{pAr} = 163 \pm 9\ ns^{-1}$ thermic

R. Jacot-Guillarmod et al., "Muon transfer from thermalized muonic hydrogen isotopes to argon", Pyhs. Rev. A55/5, 1997.