Study of QCD radiation in top quark pair events.

4th annual Large Hadron Collider Physics conference.

June 16, 2016

Christoph Eckardt

On behalf of the ATLAS and CMS collaborations

Motivation.

- Most top events have additional jets at LHC energies
- Need to have good background estimation of $t\bar{t}$ with additional jets
- Improve modelling of QCD radiation in generators and reduce MC modelling uncertainties
  - Tuning of fixed order NLO calculations to ISR/FSR
  - Matching and merging in modern generators (additional jets are generated @ NLO)

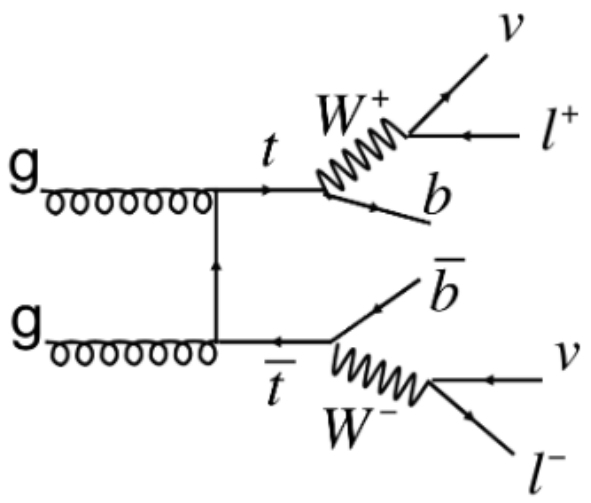

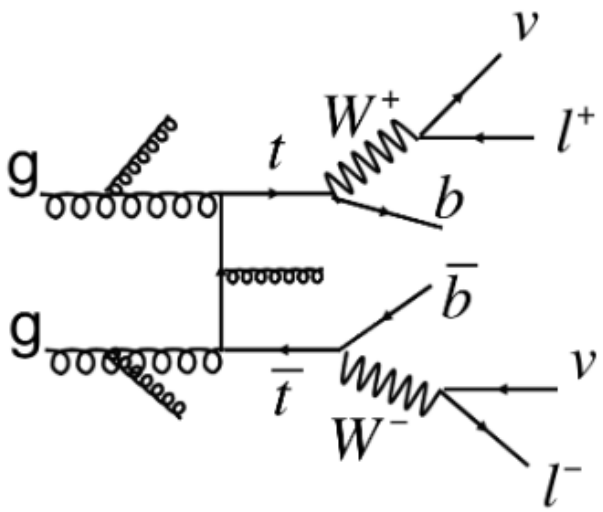

Recent results.

Jet multiplicity measurements:

- ℓ+jets @ 13 TeV - CMS-PAS-TOP-16-008
- Dilepton @ 13 TeV - ATLAS-CONF-2015-065
- Dilepton @ 13 TeV - CMS-PAS-TOP-16-011
- **eμ @ 8 TeV - paper in preparation** NEW
- Dilepton @ 8 TeV - CMS-PAS-TOP-12-041

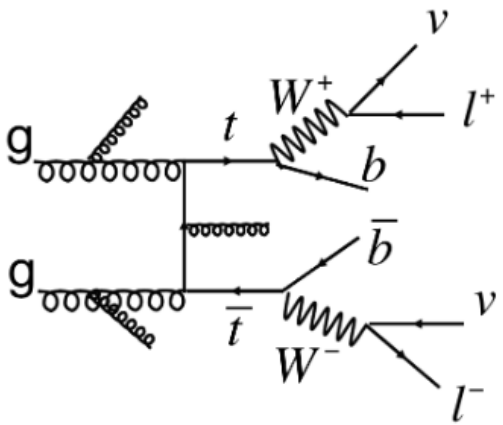

Gap fraction measurements:

- $e\mu$ @ 8 TeV - ATLAS-TOPQ-2015-04
- Dilepton @ 8 TeV - CMS-PAS-TOP-12-041

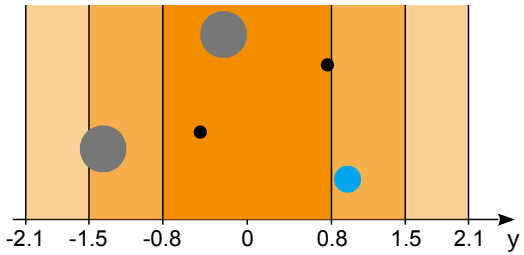

$t\bar{t}$ + heavy flavor:

- Dilepton @ 8 TeV - CMS-PAS-TOP-12-041
- ℓ+jets @ 8 TeV - CMS-PAS-TOP-13-016
- ℓ+jets @ 8 TeV - Eur.Phys.J.C(2016)76:11
- ℓ+jets @ 8 TeV - Phys.Lett.B746(2015)132 (not covered)

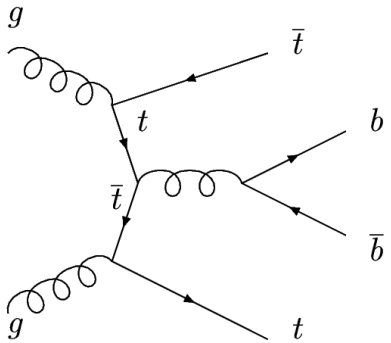

Other:

- $t\bar{t}$ + X (μ+jets) @ 13 TeV - CMS-PAS-TOP-15-017 (not covered)
- Jet Pull Angle (ℓ+jets) @ 8 TeV - PLB 750 (2015) 475-493 (not covered)
- Comparisons of theory predictions @ 8 TeV - CMS-PAS-TOP-15-011 (not covered)

Measurement strategies.

Fiducial phase space

- Matches closely the phase space of the detector
- Detector response corrections (resolution & efficiency)

Particle level

- Based on final state particles at generator level
- Electrons and muons: prompt, origin not from a hadron decay
- Neutrinos: origin not from a hadron decay
- Jets: Clustering of all stable final state particles
- b-jets: Matching jets to b-hadrons (ghost matching)

- Smaller model dependence and no extrapolation needed compared to full phase space and parton level

Jet multiplicity measurements.

- Differential cross-section as a function of jet multiplicity unfolded at particle level
- Sensitive to the production mechanism of additional jets
- Probing p_{T} dependence of the hard emission via different p_{T} thresholds
- Anti-k_{T} jets with a radius of 0.4 are used (except CMS @ 8 TeV $\rightarrow$ R=0.5)

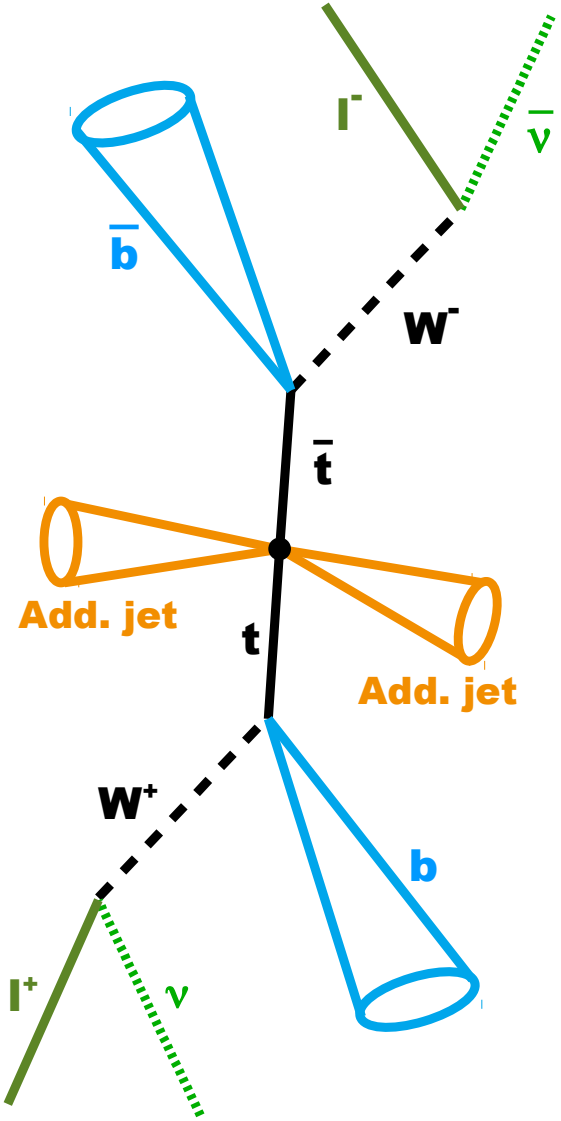

Jet multiplicity at 13 TeV.

- Different phase spaces:

Leptons:	$p_T > 25$ GeV & $\lvert\eta\rvert < 2.5$	Leptons:	$p_T > 20$ GeV & $\lvert\eta\rvert < 2.4$
b-jets:	$p_T > 25$ GeV & $\lvert\eta\rvert < 2.5$	Jets:	$p_T > 30$ GeV & $\lvert\eta\rvert < 2.4$
Add. jets:	$p_T > 25$ GeV & $\lvert\eta\rvert < 2.5$	Add. jets:	$p_T > 20$ GeV & $\lvert\eta\rvert < 2.4$

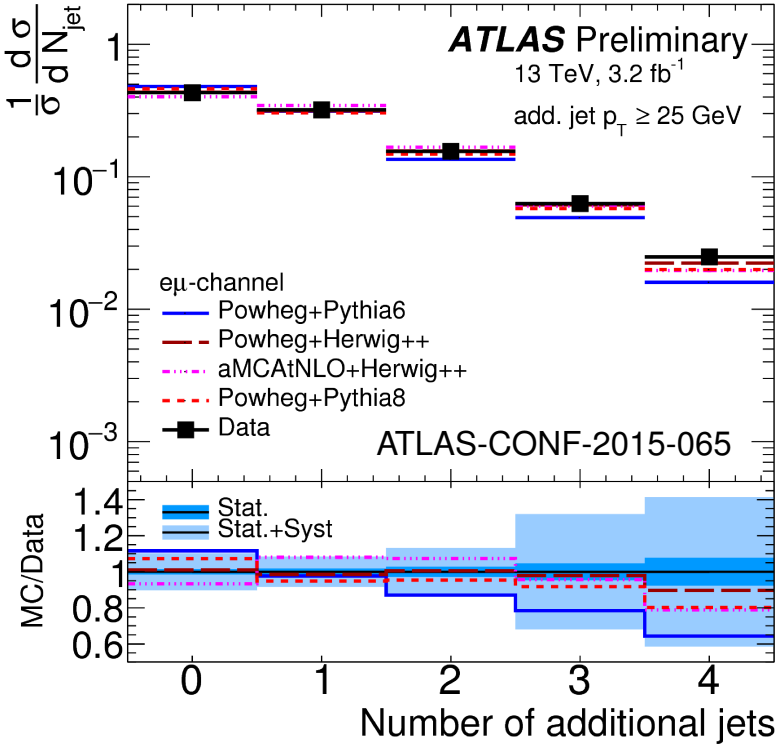

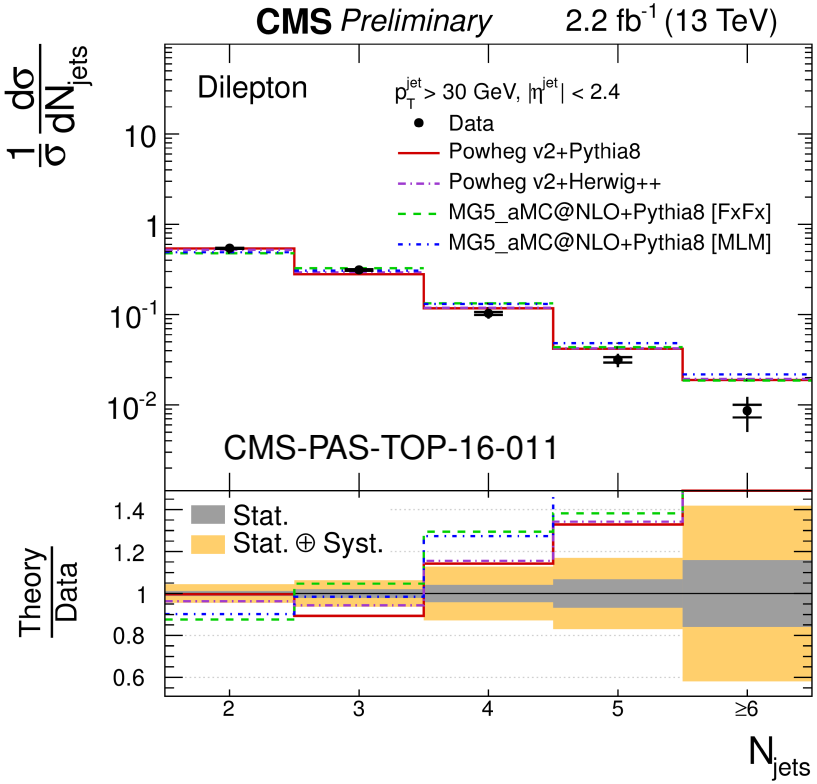

- Different versions & tunes for predictions $\rightarrow$ Need to have comparable results
- Large uncertainties 5-40% (jet energy scale (JES) is dominant part)
- Add. jets from parton shower $\rightarrow$ Tuning is important

Jet multiplicity at 13 TeV vs. 8 TeV.

dilepton, $\geq$ 2 b-jets

- η region: $|\eta| < 2.5$ $|\eta| < 4.5$
- 13 TeV measurement uses Powheg+Pythia6 with $h_{\text{damp}} = m_t$

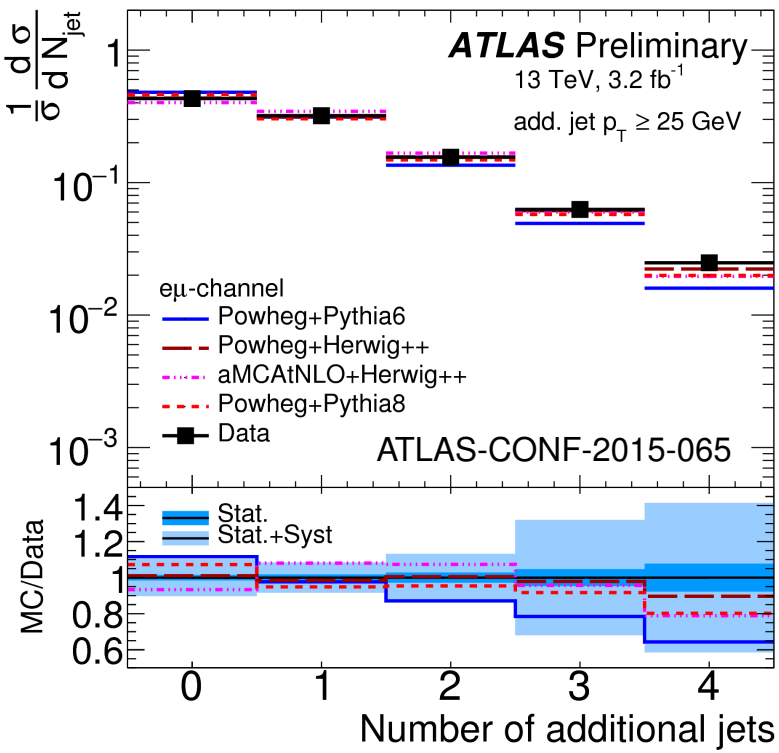

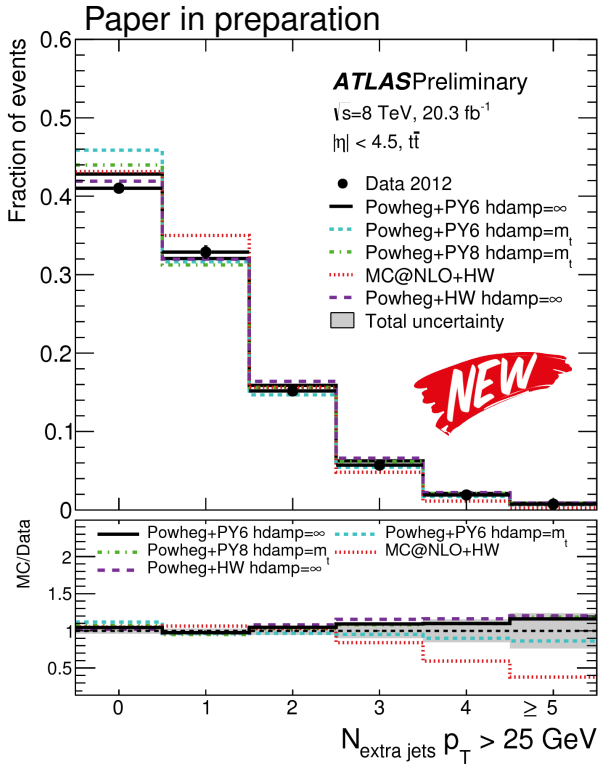

- Uncertainties up to 20% @ 8 TeV (Data statistics and JES)
- Consistent results with 8 TeV measurement
- Powheg with Pythia8 or with Herwig++ perform reasonably well at both $\sqrt{s}$

Jet multiplicity at 13 TeV.

lepton+jets vs. dilepton, $\geq$ 2 b-jets

- Comparison to lepton+jets analysis at 13 TeV
- Differential cross section:

Absolute

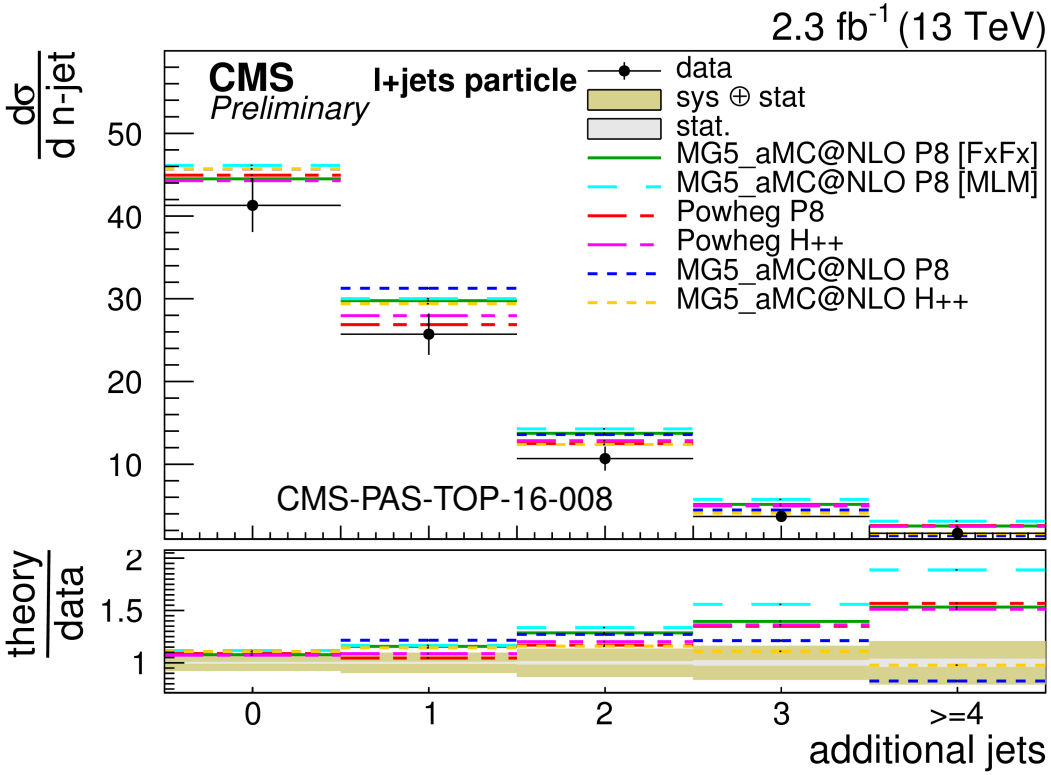

Normalized

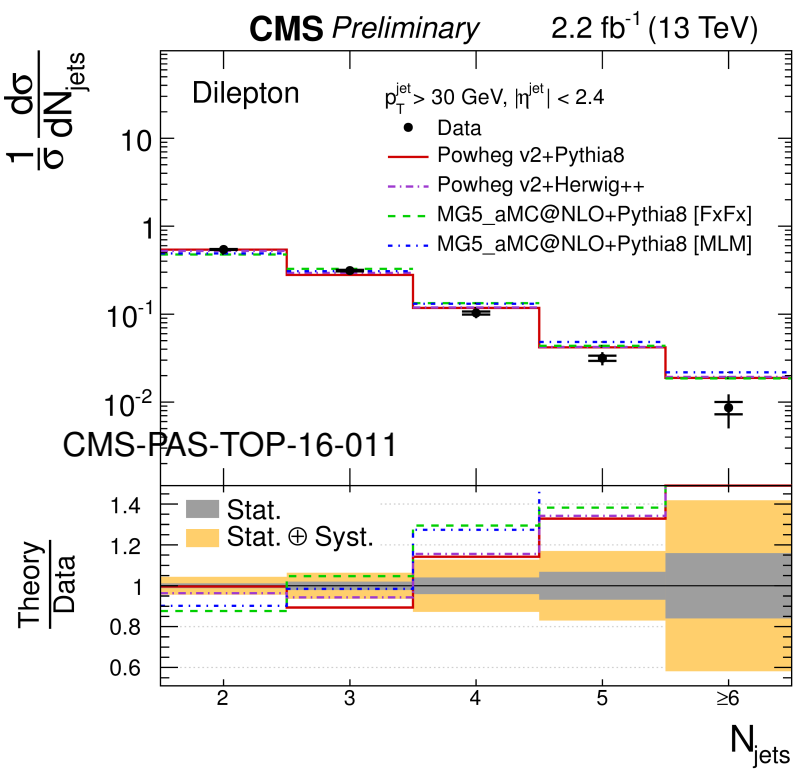

- Similar trend towards too many predicted additional jets in both analyses

Gap fraction measurement.

Definition

$$f(p_T) = \frac{N(p_T)}{N_{\text{total}}}$$

- $N(p_T)$: number of events with no additional jet above a p_T threshold within the (pseudo-)rapidity interval (veto region)
- N_{total}: total number of selected events

- Sensitive to the leading p_{T} emission accompanying the $\text{t}\bar{\text{t}}$ system
- Inclusive measurement, which allows an insight to the parton showering
- Measured for different veto regions (e.g. $|y| < 0.8$)

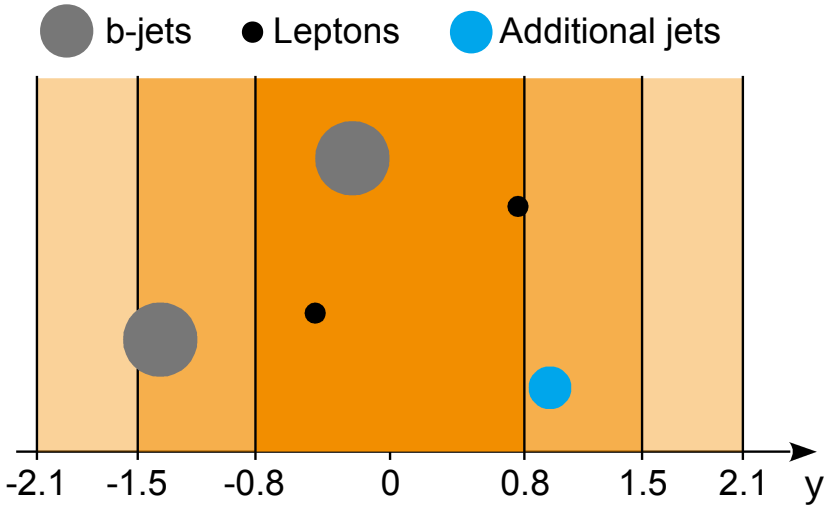

Gap fraction at 8 TeV.

dilepton, $\geq$ 2 b-jets

- Veto region: $|y| < 0.8$ $|\eta| < 0.8$
- Anti-k_T jet: $R = 0.4$ $R = 0.5$

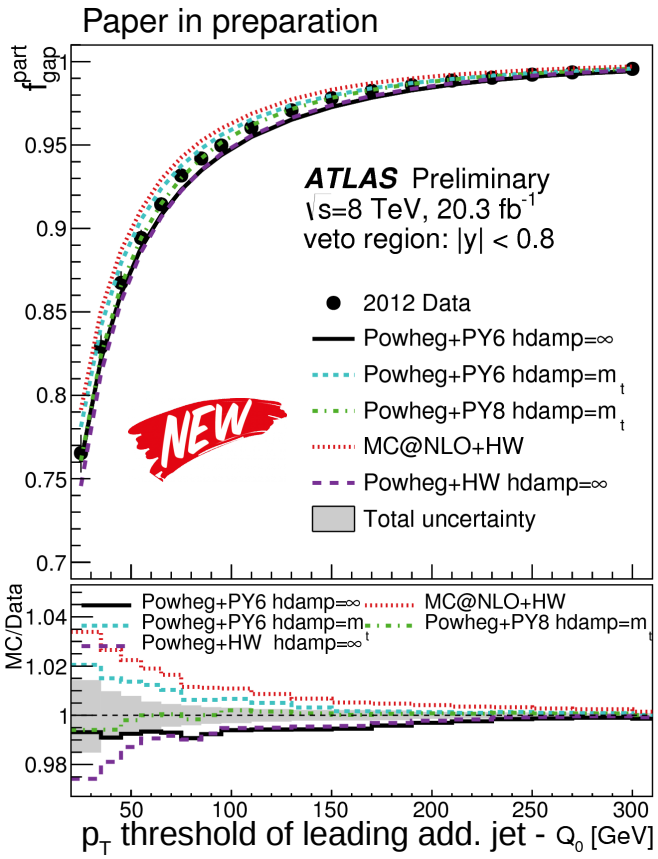

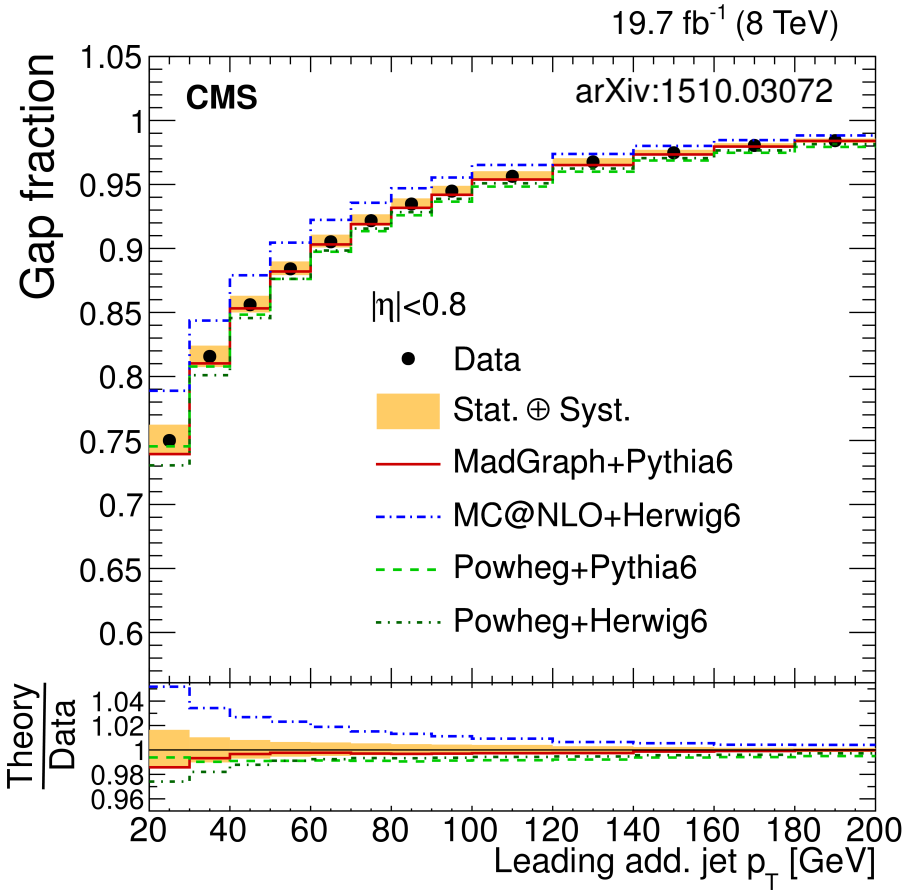

- Overall nice consistency between results
- Up to 1.5% uncertainty (again JES is dominant)
- Generator agreement is comparable (even with different tunes)

Measurement of $t\bar{t}$ + heavy flavor.

- Measurement of ratio $t\bar{t}$+$b\bar{b}$/$t\bar{t}$+jj at parton level
  - Irreducible background for $t\bar{t}H$ ($H \to b\bar{b}$) analysis $\Rightarrow$ Constrain $g \to b\bar{b}$ fragmentation
- Jet flavor at generator level defined by:
  - Flavor of leading quark (hardB) $\rightarrow$ parton level
  - Presence of a B-hadron in the list of jet constituents (hadronB) $\rightarrow$ particle level
- Caveat: different phase spaces used $\rightarrow$ Only separate comparisons

CMS-PAS-TOP-13-016	$\sigma_{t\bar{t}b\bar{b}}/\sigma_{t\bar{t}jj}$
hardB:	
this analysis	$0.012 \pm 34\%$
theory NLO[4] JHEP 1407 (2014)135	$0.011\ ^{+39\%}_{-13\%}$
MADGRAPH +PYTHIA	$0.007 \pm 10\%$
hadronB:	
this analysis	$0.015 \pm 32\%$
CMS dilepton[3] CMS-PAS-TOP-13-010	$0.022 \pm 29\%$
MADGRAPH +PYTHIA	$0.009 \pm 14\%$

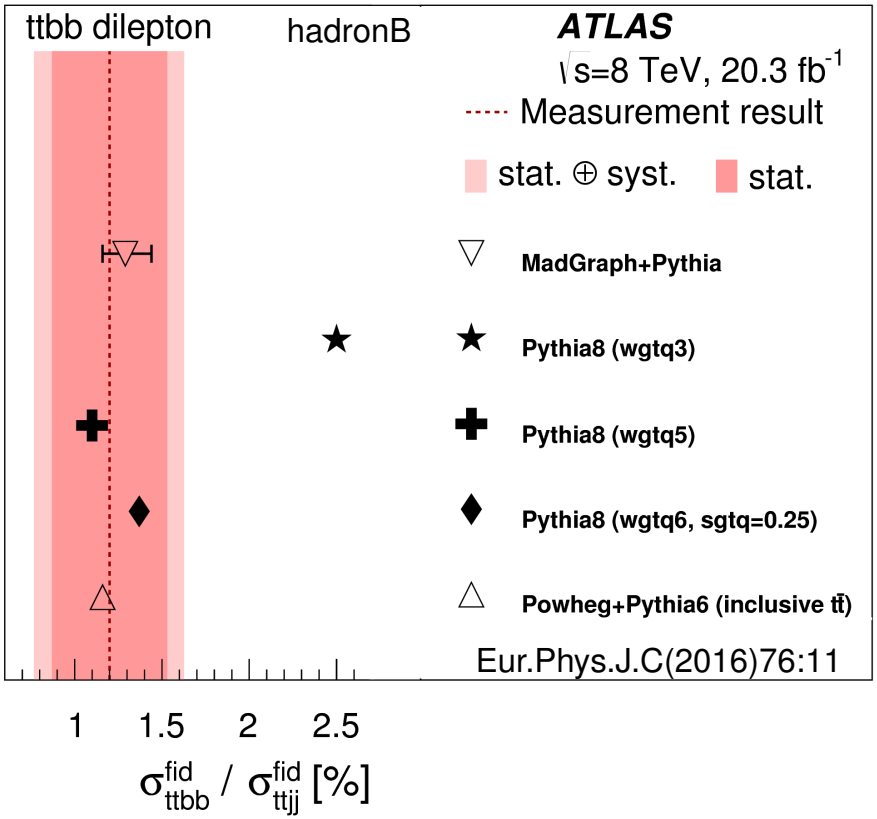

- Uncertainties are statistics dominated
- Systematics mostly from b-tagging and JES

Fiducial cross section of $t\bar{t}$ + b(b).

- Test of NLO QCD calculations of $t\bar{t}$ + b(b)
- QCD-only results: $t\bar{t}$V/H prediction is subtracted (simulation)
- aMC@NLO with two different functional forms for renormalization & factorization scales
- Pythia8 calculations with three different options for the g→$b\bar{b}$ splitting

Eur.Phys.J.C(2016)76:11

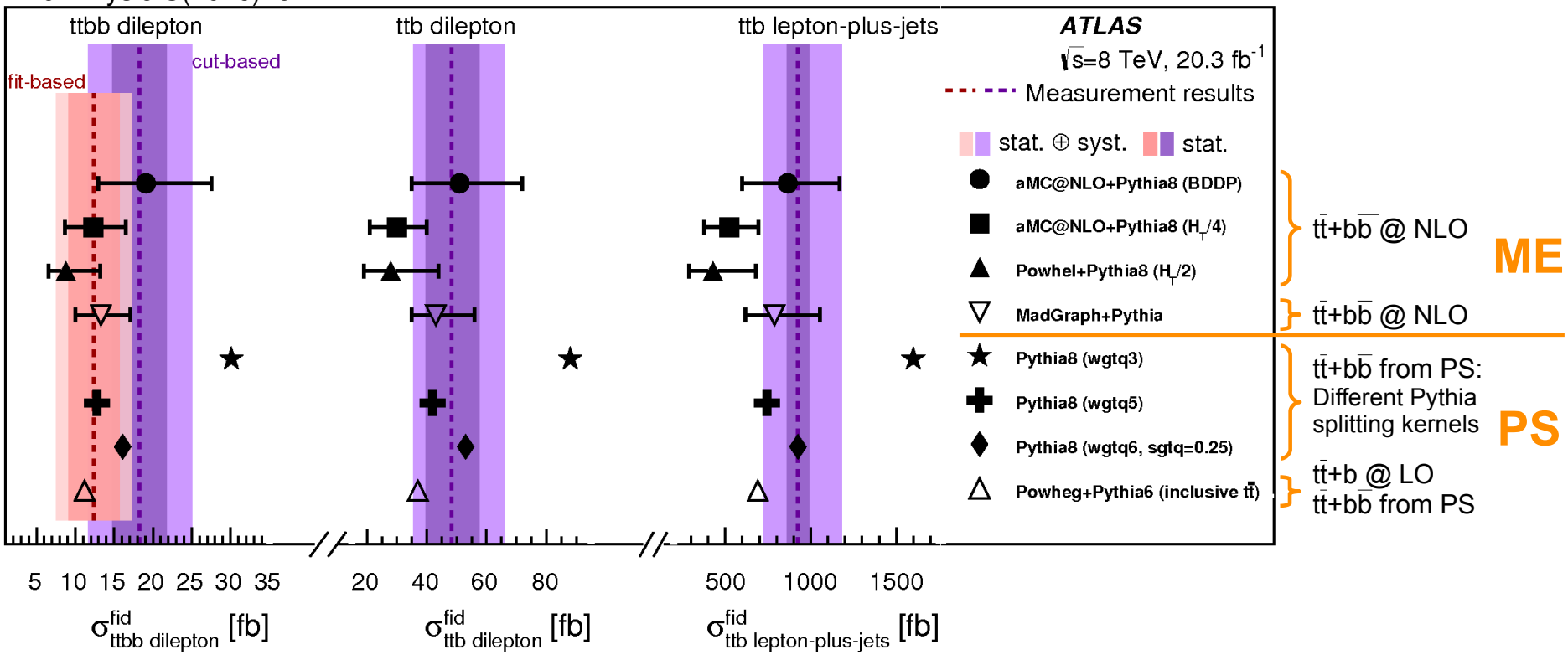

Conclusion.

- Consistent results between 8 and 13 TeV measurements
- Many different kinematic regions related to QCD radiation in top pair events have been measured
- Results show discrimination power between MC models and tuning parameters
  $\rightarrow$ Important input for top pair modelling at 13 TeV
- Need to move to NLO generators for higher jet multiplicities, where the emission of additional jets is not dependent on the tuning

Backup.

Tuning of α_S.

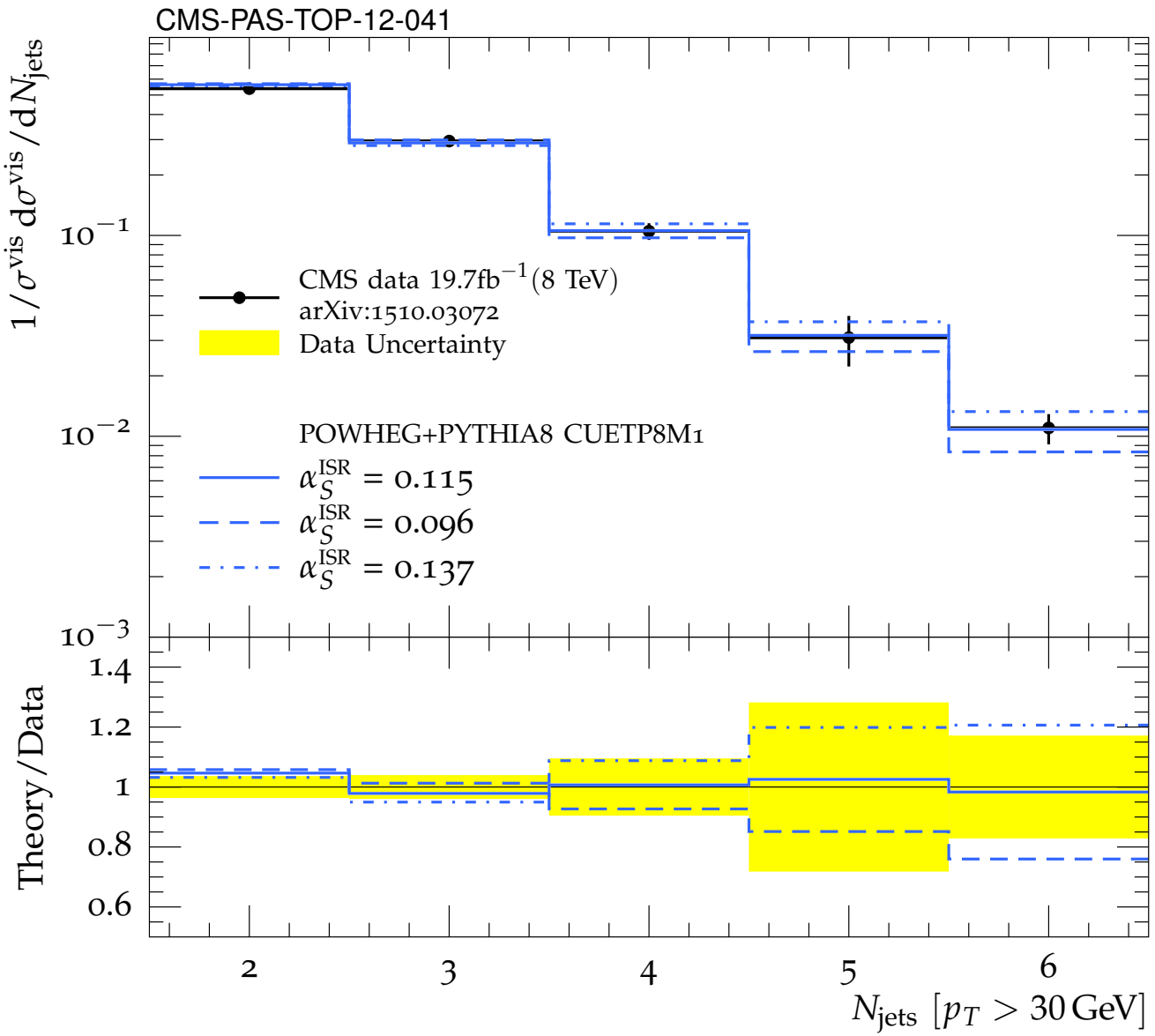

p_T of additional b-jets.