Science & Technology Facilities Council
10 Years of Impact and Inspiration

Tuneable permanent magnets: Power saving solutions for the next generation of high energy accelerators.

Alex Bainbridge, Ben Shepherd, Norbert Collomb, Jim Clarke.

STFC Daresbury Laboratory, UK

Michele Modena, **CERN**

Motivation - CLIC

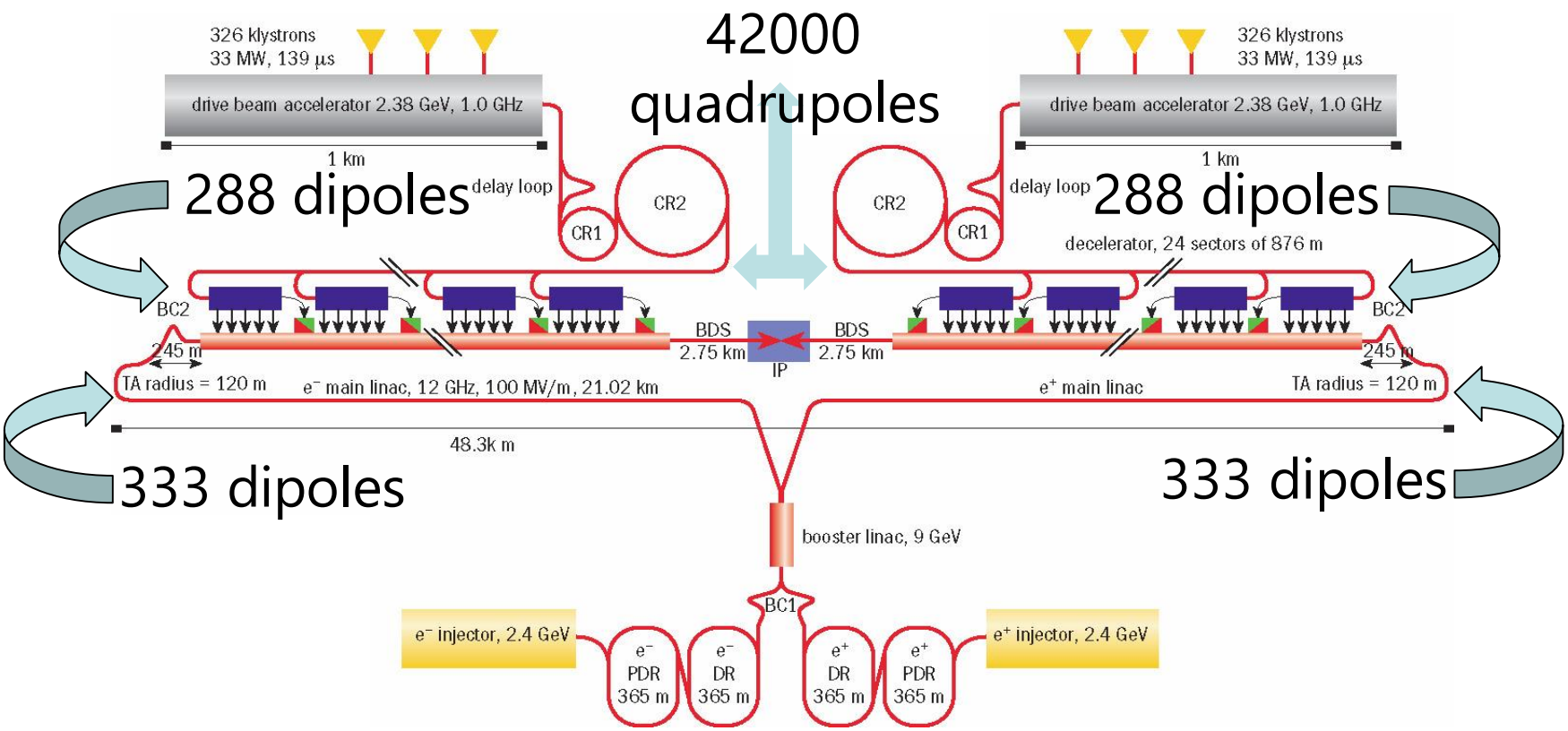

Science & Technology Facilities Council
10 Years of Impact and Inspiration

Motivation - CLIC

The plan to use normal conducting systems on CLIC will result in high electrical power consumption and running costs.

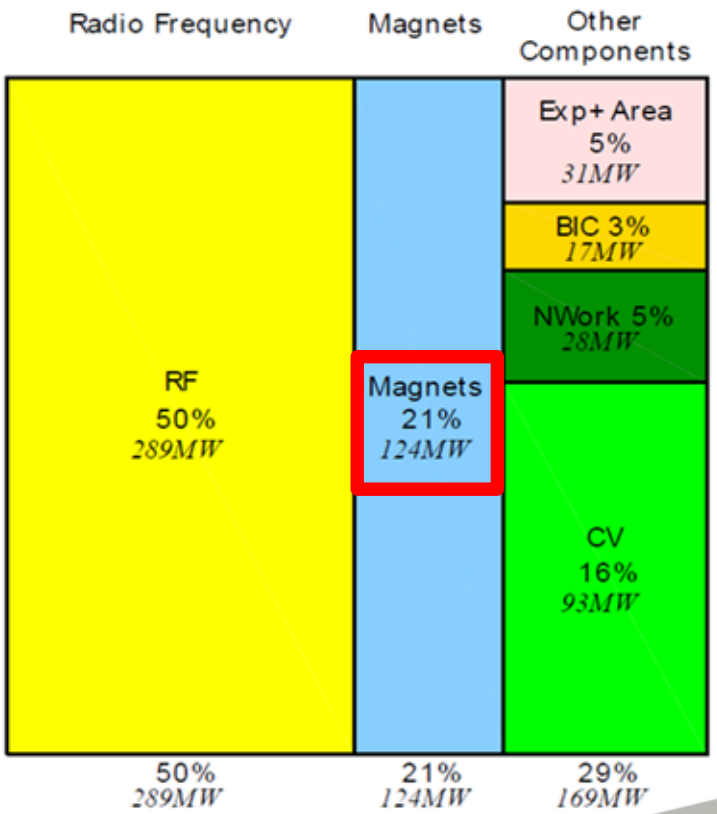

The Challenge

Magnet Type	Number	Length	Strength	Range	0.1% good field	Power/total
Drive Beam Quads	41400	0.2 m	63 T/m	100-10%	26x26 mm	20 MW
Drive Beam Dipoles	576	1.5 m	1.6 T	100-50%	40x40 mm	12.4 MW
Linac Quads	1061	0.5 m	14 T/m	100-10%	80x80 mm	6.3 MW
Linac Quads	1638	0.25 m	17 T/m	100-10%	87x87 mm	10.3 MW
Main Beam Dipoles	666	1.5 m	0.5 T	100%	30x30 mm	2.5 MW
Damping Ring Quads	408	0.4 m	30 T/m	100-20%	80x80 mm	4.7 MW
Damping Ring Quads	408	0.2 m	30 T/m	100-20%	80x80 mm	3.3 MW
Chicane Dipole	184	1.5 m	1.6 T	100-10%	80x80 mm	7.7 MW
Chicane Dipole	236	1 m	0.26 T	100-10%	80x80 mm	1.1 MW

High Energy Quadrupole

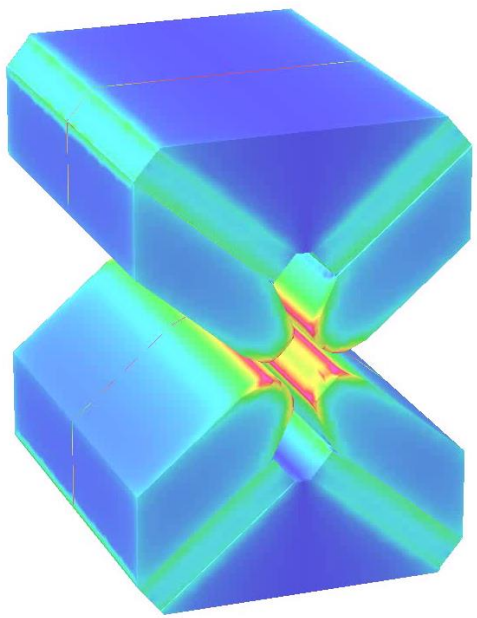

- Max gradient = 60.4 T/m
- Min gradient = 15.0 T/m
- Pole gap = 27.2 mm
- Field quality = $\pm$0.1% over 23 mm
- NdFeB magnets with B_r = 1.37 T (VACODYM 764 TP)
- 4 permanent magnet blocks each 18 x 100 x 230 mm

- *Patent WO 2012046036 A1*

opera simulation software

B.J.A. Shepherd *et al*., "Tunable high-gradient permanent magnet quadrupoles" *Journal of Instrumentation*, vol. 9, no. T11006, November 2014.
doi:10.1088/1748-0221/9/11/T11006

Science & Technology Facilities Council
10 Years of Impact and Inspiration

Low Energy Quadrupole

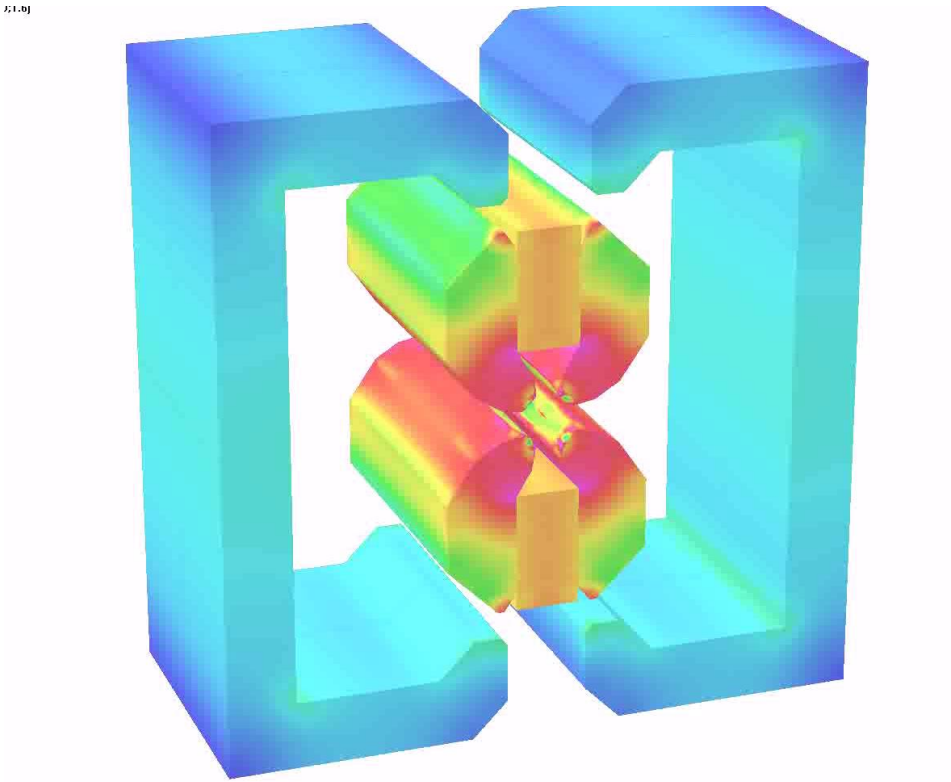

- Max gradient = 43.4 T/m
- Min gradient = 3.5 T/m
- Pole gap = 27.6 mm
- Field quality = $\pm$0.1% over 23 mm
- NdFeB magnets with B_r = 1.37 T (VACODYM 764 TP)
- 2 PM blocks are 37.2 x 70 x 190 mm

B.J.A. Shepherd *et al.*, " Novel Adjustable Permanent Magnet Quadrupoles for the CLIC Drive Beam Decelerator " *IEEE Trans. on Appl. Superconductivity*, vol. 22, no. 3, June 2012.
doi: 10.1109/TASC.2012.2191632

Dipoles-International interest

Interest in storage rings – PM dipoles very useful where only small field strength adjustments are required.

Spring-8 dipoles

Large tuning range designs, high field H-dipole and low field C-dipole

T. Watanabe *et al*., "Permanent magnet based dipole magnets for next generation light sources" Phys. Rev. Accel. Beams 20, 072401, July 2017.
doi:10.1103/PhysRevAccelBeams.20.072401

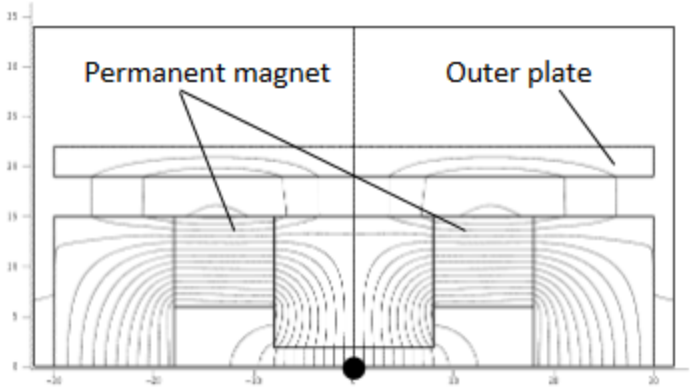

TUPRO092 Proceedings of IPAC'14, Dresden, Germany

Sirius storage ring

Small tuning range but 0.5T and 2T variants

J. Citadini *et al*., "Sirius—A 3 GeV Electron Storage Ring Based on Permanent Magnets" *IEEE Trans. on Appl. Superconductivity*, vol. 22, no. 3, June 2012.
doi: 10.1109/TASC.2012.2185771

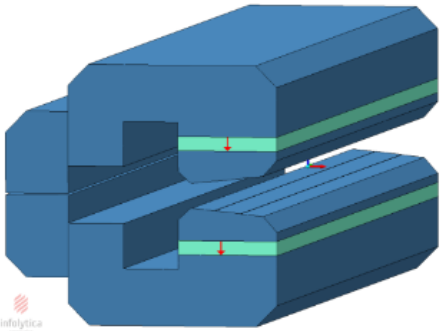

WEPD003 Proceedings of IPAC'10, Kyoto, Japan

Dipole Prototype

- Original plan was to build a 0.5m version of full size DB TAL magnet
  - Not possible within available budget £100,000 (~110,000 EUR)
- So, instead we are building a scaled version
  - Cost dominated by one off PM block costs (>50%)
  - Will still demonstrate the tuneable PM dipole principle as well as achieving the same field quality and the same relative tuning range.

Type	Length (m)	Max Field Strength (T)	Pole Gap (mm)	0.1% good field (integrated)(mm)	Range (%)
DB TAL	**1.5**	**1.6**	**53**	**40 x 40**	**50–100**
Original Prototype	0.5	1.6	53	40 x 40	50–100
Scaled Prototype	0.4	**1.1**	**40**	**30 x 30**	**50–100**

Dipole Prototype

- Settled on C-design that uses a single sliding PM block to adjust field

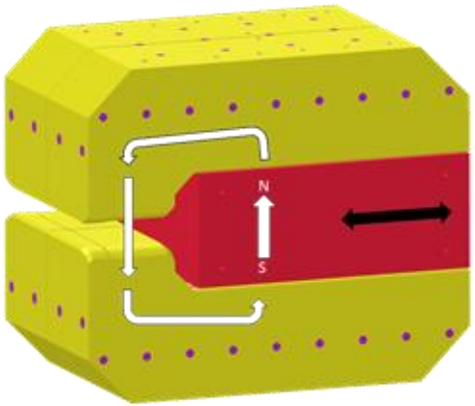

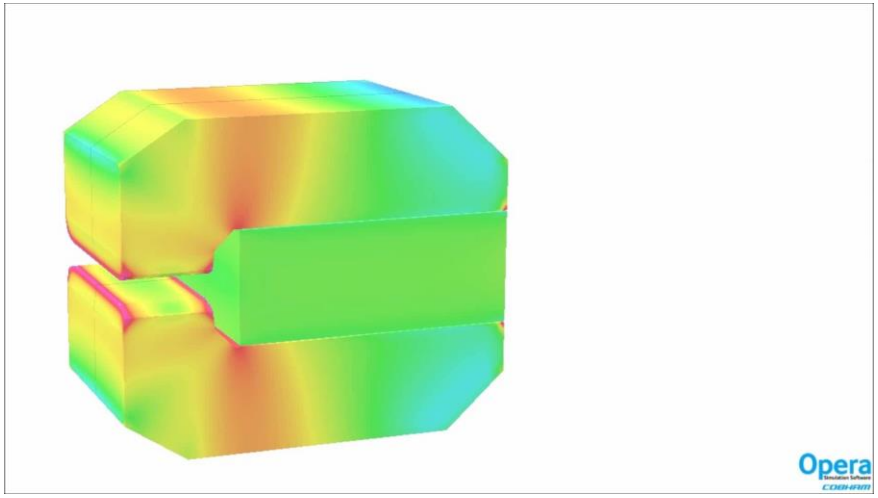

- Advantages:
  - Tunes without changing gap!
  - PM moves perpendicular to largest forces
  - Curved poles possible

Magnet Block

- Magnet block dimensions are **500x400x200 mm**, with 4 holes on 400mm axis for mounting rods.
  - Constructed from 80 individual blocks (each 100x50x100mm) in resin

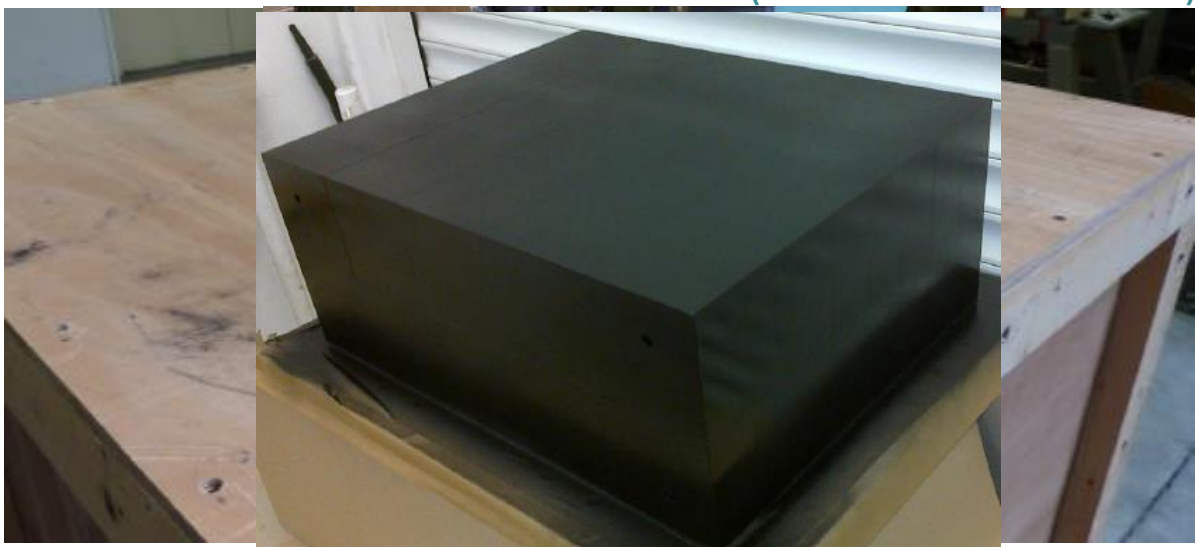

- Manufactured, measured & delivered by Vacuumschmelze
- Magnet material **NdFeB, Vacodym 745TP**
- **Br 1.38T min, 1.41T typical**

Modelling

Magnet simulations performed in OPERA 3D

Mesh deals with small gaps and non-magnetic fasteners

Not component deflection

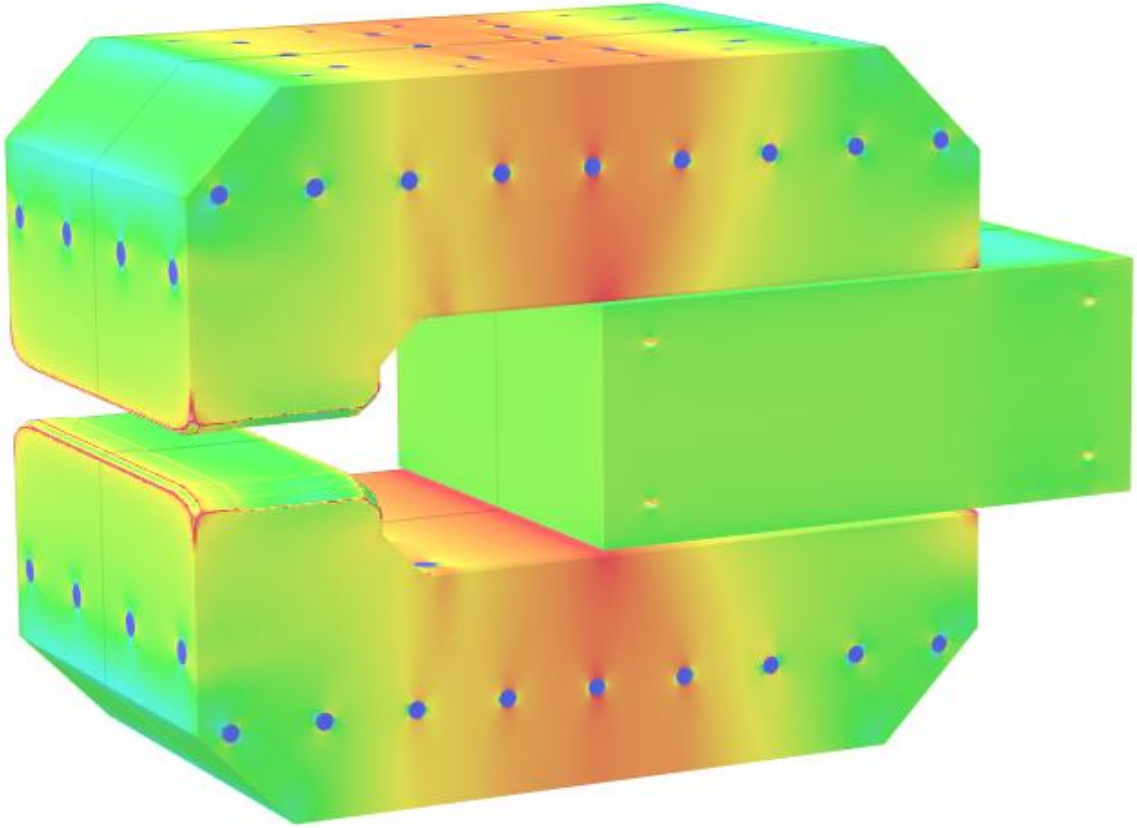

MODEL DATA
Position 150.op3
Magnetostatic (TOSCA)
Nonlinear materials
Simulation No 1 of 1
4202266 elements
2036289 nodes
Nodally interpolated fields
Activated in global coordinates
Reflection in XY plane (Z field=0)
Reflection in ZX plane (Z+X fields=0)

Predicted Flux Density

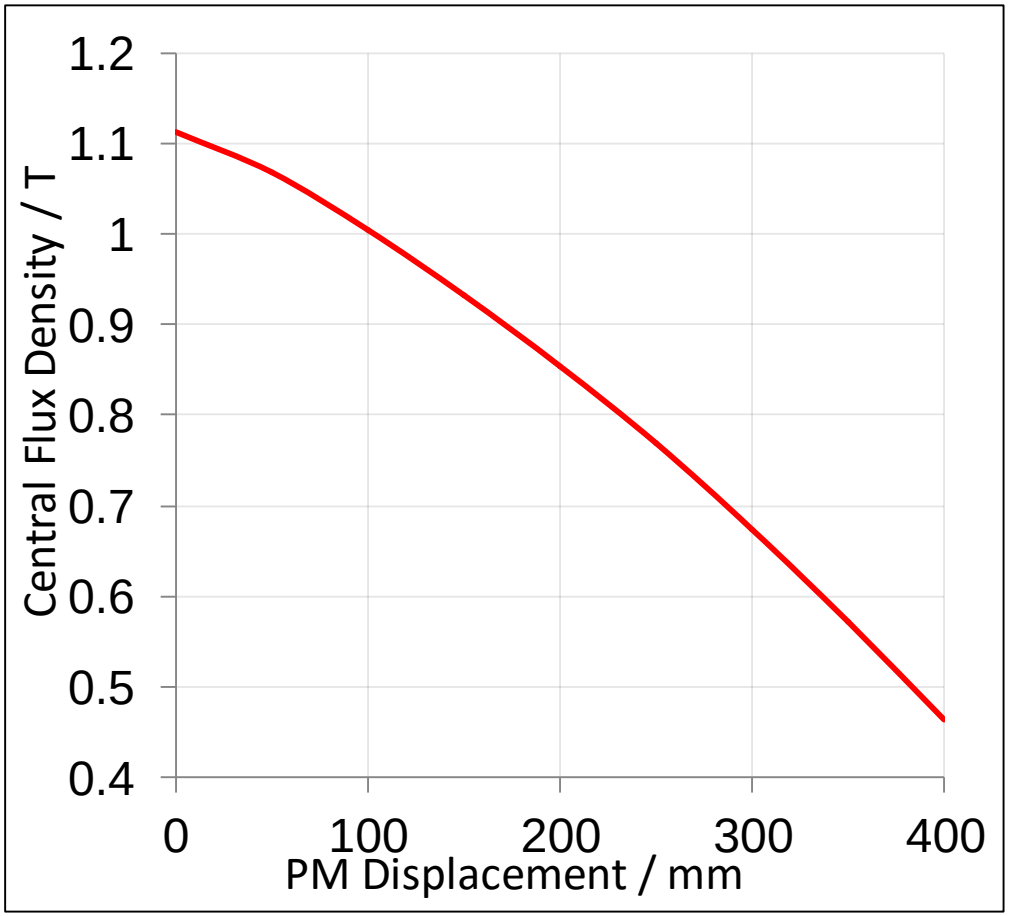

Predicted magnetic flux density at the geometric center of the magnet as a function of block displacement.

OPERA's 2 calculation methods agree to within the width of the fitting line.

50 % tuning mark reached at 355 mm displacement.

Longitudinal Profile

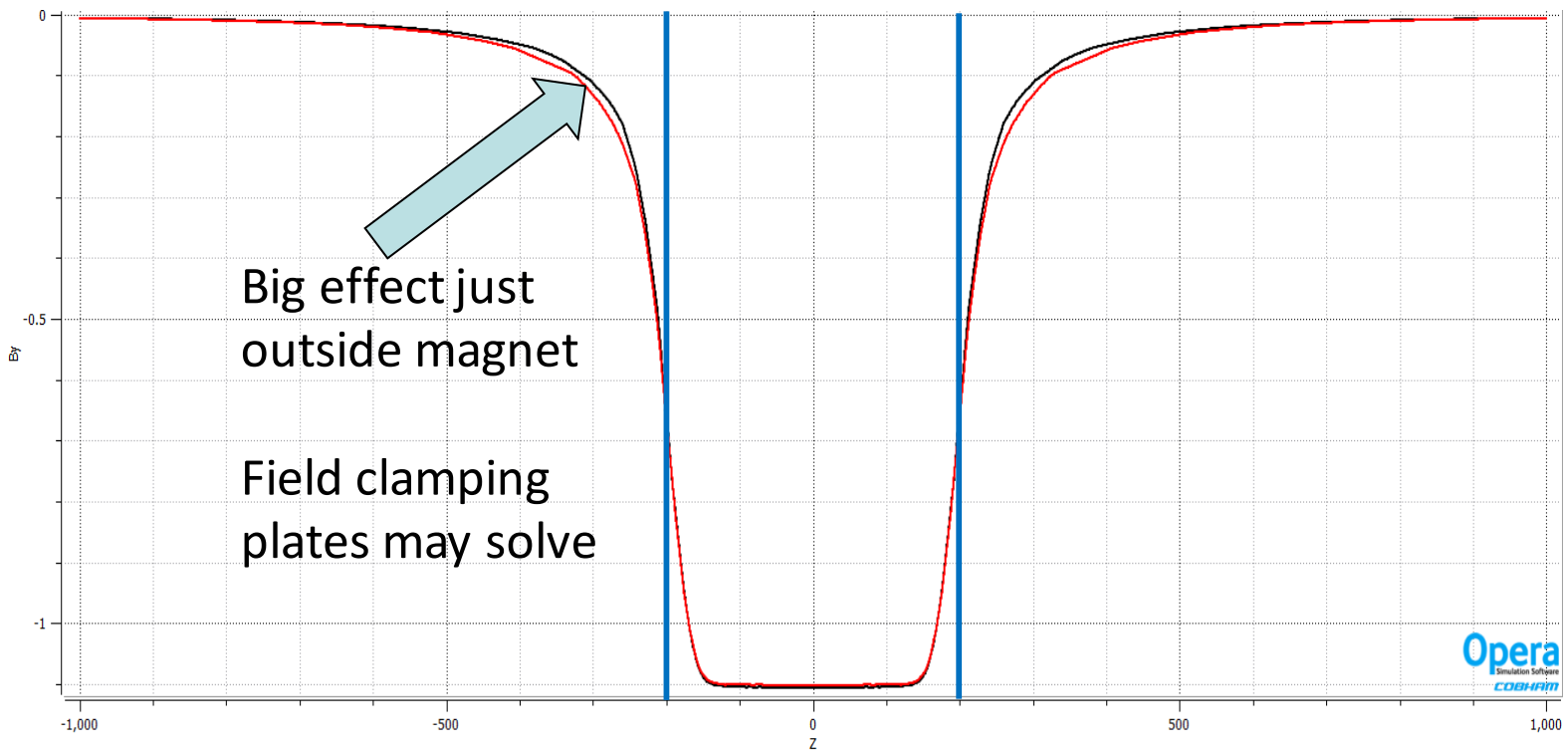

Block affects longitudinal field profile differently at different positions in beam pipe.

Shim Structure

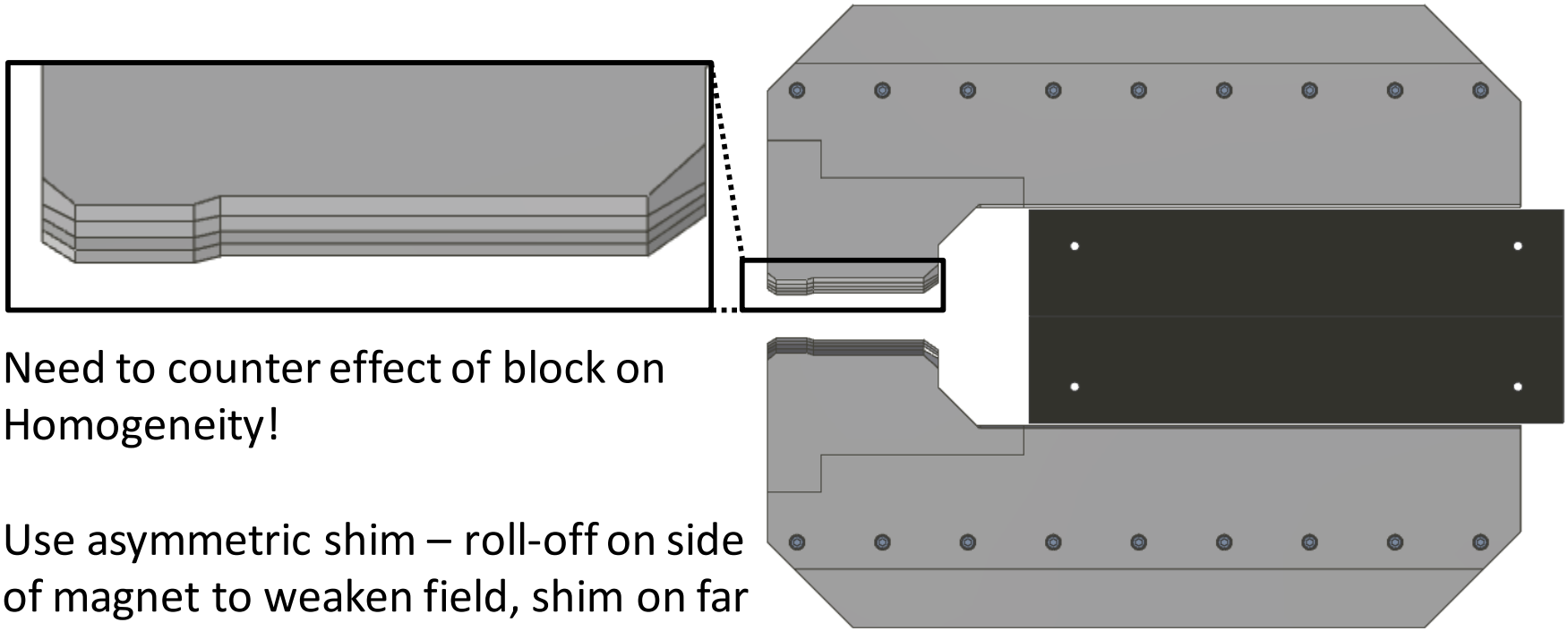

Need to counter effect of block on Homogeneity!

Use asymmetric shim – roll-off on side of magnet to weaken field, shim on far side to strengthen.

Effect on higher harmonics? Likely adds quadrupole effect – rotating coil measurements interesting!

Integrated Homogeneity

The optimised pole design meets the target to 20mm each side of the beam axis.

Balancing pole shape with saturation makes homogeneity relatively independent of PM block position.

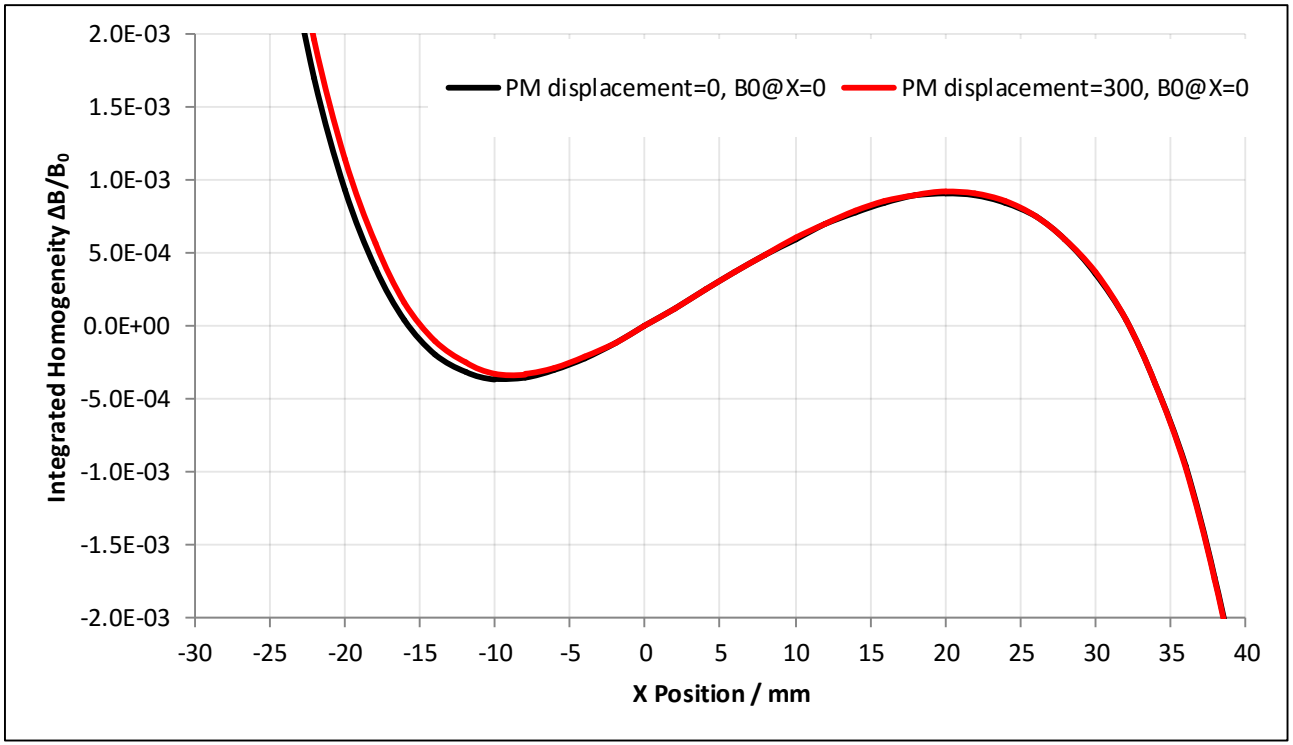

Science & Technology Facilities Council
10 Years of Impact and Inspiration

Magnetic Forces

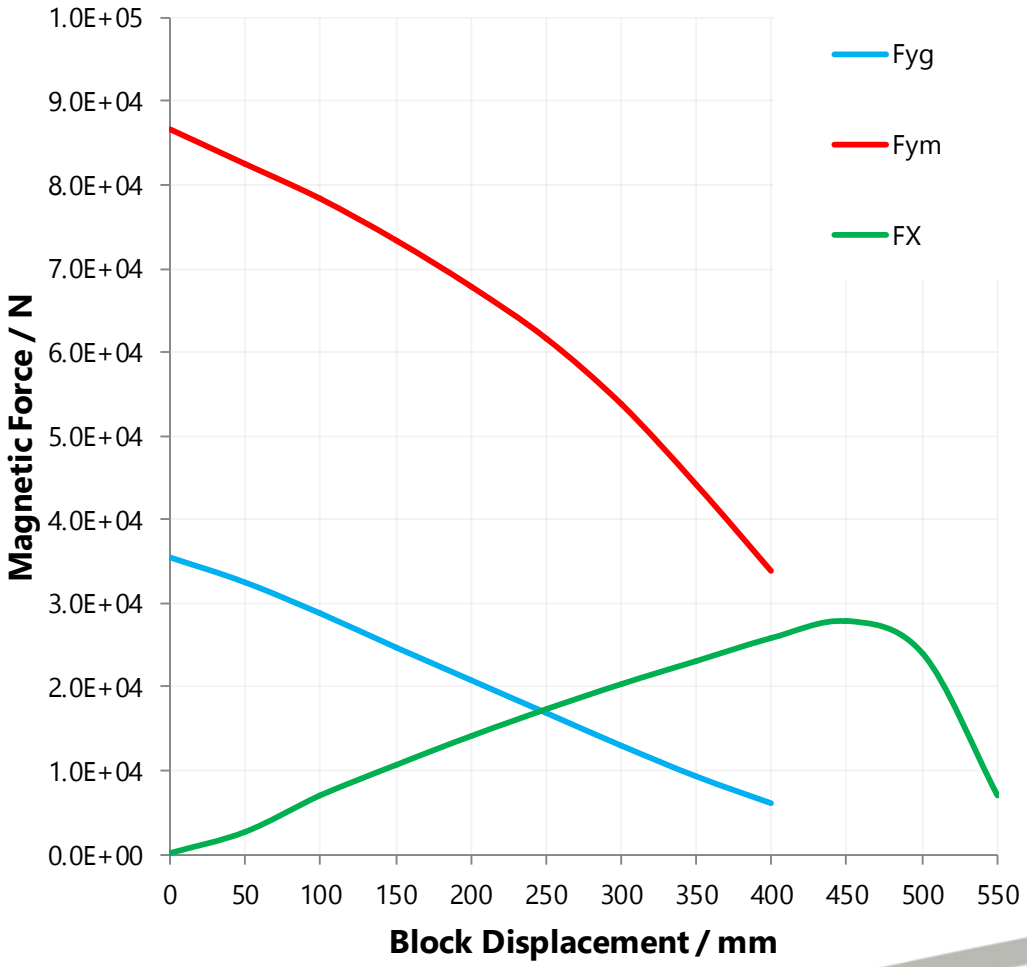

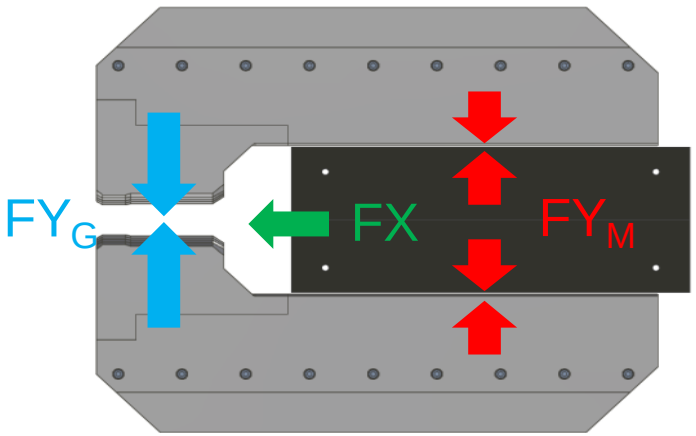

Science & Technology Facilities Council
10 Years of Impact and Inspiration

Engineering

- Sliding assembly using rails, stepper motor and gearbox.

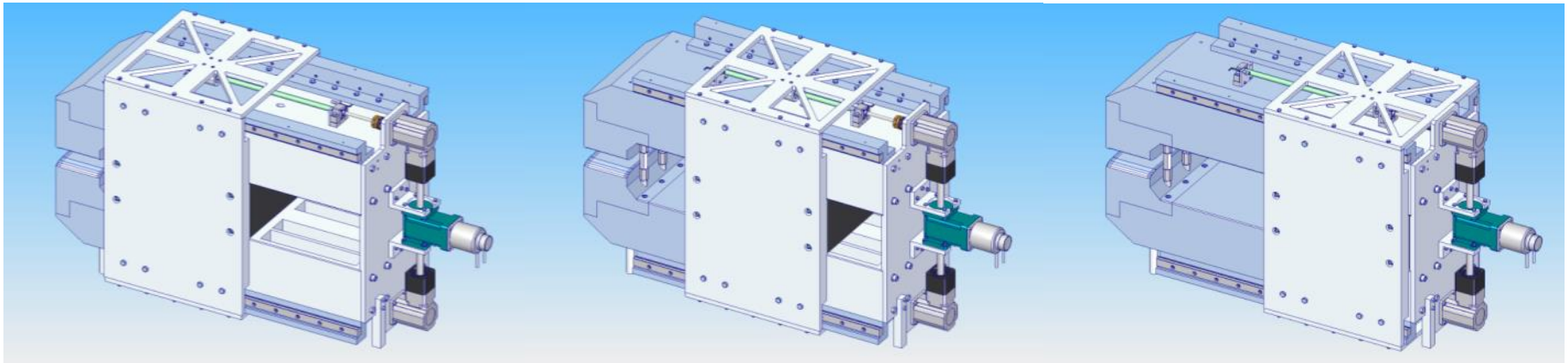

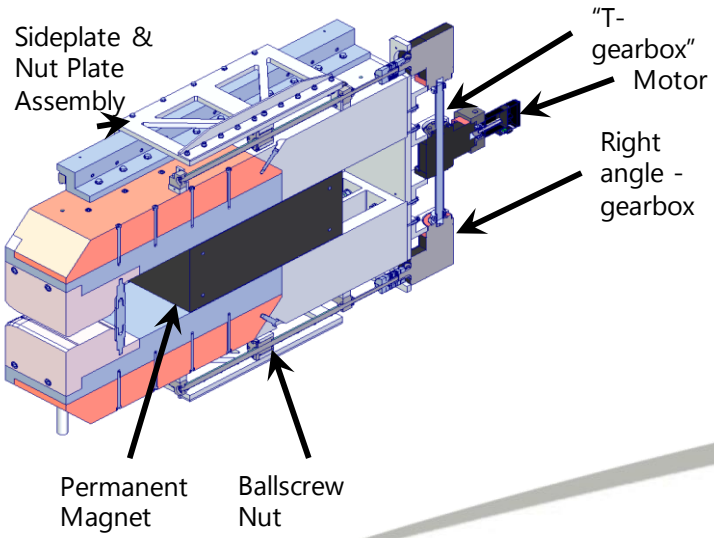

3 support rods hold jaws of magnet fixed
Can be independently adjusted

Poles held 2 mm from surface of block

Assembly

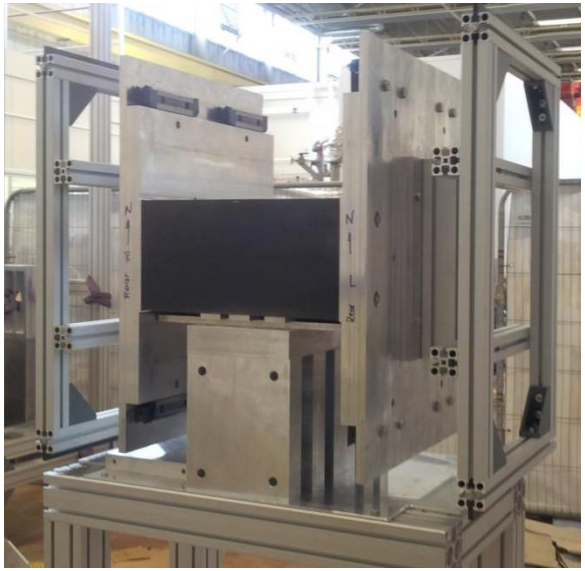

Conclusions

- Tuneable permanent magnets are becoming a reality, merging the versatility of electromagnets with savings in operating costs (both financial and environmental) and infrastructure.

- A pure PM dipole with large tuning range is under construction. This follows successful developments in PM quadrupoles and is in parallel with other tuneable dipole developments around the world.

- There are additional challenges over conventional electromagnets – moving ferromagnetic components results in shift of magnetic axis or changing homogeneity. Magnetic forces hinder movement and require careful mechanical design.

Acknowledgements

Ben Shepherd

Jim Clarke

Neil Marks

Norbert Collomb

Michele Modena

Alex Bainbridge

+ Thanks to James Richmond, Graham Stokes, Antonio Bartalesi, Mike Struik, Marco Buzio, Samira Kasaei, Carlo Petrone

+ The many engineers/riggers at Daresbury who have contributed

Funding from STFC and CLIC @ CERN

Science & Technology Facilities Council
10 Years of Impact and Inspiration