Babcock Noell GmbH

Karlsruhe Institute of Technology

25th International Conference on Magnet Technology 29.08.2017

Superconducting Undulators Toward Commercial Products

C. Boffo, Th. Gerhard, M. Turenne, W. Walter; Babcock Noell GmbH

S. Casalbuoni, A. Grau, T Holubek, N. Glamann, D. Saez de Jauregui; Karlsruhe Institute for Technology

Outline

- Introduction to undulators
- The challenge of SCUs
- Achievements of SCU15
- Prototype to product
- Performance of SCU20
- Conclusion

Introduction

Evolution of undulators

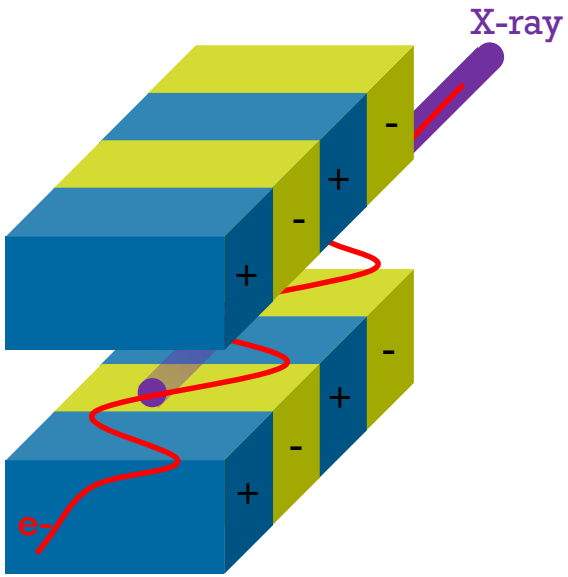

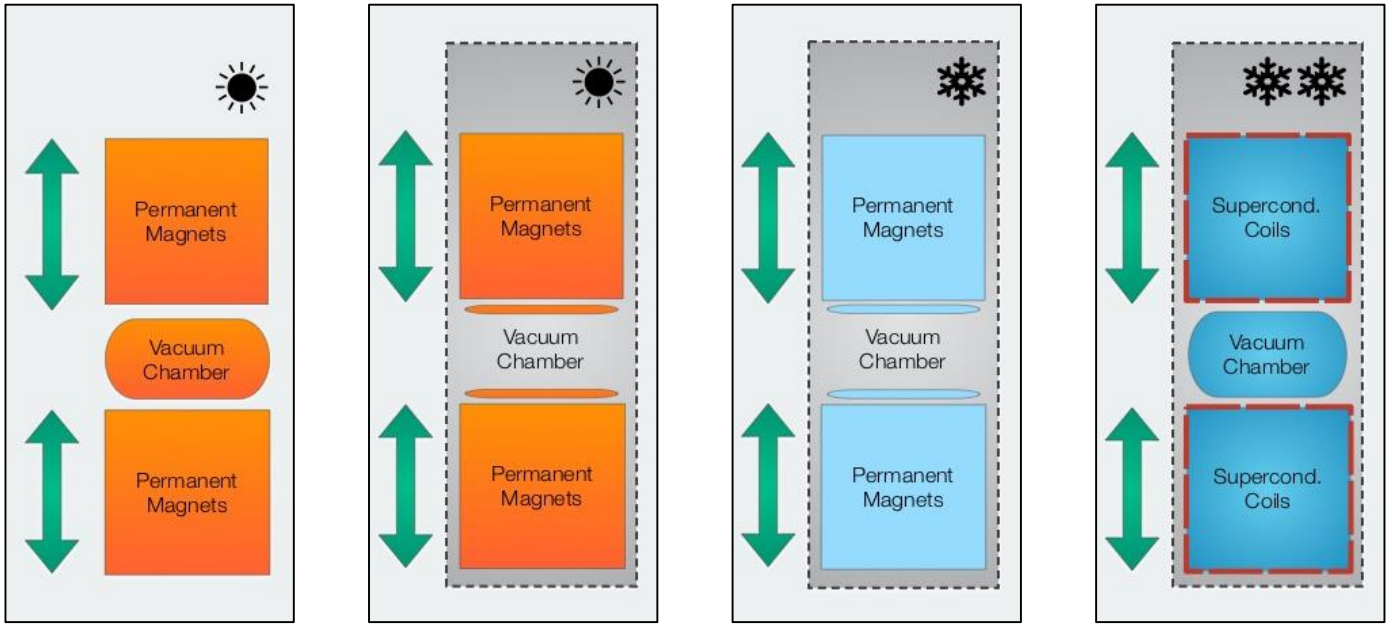

Permanent magnet Undulator	In vacuum Undulator	Cryogenic Undulator	Superconducting Undulator
Traditional design Climatized room Cheapest design	UHV vacuum chamber Reduced distance of magnets	Improved B field Increased complexity	Highest B field 4 K design Electromagnets
Low performance	Good performance	Better performance	Best performance

A Challenging Superconducting Magnet

Specific requirements of superconducting undulators

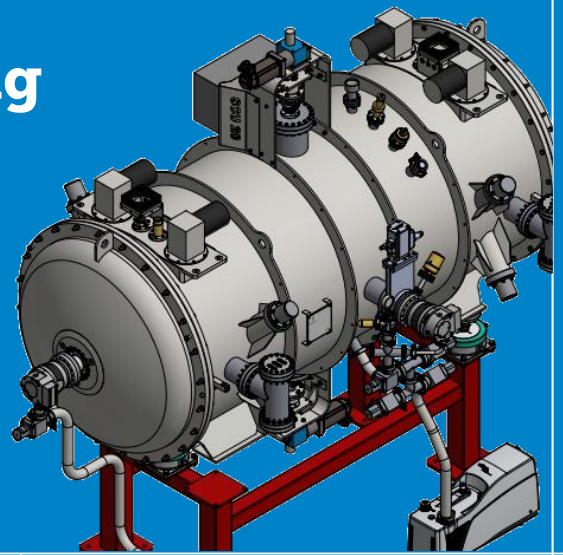

High Precision

Winding groove	+/- 10 μm
Flatness coils	50 μm
Winding package	40 μm
Coil alignment	< 100 μm

Beam Transparent

Six pairs of corrector coils to minimize the first and second field integrals.

UHV better than 5E-10 mbar.

Conduction Cooled

The use of cryocoolers allows operation in absence of a cryoplant.
Minimization of thermal gradients and contact resistances is key.

Variable Gap

ANKA specific:
Possibility to increase the vacuum gap to 15 mm when the coils are cold but not powered.

Beam Heat load

Separate cooling of the cold beam pipe is required to cope for heat loads above 8 W/m.
Distance between coils and beam pipe 0.15 mm.

Current Density

In order to achieve high peak fields on axis an engineering current density above 700 A/mm^2 at ~3 T is required.

SCU15 and SCU20

Main Parameters

	SCU15	SCU20	Units
Period length	15	20	mm
Full periods	100.5	74.5	
Max field on axis 7 mm gap	0.73	1.19	T
Nominal current	150	395	A
Ramp to nominal current	450	300	s
Operating vacuum gap	7	7	mm
Injection vacuum gap	15	15	mm
Beam heat load	4	4	W
Design temperature	4.2	4.2	K

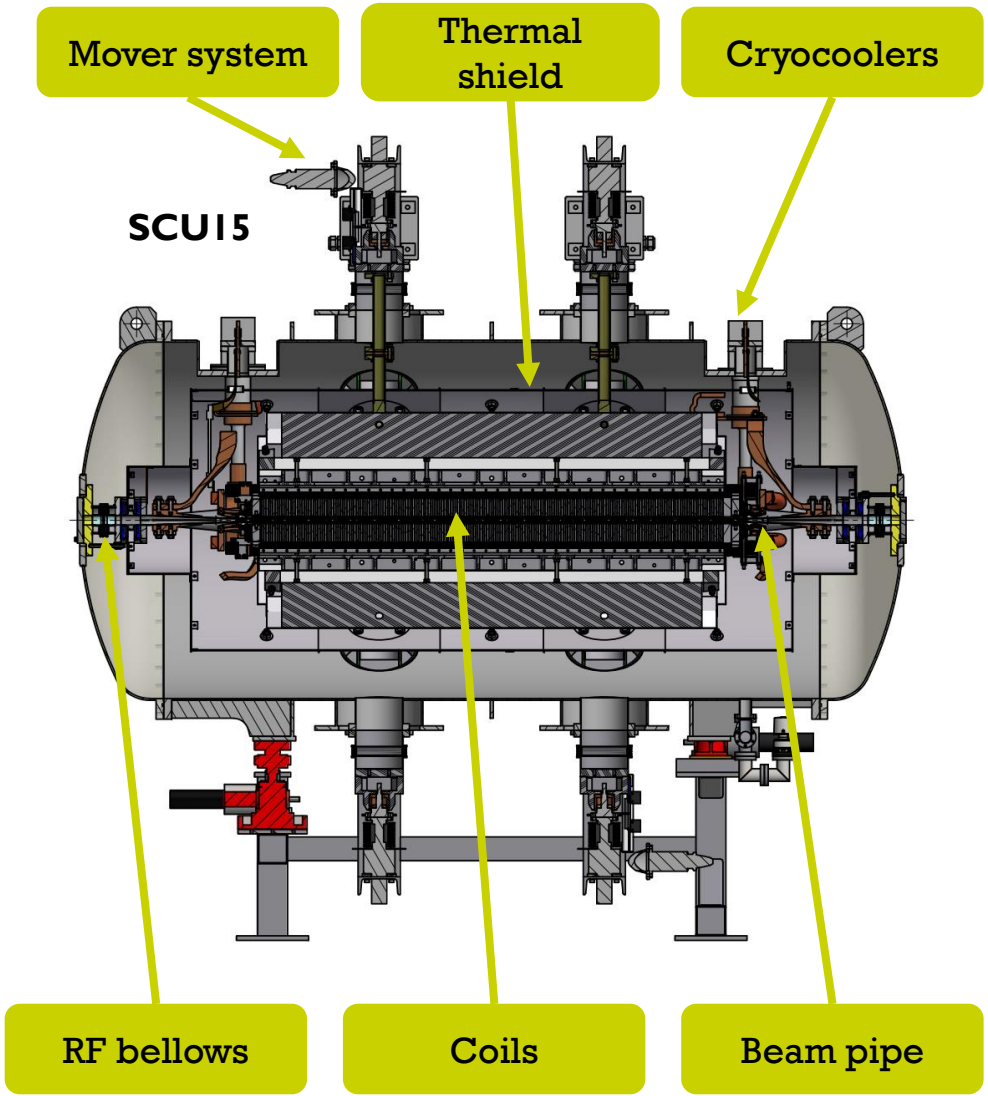

Achievements of SCU15

SCUs are transparent to the beam and deliver high brilliance light

- System cooldown in 1 week
- Base temperature of the coils with no current < 3.2 K
- No impact on beam lifetime
- No quench while in operation with beam
- Higher peak field compared to competing technologies

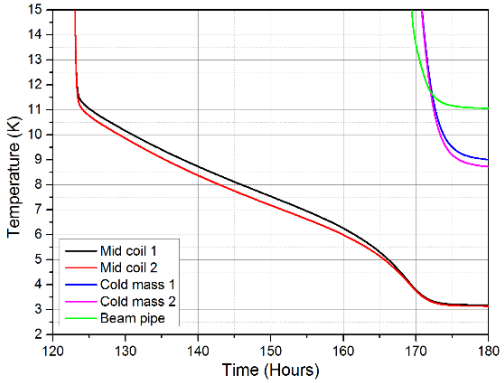

C. Boffo et al., IEEE Trans. Appl. Supercond. **26-4**, 4102404 (2016)

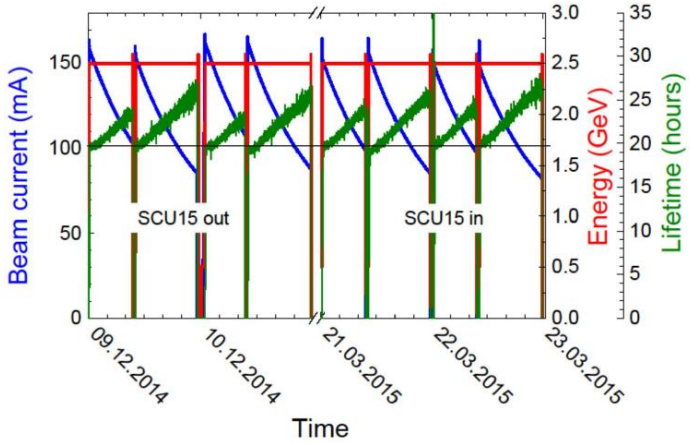

S. Casalbuoni et al., Phys. Rev. Accel. Beams 19, 110702 (2016)

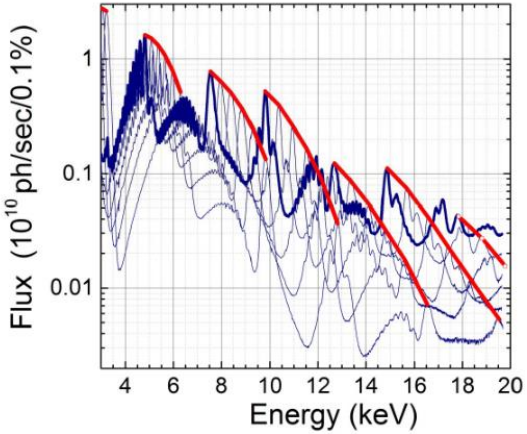

S. Casalbuoni et al., AIP Conf. Proc. **1741**, 020002 (2016)

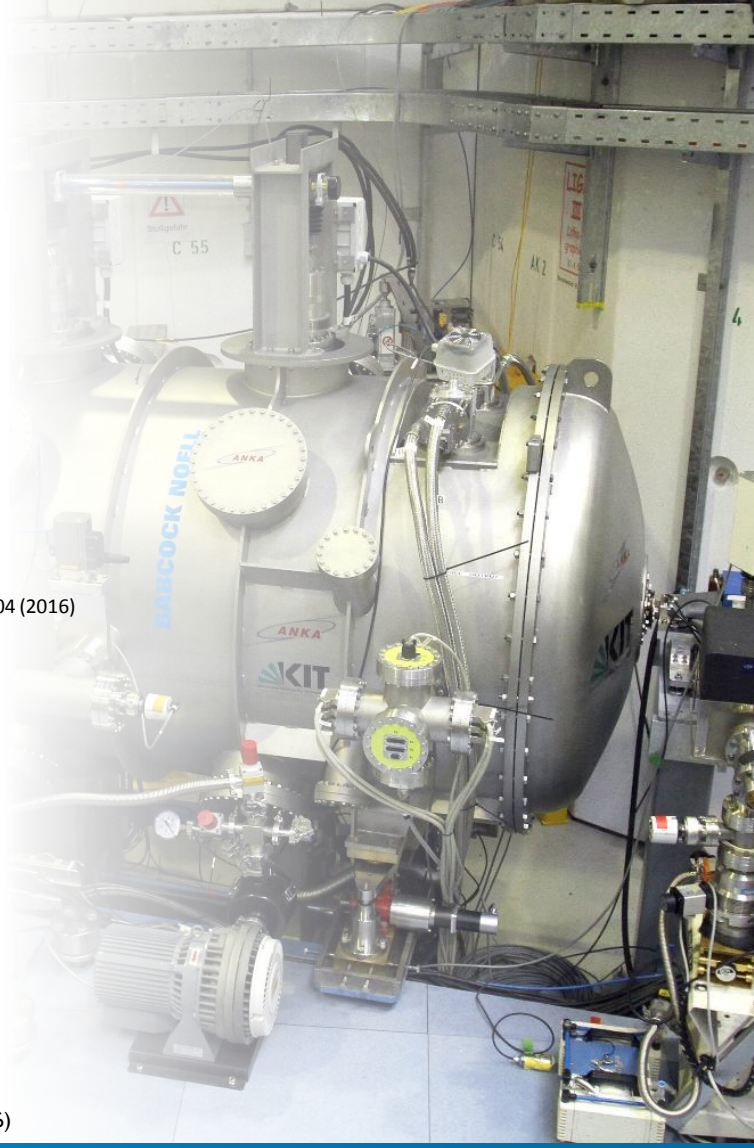

Prototype to Product

Design and manufacturing optimization

IMPROVED PERFORMANCE

Block design for the former

Use of round superconductor

Increased number of corrector coils

Using the flexible beam pipe as magnet spacer

INCREASED RELIABILITY

Improved former insulation

Optimized winding scheme without joints

Finger bellows at room temperature

HTS leads for corrector coils

Increased number of temperature sensors

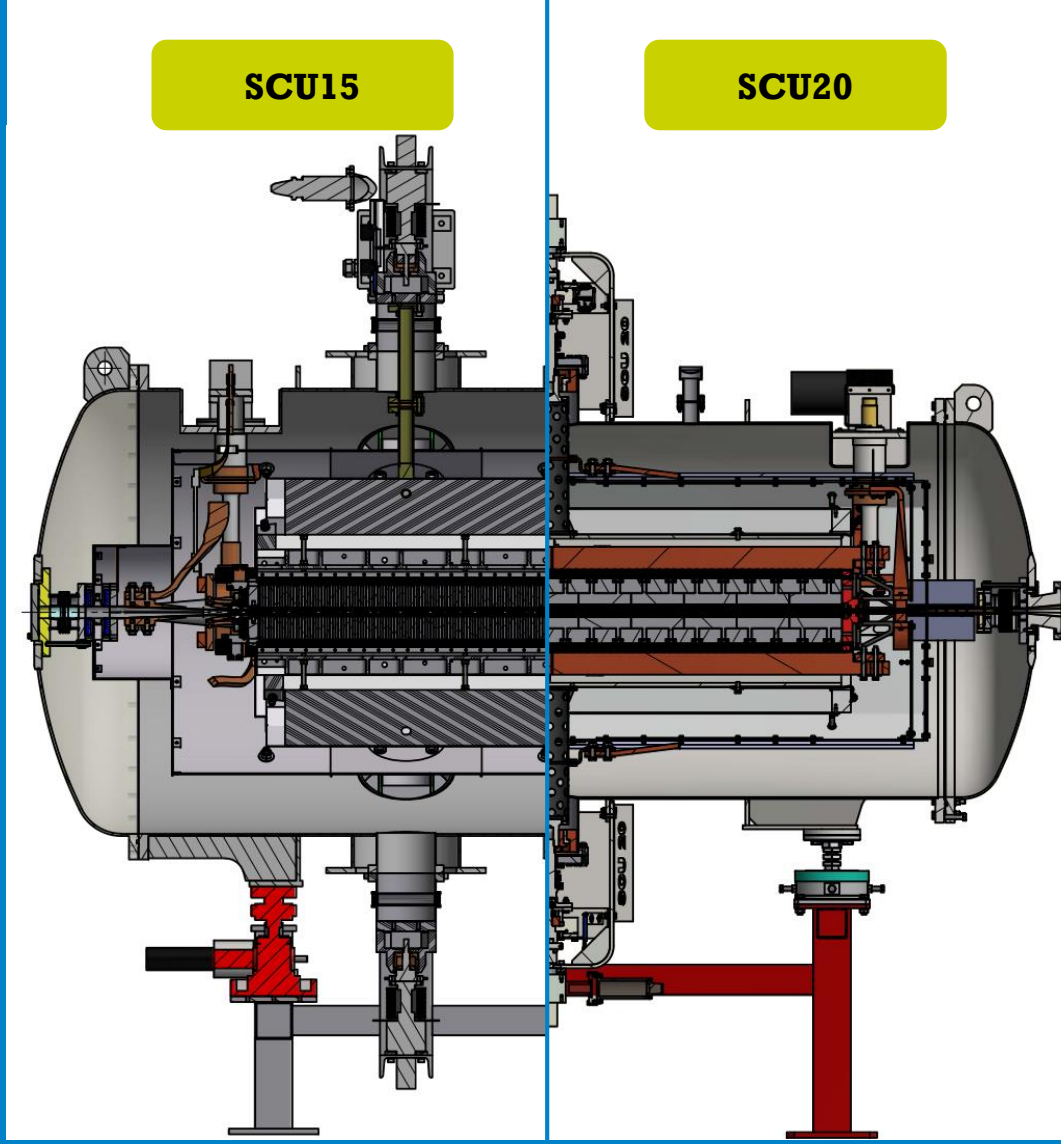

Prototype to Product

Design and manufacturing optimization

COST REDUCTION

Standard low-carbon steel for the former

Fixtures to improve alignment

Reduced weight of cold mass

Reduced diameter and length of cryostat

Use one single penetration for movers

Reduced number of ports on cryostat

4 identical cryocoolers

Simplified support system

Manual adjusting feet

SCU20 Performance

Results of the Factory and Site Acceptance Tests

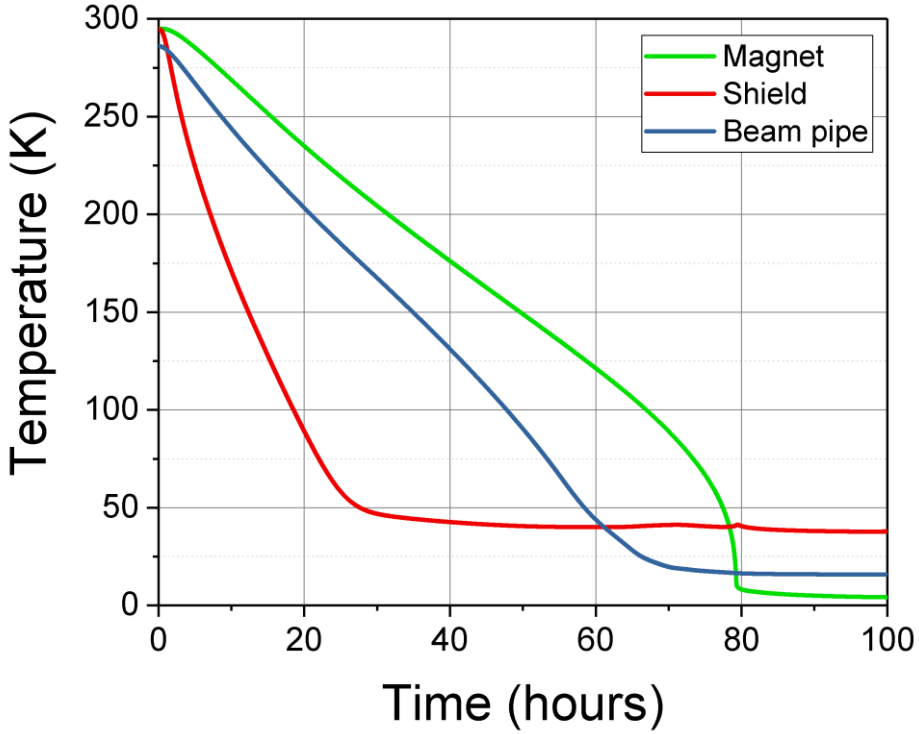

Fast cooldown

Minimal temperature drift during ramping

Negligible impact of coils repositioning

Stable operation of main and corrector coils

Safe quench behavior

High quality UHV in the cold beam pipe

SCU20 Performance

Results of the Factory and Site Acceptance Tests

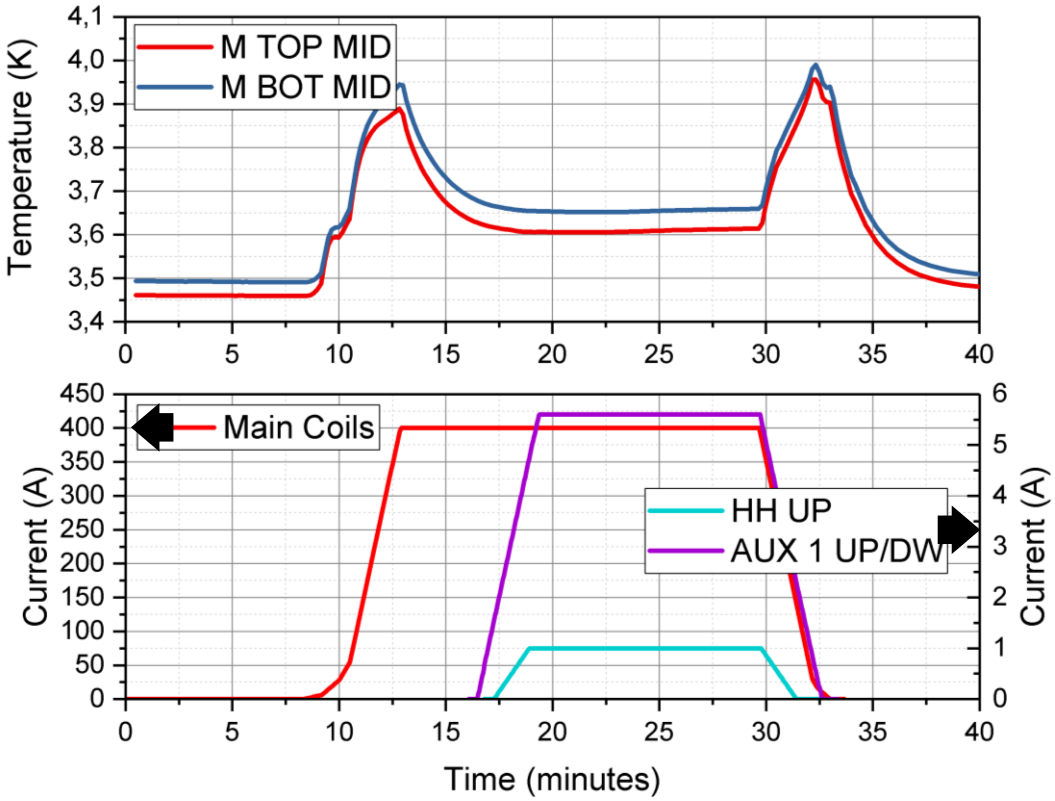

Fast cooldown

Minimal temperature drift during ramping

Negligible impact of coils repositioning

Stable operation of main and corrector coils

Safe quench behavior

High quality UHV in the cold beam pipe

SCU20 Performance

Results of the Factory and Site Acceptance Tests

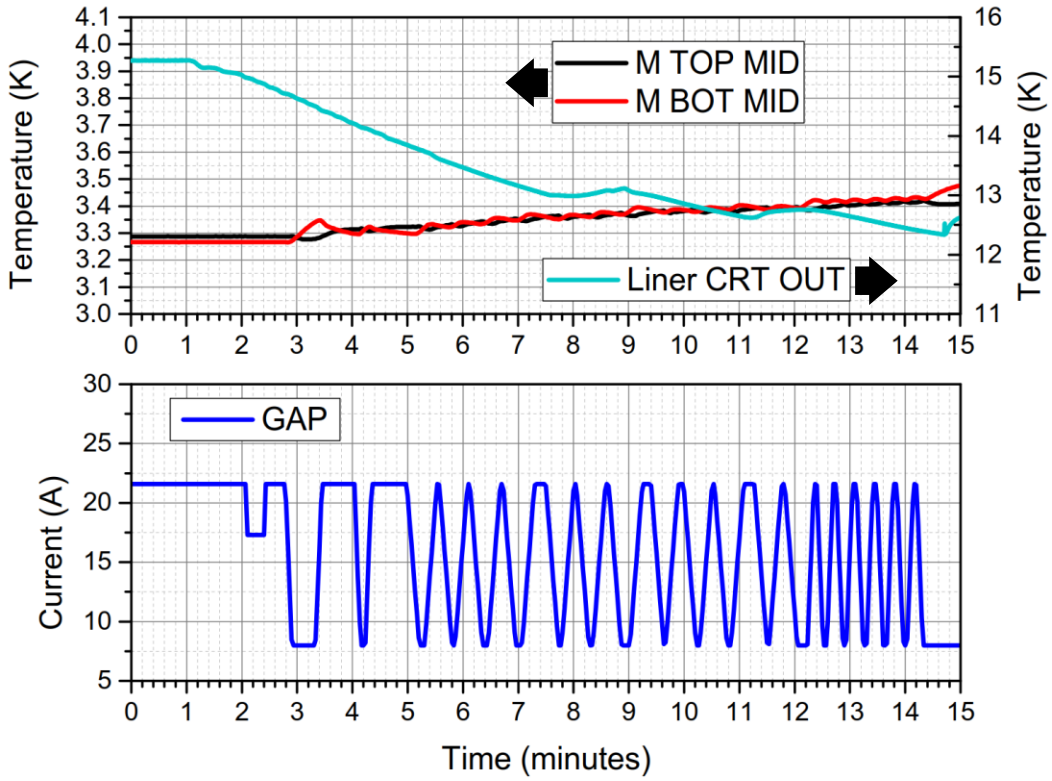

Fast cooldown

Minimal temperature drift during ramping

Negligible impact of coils repositioning

Stable operation of main and corrector coils

Safe quench behavior

High quality UHV in the cold beam pipe

SCU20 Performance

Results of the Factory and Site Acceptance Tests

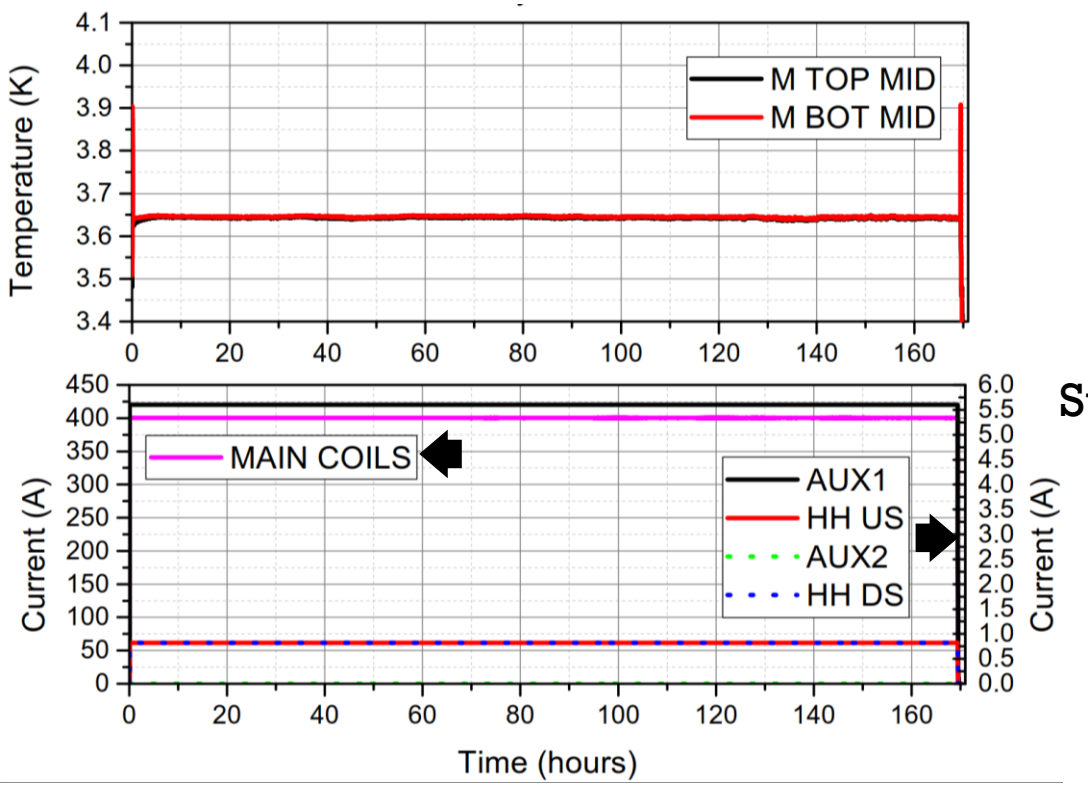

Fast cooldown

Minimal temperature drift during ramping

Negligible impact of coils repositioning

Stable operation of main and corrector coils

Safe quench behavior

High quality UHV in the cold beam pipe

SCU20 Performance

Results of the Factory and Site Acceptance Tests

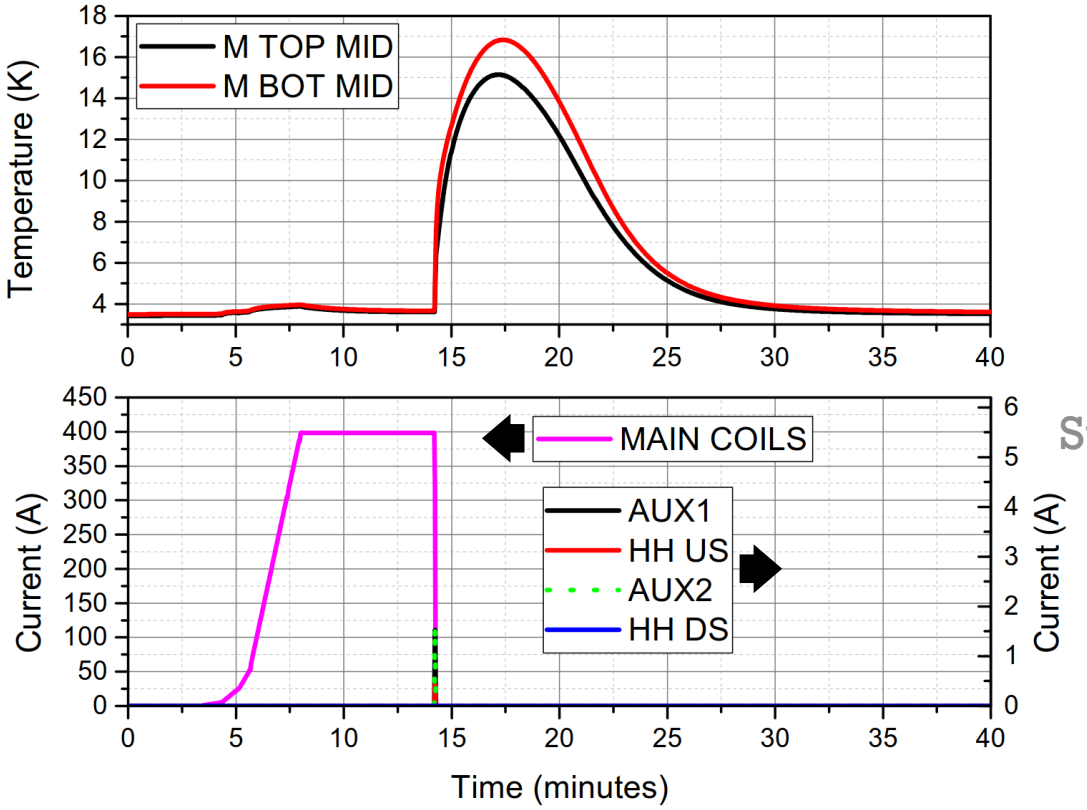

Fast cooldown

Minimal temperature drift during ramping

Negligible impact of coils repositioning

Stable operation of main and corrector coils

Safe quench behavior

High quality UHV in the cold beam pipe

SCU20 Performance

Results of the Factory and Site Acceptance Tests

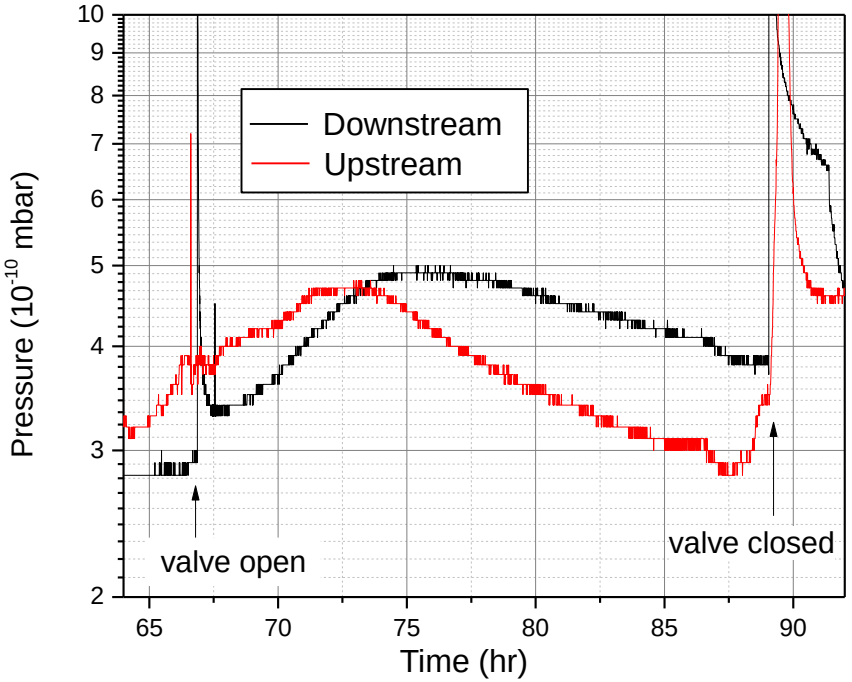

Fast cooldown

Minimal temperature drift during ramping

Negligible impact of coils repositioning

Stable operation of main and corrector coils

Safe quench behavior

High quality UHV in the cold beam pipe

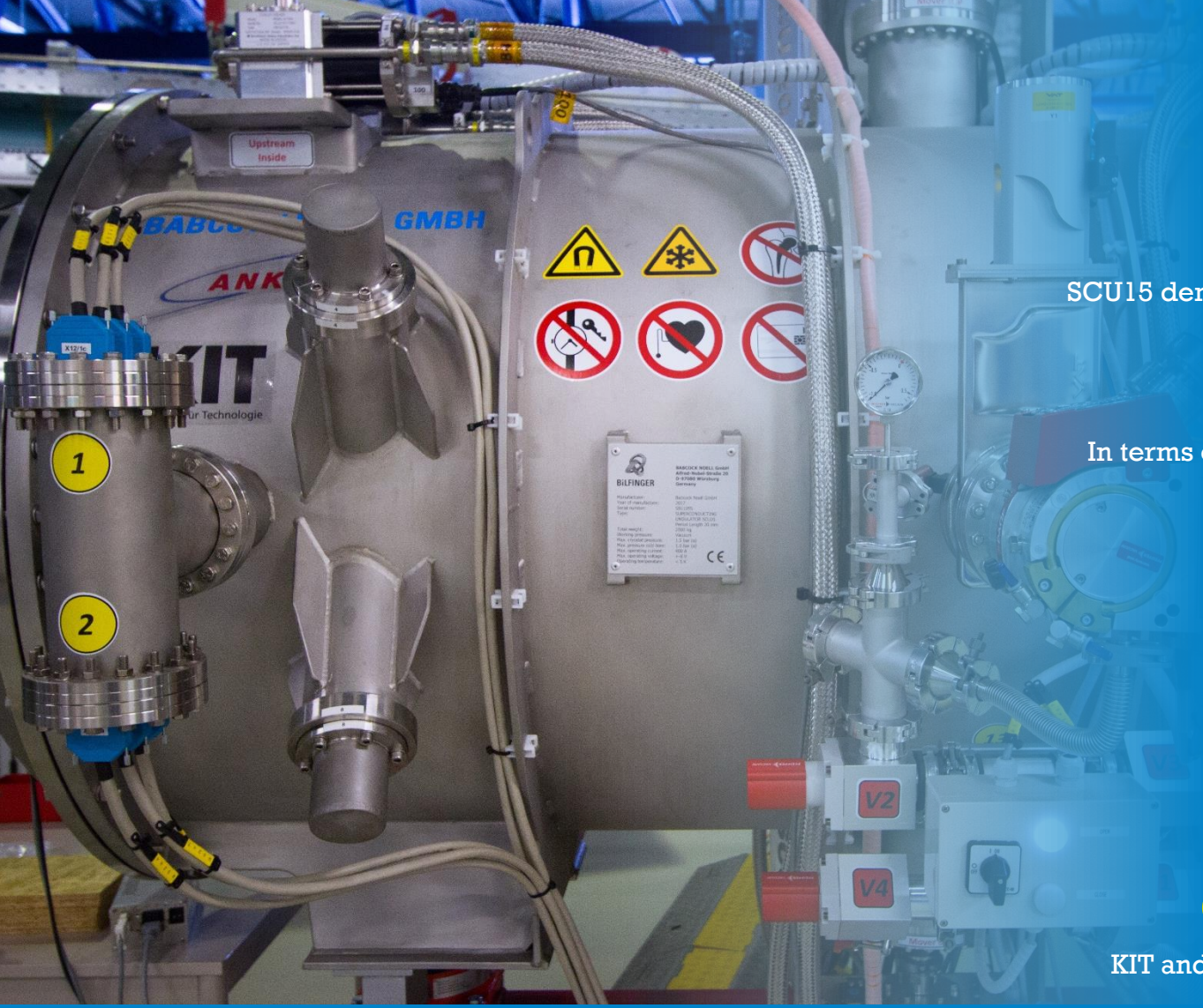

Conclusions

RELIABLE

SCU15 demonstrated long term operation in the ANKA ring

BRILLIANT

In terms of peak field, both SCU15 and SCU20 outperform devices with competing technologies

PLUG'n PLAY

No liquid helium required

OUTSTANDING UHV

No impact of the cold bore on beam operation

COMMERCIALLY AVAILABLE

KIT and Babcock Noell can tailor a device to your needs

If you are looking for the most brilliant source for your storage ring or FEL

CONTACT US

Cristian.boffo@bilfinger.com

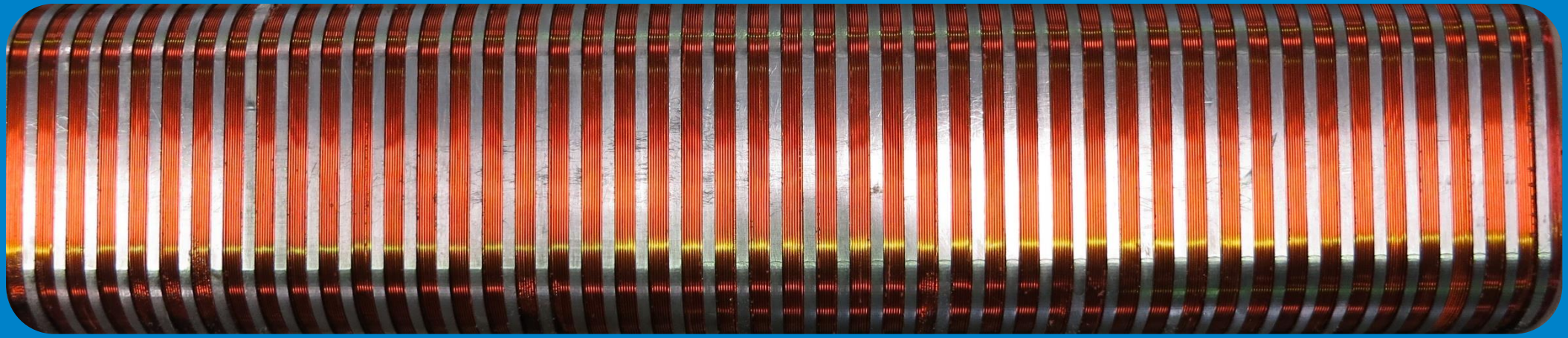

Thank you for your attention