ASG Superconductors

MT25
25th International Conference on Magnet Technology

ENLARGED BORE 11.74T MAGNET FOR BRAIN RESEARCH APPLICATION (ID #858)

Alessio Capelluto, Stefano Cuneo, Darren Houlden, Roberto Marabotto, Martina Neri, **Gabriella Norcia**, Giorgio Salvitti

SUMMARY

Ultra-high field magnets are becoming fundamental in brain research in order to satisfy the higher requirements in tissue contrast, spectral resolution and signal to noise ratio. ASG is putting a lot of effort to be competitive in this sector. After a 7 T conceptual design, now ASG is working on an 11.74 T MRI magnet for the Gachon University GIL Hospital.

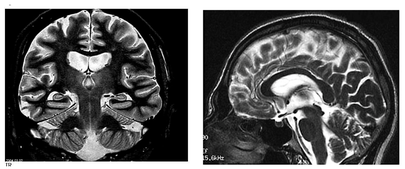

MAGNET DESIGN

The design process of a superconductive magnet includes different aspects as magnetic field strength, size of the room temperature bore, homogeneity of field, fringe field constraints, containment of electromagnetic forces, high stability and costs.
In order to achieve the requested field of 11.74 T a NbTi wax impregnated compensated solenoid has been designed.

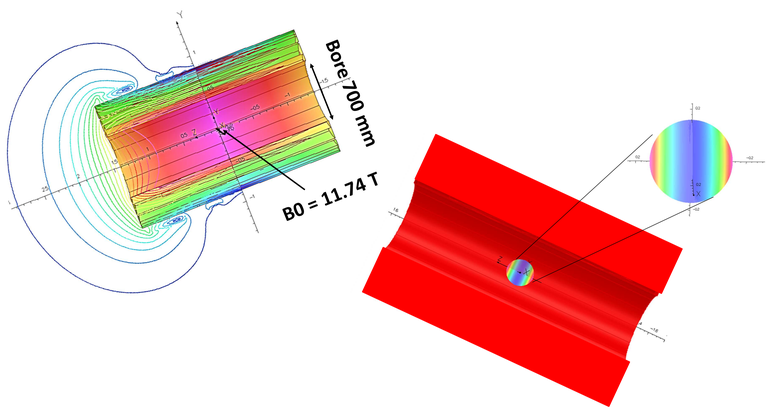

MECHANICAL DESIGN

The system overall length of 3 meters is reached with an overall weight less than 60 tons.
Lorentz forces and coil interactions produced by the magnet have been calculated in order to verify mechanical structure and stresses on the coils.

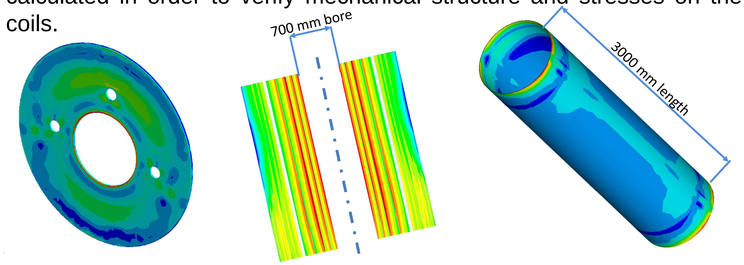

Finite element calculations have been performed in order to be compliant to PED standard and EN 60601-1.

SUPERCONDUCTING SHIMS

In order to achieve the imaging MRI quality, the magnetic field in the imaging volume has to be homogeneous. Typically a variation in field of less than 5 ppm is required. Manufacturing tolerances can cause deviations from the theoretical field profile, so additional smaller superconductive coils (Shim coils) are used to make tiny adjustments in the field profile.

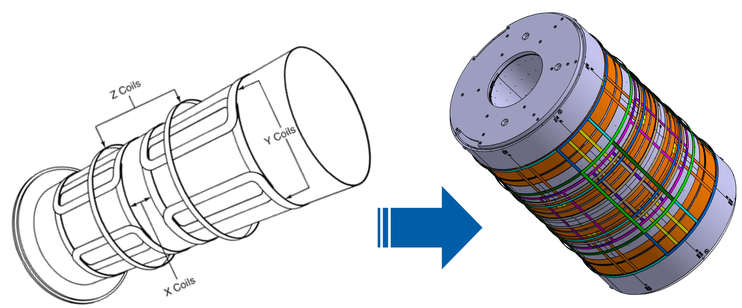

THERMAL DESIGN

Niobium Titanium (NbTi) wire is most commonly used on MRI magnets.
The operating temperature of superconducting wire effects its performance. By reducing the helium bath temperature from 4.2 K to less than 3 K the critical field can be increased, in this way the NbTi wire can be used to make 11.74 T magnets by reducing the vapour pressure.

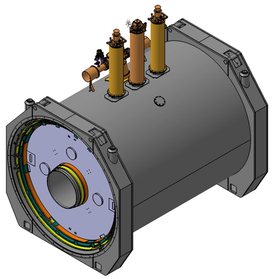

The whole magnet is working in helium bath and the radiation load is reduced using several thermal shields, cryocooler cooled.

PASSIVE SHIELD

Legal standard restricts the public access only to regions where the magnetic field is less than 5 gauss (0.0005 T). On a large system as the 11.74 T magnet, this region can cover an area of 54 x 42 meters. To reduce the fringe field an iron room can be carefully constructed around the magnet.

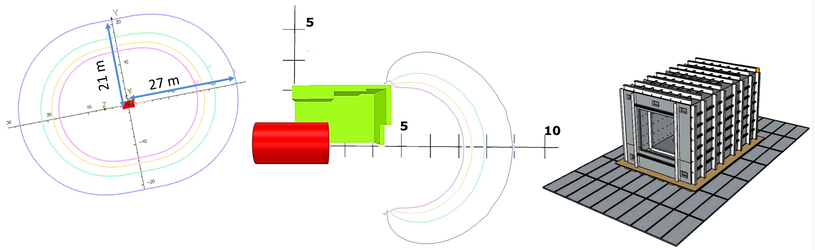

MAGNET PRODUCTION ON GOING