32T Superconducting Magnet Protection System

P.D. Noyes,
W. A. Coniglio,
A. V. Gavrilin,
S. T. Hannahs,
B. Jarvis,
W.D. Markiewicz,
A. Powell,
E. Stiers,
A.J. Voran,
H.W. Weijers
A. Zeller

MT25
25th International Conference on Magnet Technology

Amsterdam
August 27 – September 1, 2017

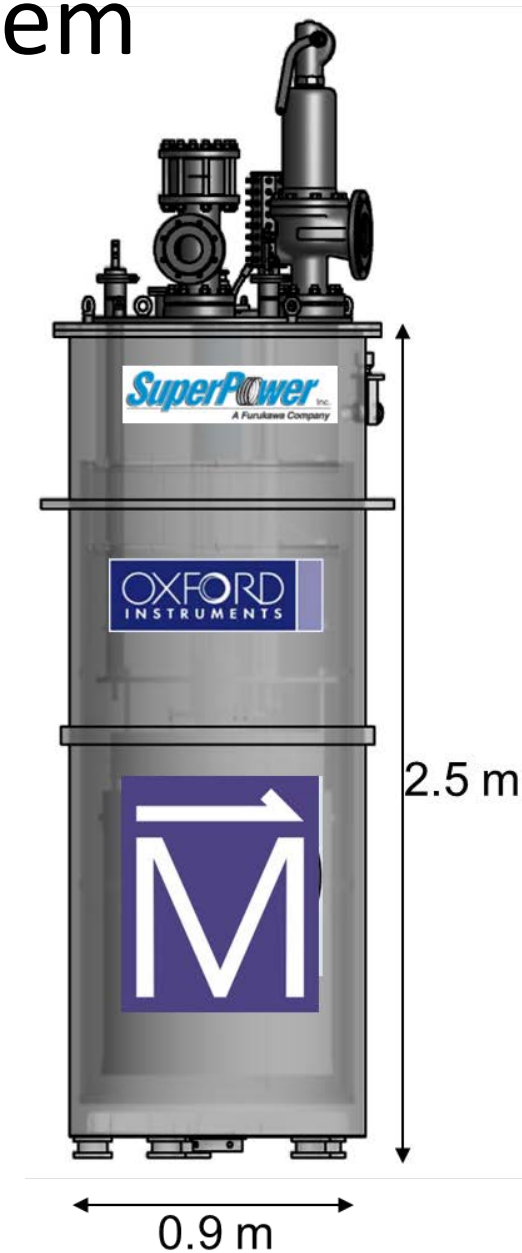

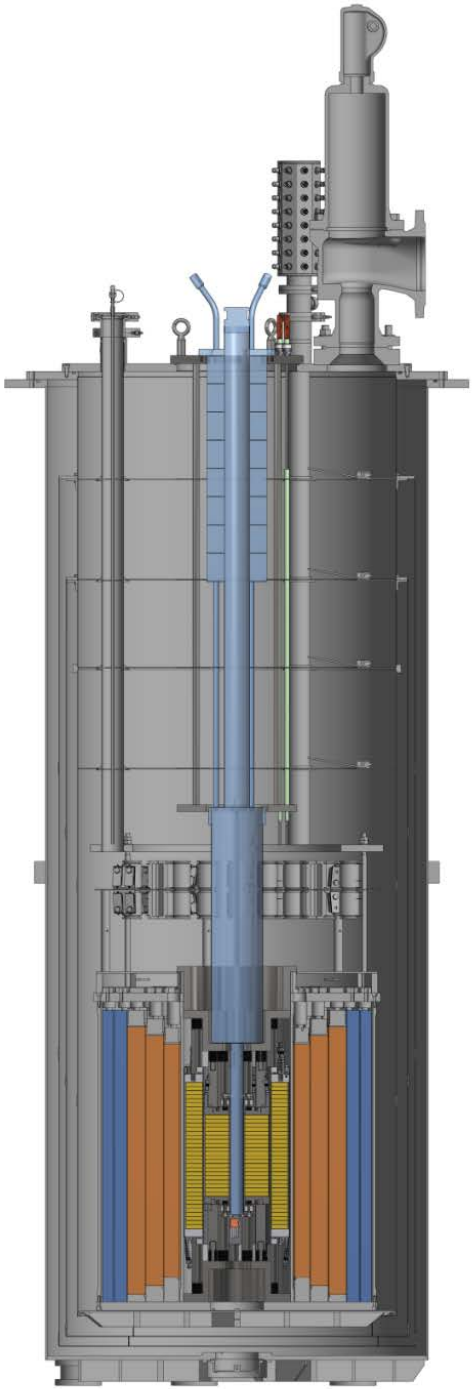

Coil Parameters

NATIONAL HIGH MAGNETIC FIELD LABORATORY

Coil Parameters	HTS		LTS	
	Coil 1	Coil 2		
Field Contribution	10.8	6.2	15	T
Operating Current	173	173	268	A
Inner diameter	40	164	250	mm
Outer diameter	140	232	630	mm
Coil Height	178	320		mm
Ramp to full field	1			hour
Self inductance	17.0		194	H
LTS to HTS Mutual inductance	22.5			H

Conductor Performance

Improved with later acquisition date

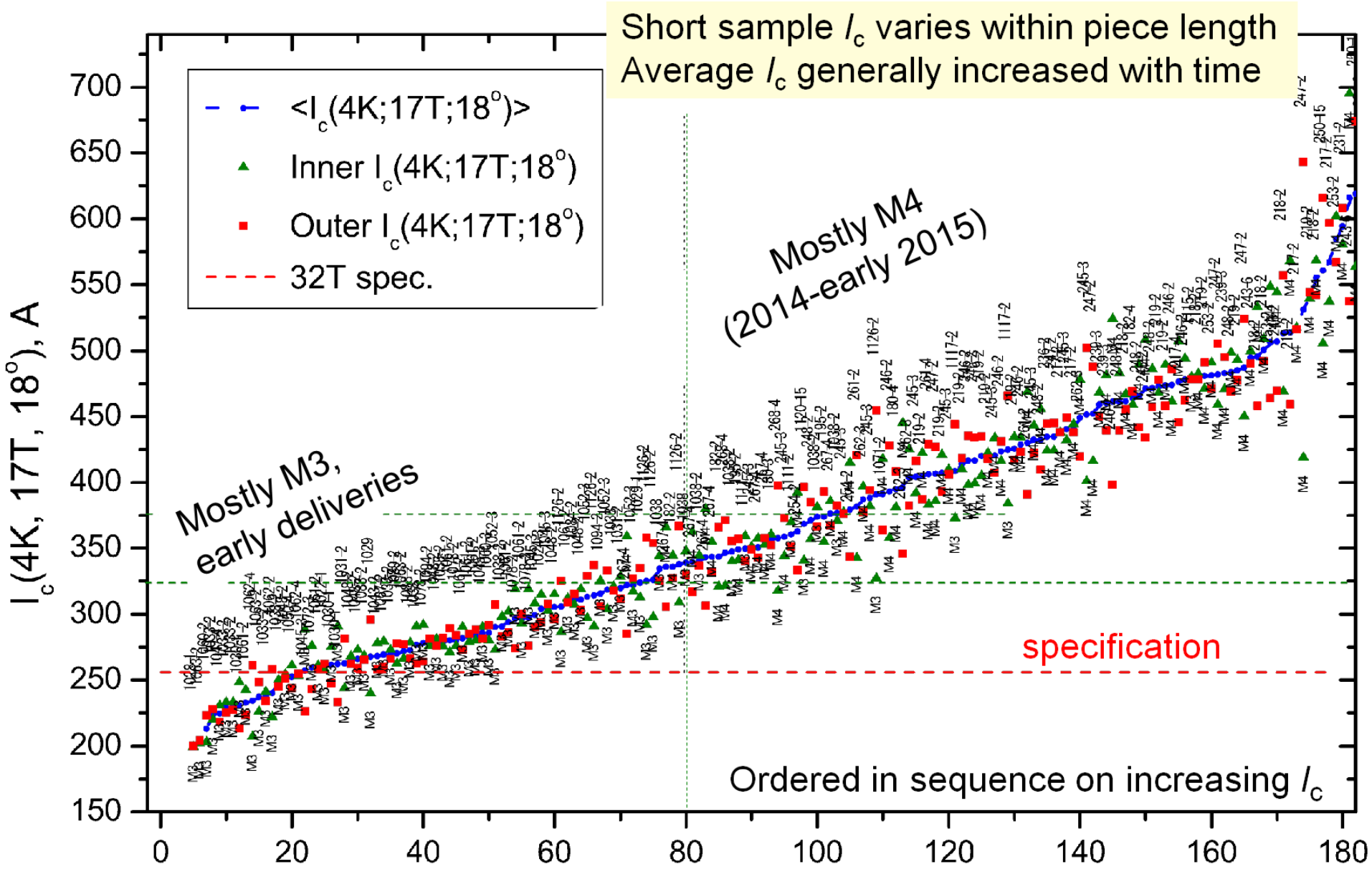

Heater Design Parameters

32T Protection Parameters	Coil 1	Coil 2	
Heater active area percent	50%	50%	
Heater disk resistance @ 4.2K	3.3	5.1	Ohms
Number of heaters (clusters)	18	34	
Number of heaters in series (1 cluster)	3	2	
Number of heater clusters in parallel	6	17	
Heater Current	23.7	23.2	A
Total Heater Voltage	287		V
Weighted Average Heater Power	0.15		MW

Protection Circuits

Distribution

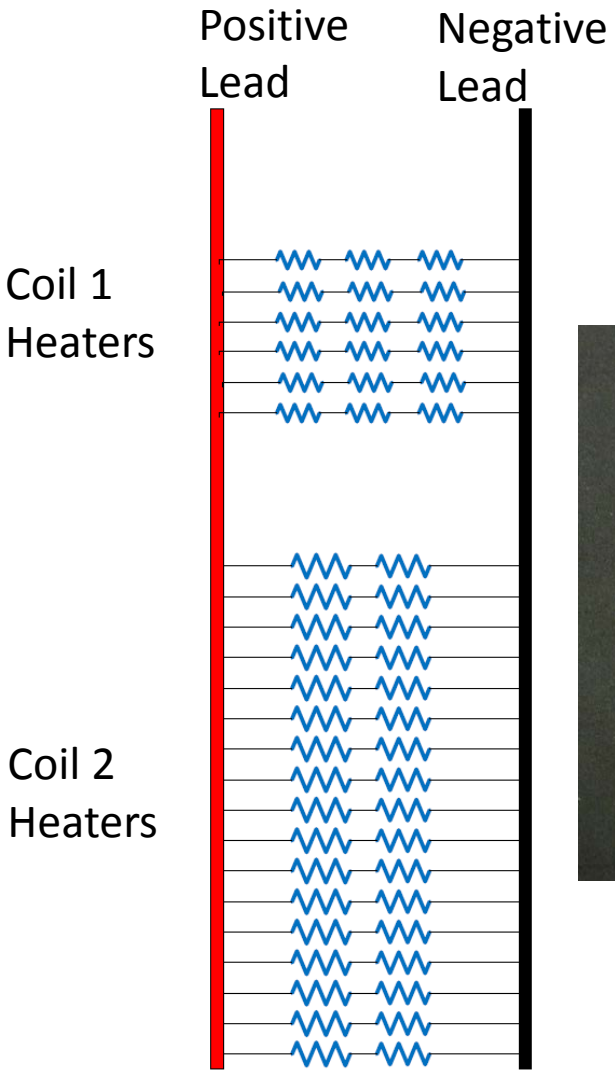

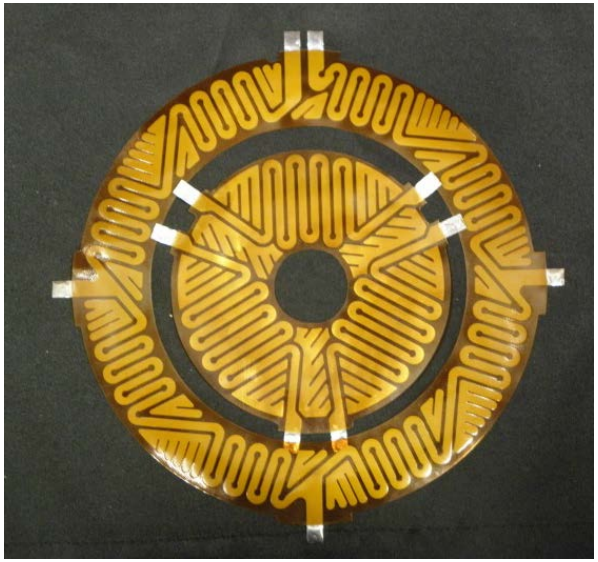

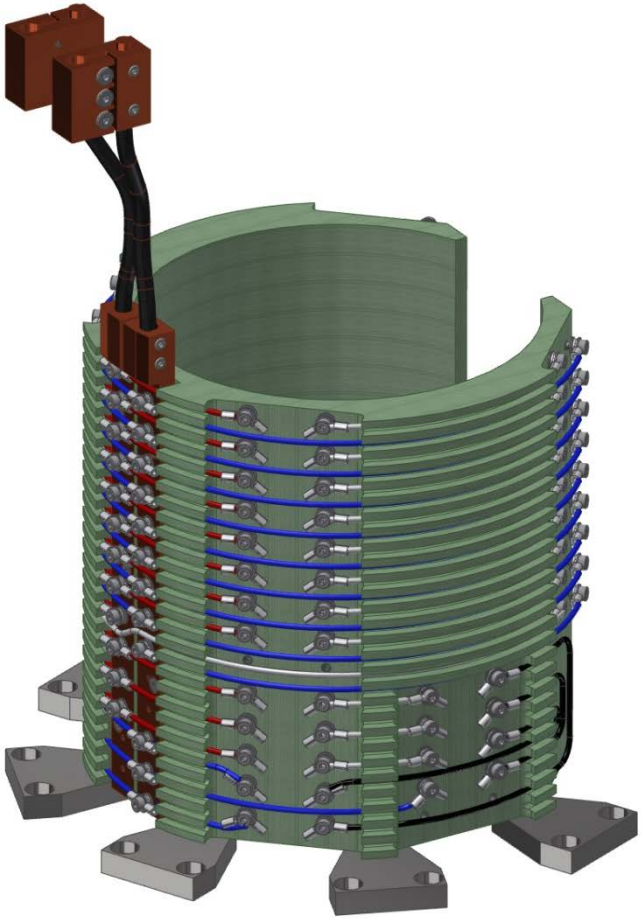

Battery Bank

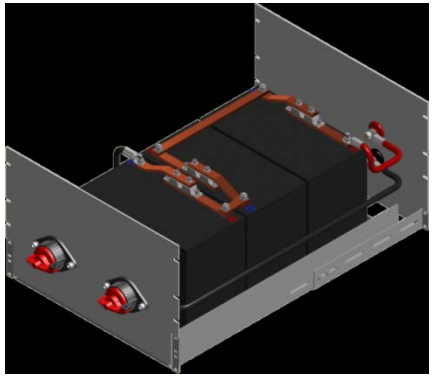

- 31 Lead-acid batteries in series
- Batteries are distributed across 11 shelfs in 2 racks
- Battery Capacity - 100 A*hr
- Idle terminal voltage – 390 V
- Load terminal voltage – 270 V
- Peak Current – >600 A
- Pulse Duration – 1.0 sec
- 250 A Bussman Fuses at positive terminals

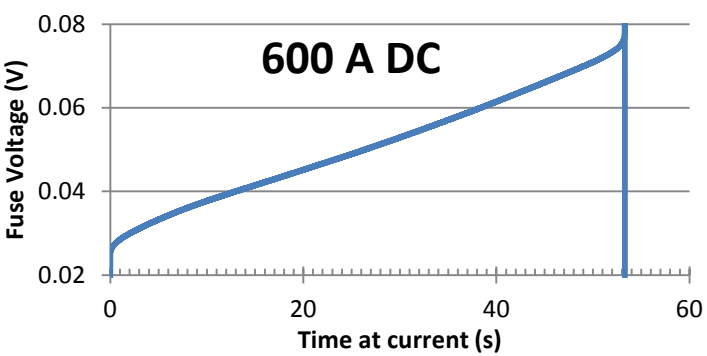

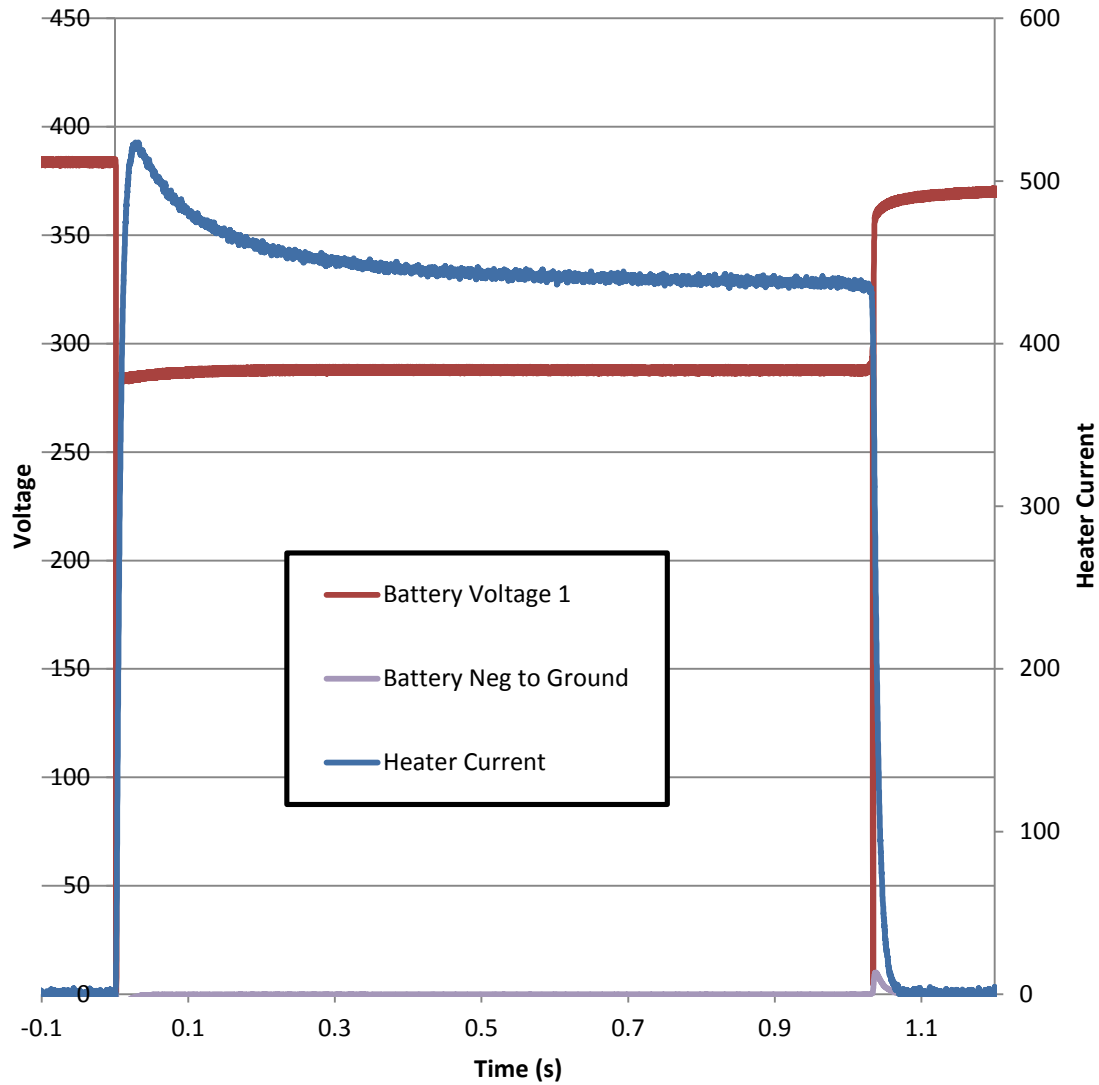

Switch Boxes

NATIONAL HIGH MAGNETIC FIELD LABORATORY

A single Switch Box

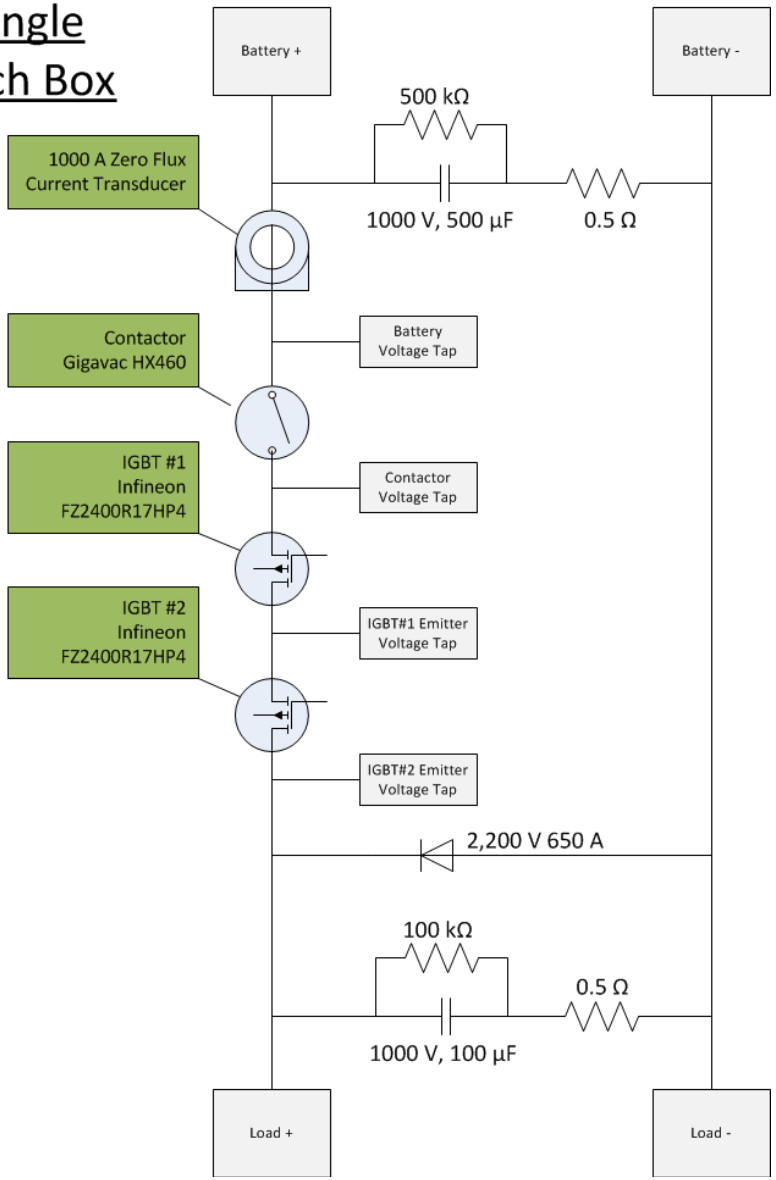

Battery Bank has a peak possible current of 1600 A and the switch boxes must be able to break it

Protection Logic - Balancing

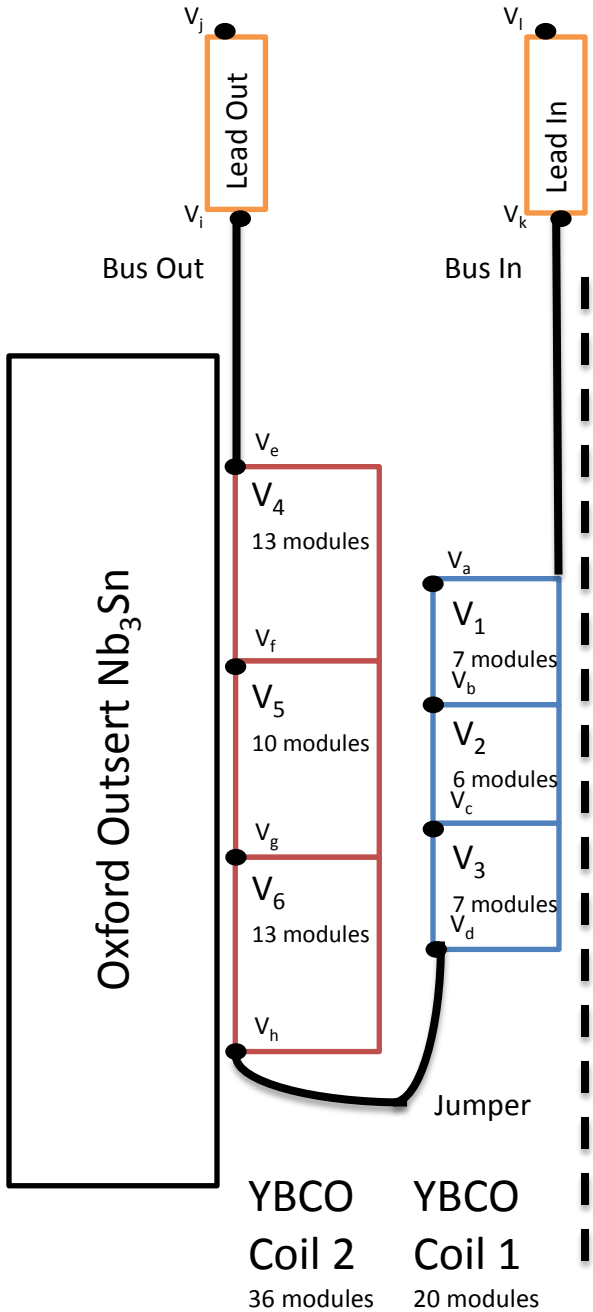

$V_1=V_a-V_b$

$V_2= V_b-V_c$

$V_3=V_c-V_d$

$V_4=V_e-V_f$

$V_5= V_f-V_g$

$V_6=V_g-V_h$

$V_{jumper} =V_h-V_d$

$Coil1 = V_a-V_h$

$Coil2 = V_h-V_e$

α- Ratio L_{V1}/L_{V2}

β - Ratio L_{V4}/L_{V5}

C_0- Ratio L_{Coil1}/L_{Coil2}

NATIONAL HIGH MAGNETIC FIELD LABORATORY

HTS has 2 parallel detection systems for redundancy

<u>Primary HTS Protection Channels</u>

1. V_1-V_3
2. $\alpha V_2-(V_1+V_3)/2$
3. V_4-V_6
4. $\beta V_5-(V_4+V_6)/2$
5. $V_{lead\ in}=V_l-V_k$
6. $V_{lead\ out}=V_i-V_j$
7. $V_{bus\ out}=V_a-V_k$
8. $V_{bus\ in}=V_e-V_i$
9. $V_{jumper}=V_h-V_d$
10. V_d to Ground
11. Quench Com Loop

<u>Secondary HTS Protection Channels</u>

1. $Coil1 - C_0*Coil2$
2. $Coil1 + C_0*Coil2$
3. Quench Com Loop

Protection Logic
Thresholds and Filtering

NATIONAL HIGH MAGNETIC FIELD LABORATORY

Primary Trip Thresholds

	Channel	Voltage Threshold	Fault Counter Delay	Low Pass Filter
1.	V_1-V_3	100 mV	14 ms	
2.	αV_2-$(V_1+V_3)/2$	100 mV	14 ms	
3.	V_4-V_6	100 mV	14 ms	
4.	βV_5-$(V_4+V_6)/2$	100 mV	14 ms	
5.	$V_{lead\ out}$	100 mV	14 ms	
6.	$V_{lead\ in}$	100 mV	14 ms	
7.	$V_{bus\ out}$	100 mV	14 ms	
8.	$V_{bus\ in}$	100 mV	14 ms	
9.	$V_{bus\ mid}$	100 mV	14 ms	
10.	V_d to Ground	30 V	14 ms	
11.	Quench Com Loop	1 V		60 Hz

Secondary Trip Thresholds

	Channel	Voltage Threshold	Zener Diode Filter	Low Pass Filter
1.	Coil1 – C_0*Coil2	500 mV	1.8 V	30 Hz
2.	Coil1 + C_0*Coil2	8 V	1.8 V	30 Hz
3.	Quench Com Loop	TTL		

The data in the following slides was taken under the following conditions:

- HTS Coils were energized
- LTS Power supply was controlling current at 0
- The protection system was active
- All normal zones were initiated by the heaters and not spontaneous
- Faults occurred at roughly 5 T

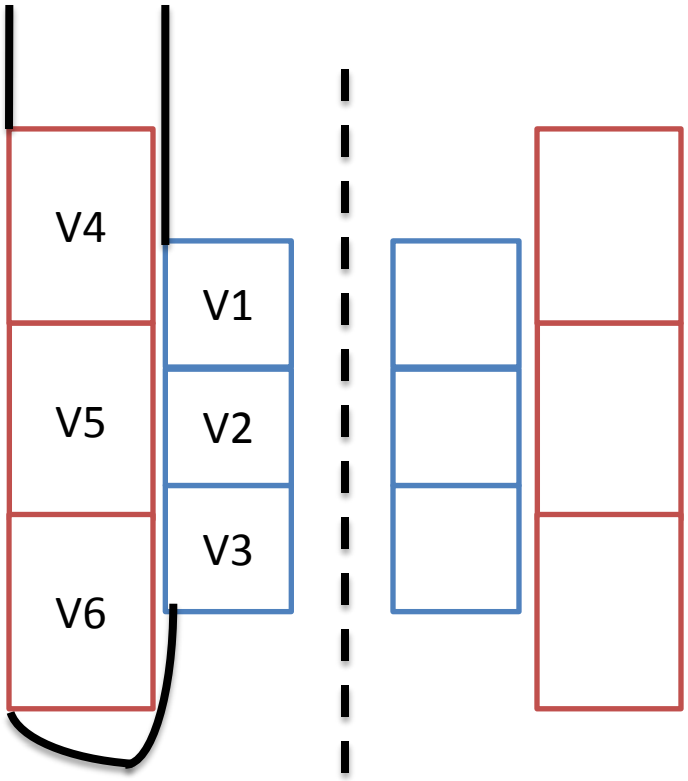

47.6 A Trip – Fault Signal

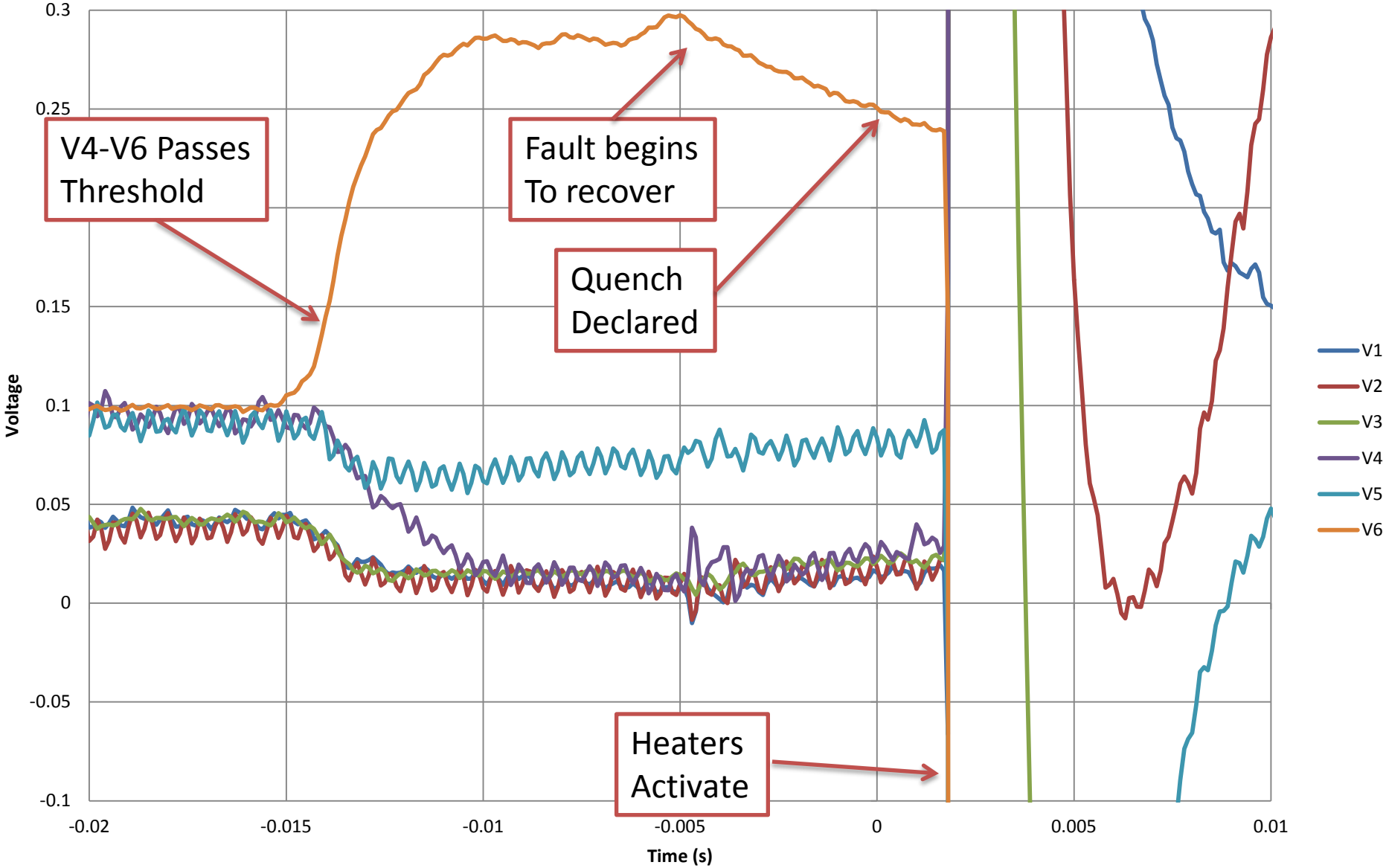

47.6 A Trip – Normal Zone Development

NATIONAL HIGH MAGNETIC FIELD LABORATORY

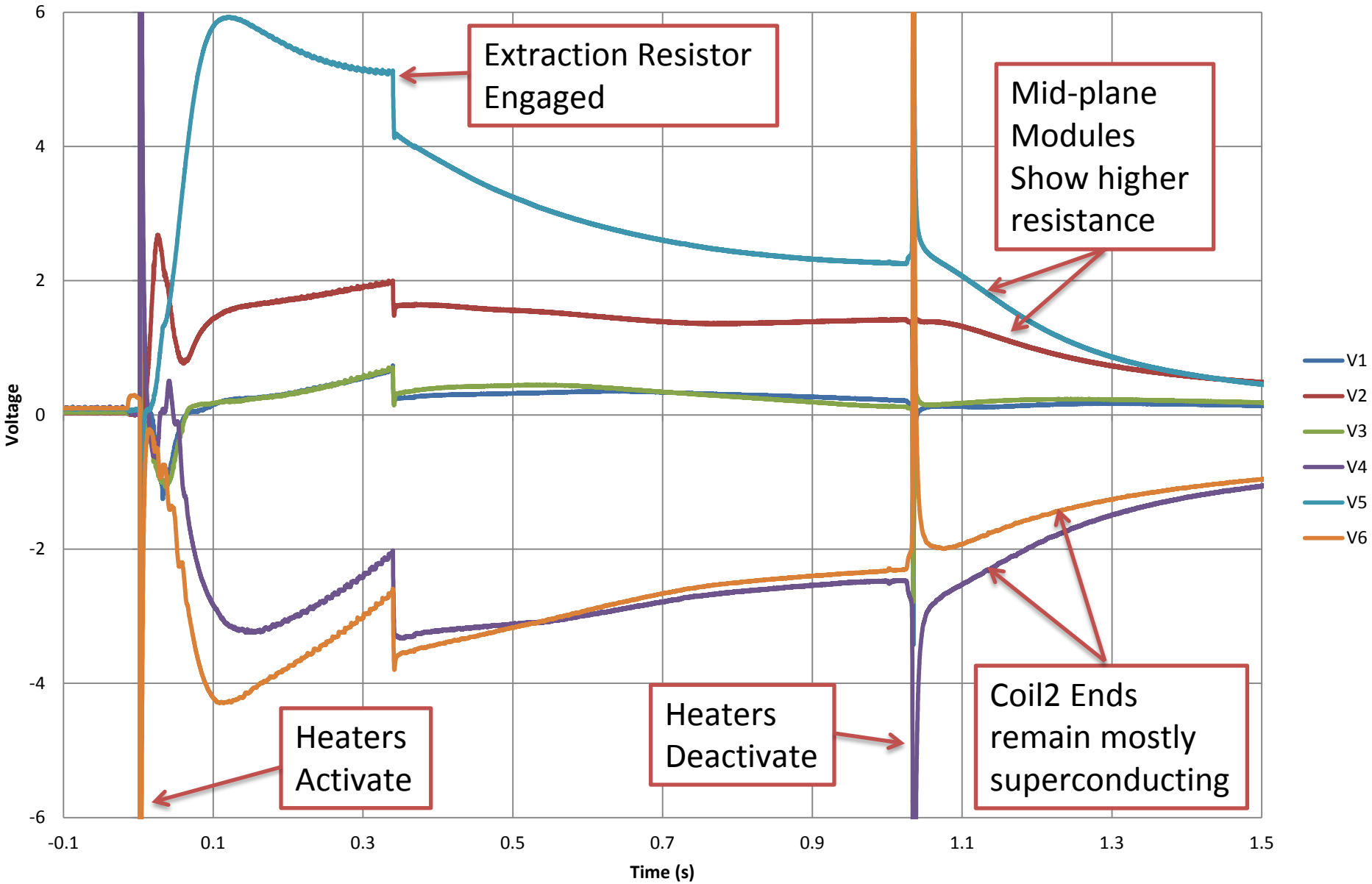

47.6 A Trip - Evolution

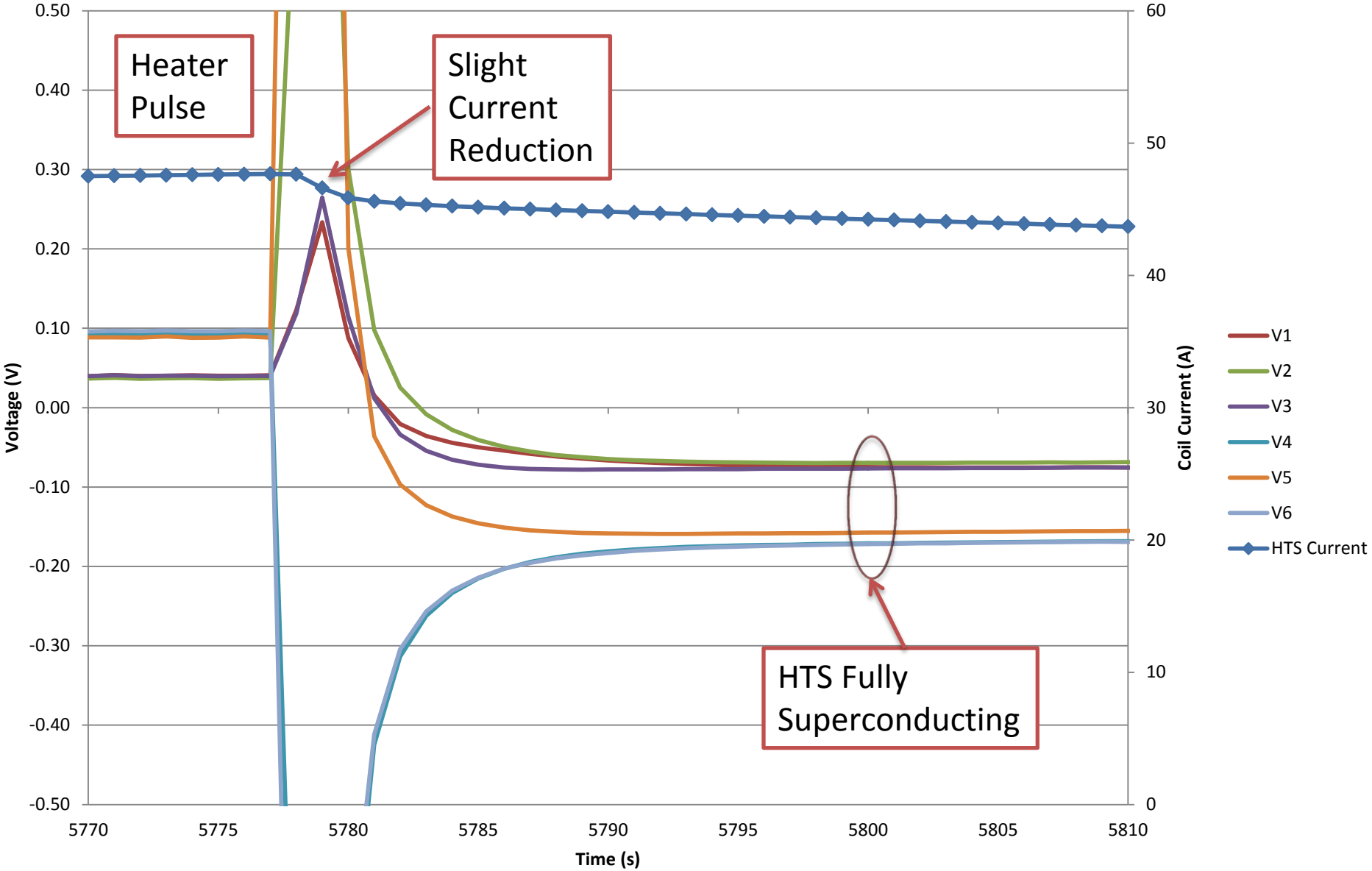

51.2 A Trip – Evolution

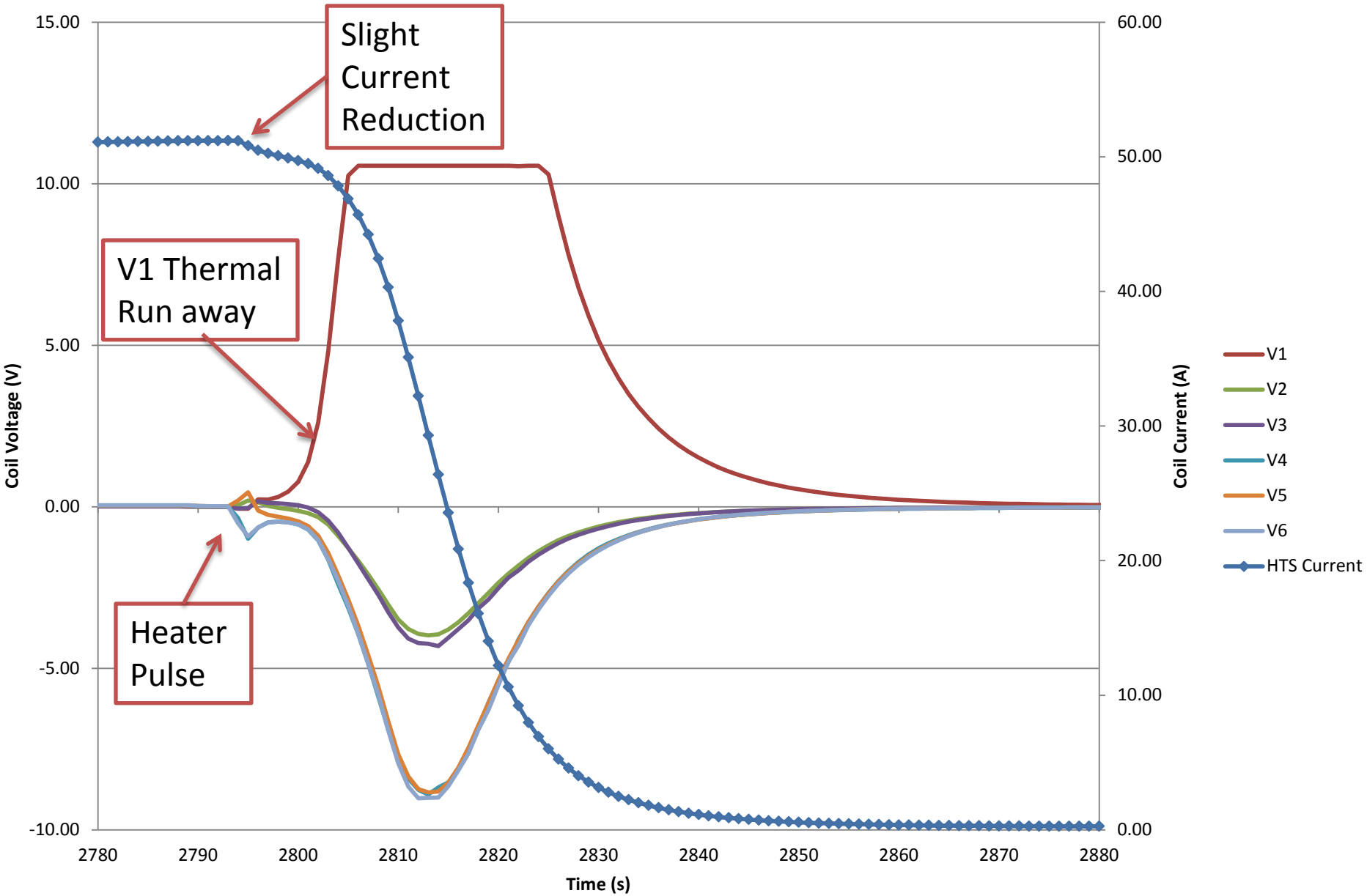

Conclusion

NATIONAL HIGH MAGNETIC FIELD LABORATORY

- Quench Protection System and Interlocks are working as designed
- Mechanical motion has been observed and activated the protection system
- Heater Current is slightly low – more batteries will be added for a total of 36
- The current at which the heaters begin to be effective is close to prediction
- Only a limited fraction of I_c has been reached in the conductor
- No damage has been observed