MT25
25th International Conference on Magnet Technology
RAI - Amsterdam
August 27 - September 1, 2017

No. MT25-Tue-Af-Po2.11-11

25th International Conference on magnet Technology, August 27 – September 1, 2017
RAI Amsterdam, Netherland

Design Considerations and Characteristics of Different Antenna Arrays for Wireless Power Charging System in MAGLEV Train

Yoon Do CHUNG[A*], Chang Young LEE[B], Young Gun PARK[C]
Suwon Science College[A], Korea Railroad Research Institute[B], Yonsei University[C]
[*Corresponding Author : ydchung@ssc.ac.kr*]

1. Introduction

1.1. Practically, since conventional power supply unit should be attached to HTS magnet in the MAGLEV, a large thermal loss is indispensably caused by power transfer wires and joints, those have been one of essential obstacles in the superconducting MAGLEV train.

1.2. As the wireless power transfer (WPT) technology based on strongly resonance coupled method realizes large power charging without any wires through the air, there are advantages compared with the wired counterparts, such as convenient, safety.

1.3. However, it has obstacles to commercialize such as delivery distance and efficiency. To solve the problems, we proposed the technical fusion using HTS resonance coil in the WPT system.

1.4. In this study, we showed the conceptual design of HTS receiver with multi copper antennas. The priority characteristics of moving HTS receivers under multi copper antennas are compared with and various copper receivers with radio frequency (RF) power of 370 kHz below 300 W.

2. Mechanism & Structure

2. 1 Wireless Power Charging Unit in the MAGLEV

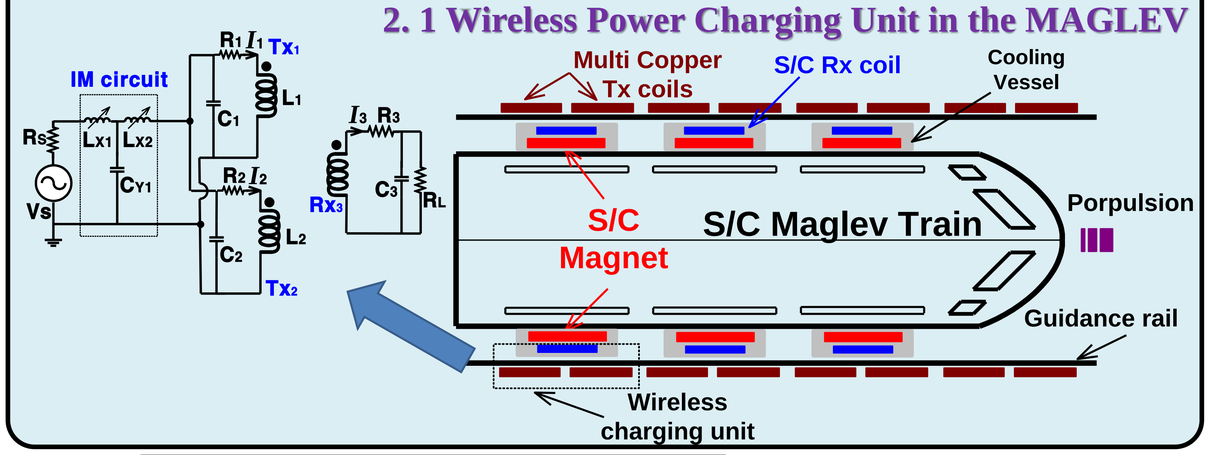

3. Measured EMF Distributions

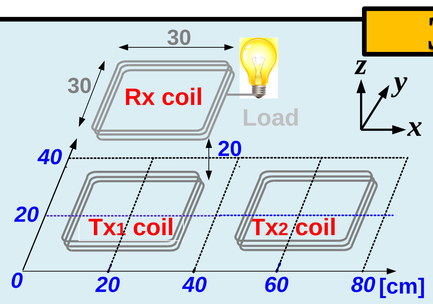

(3-a) Array of multi Tx coils and Rx coil

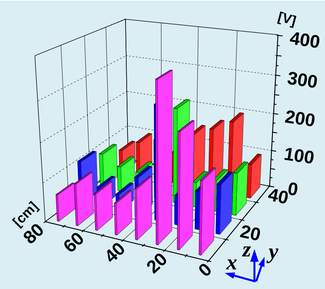

Voltage Distributions of (3-a)

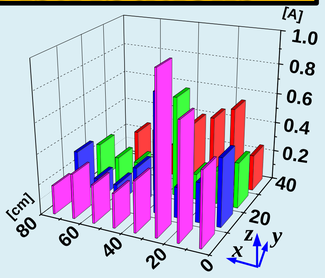

Current Distributions of (3-a)

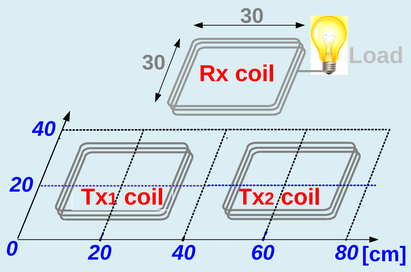

(3-b) Array of multi Tx coils and moving Rx coil

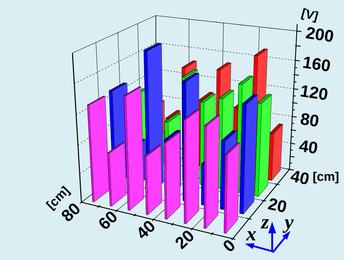

Voltage Distributions of (3-b)

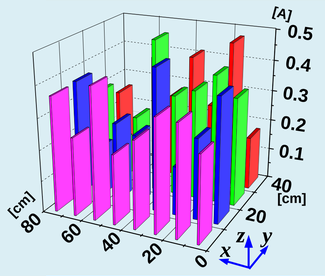

Current Distributions of (3-b)

4. Experimental Setup

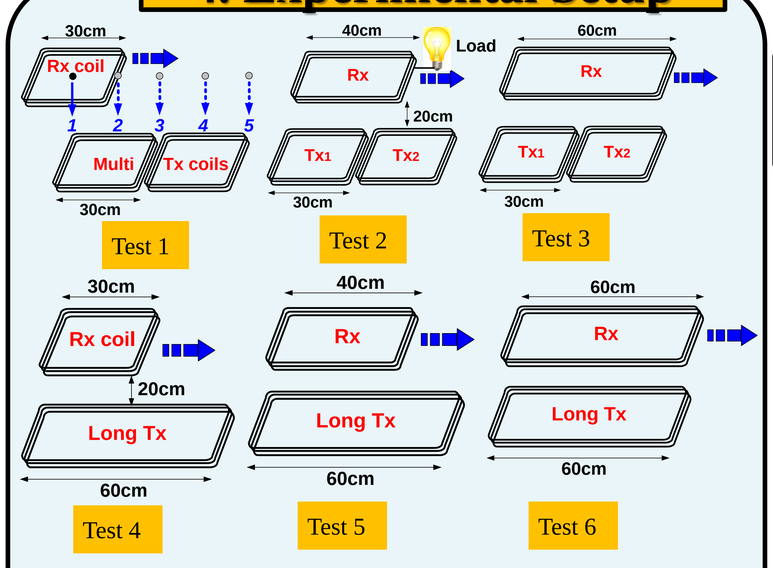

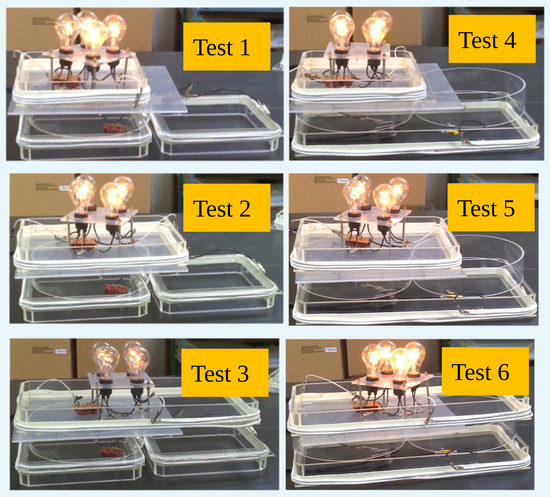

5. Experimental Results

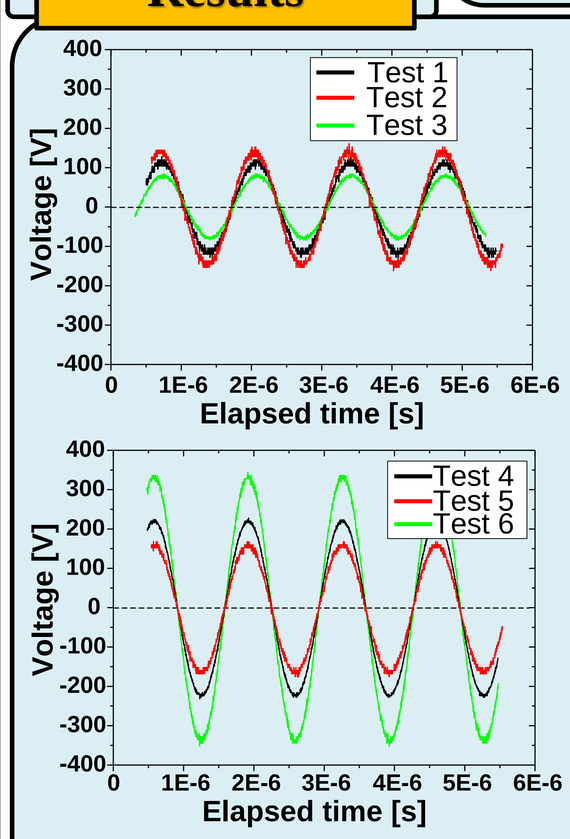

Measured voltage distribution of Rx coil

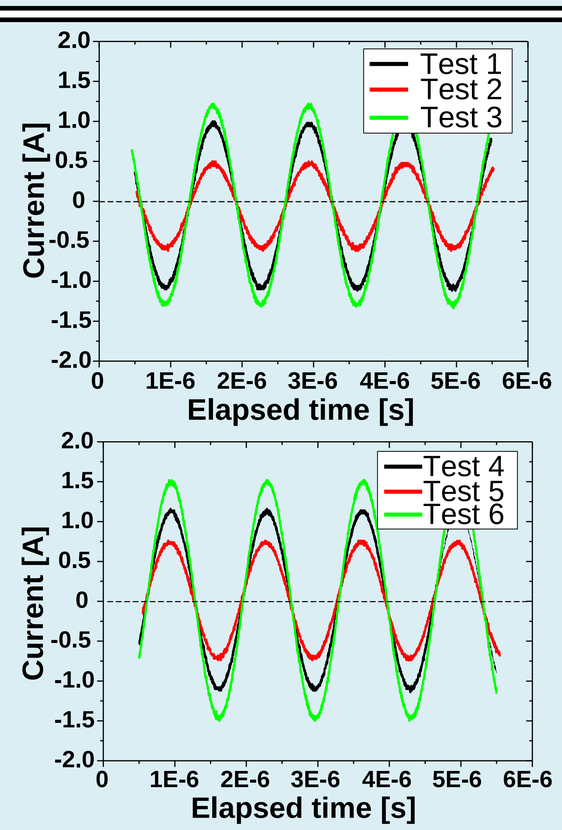

Measured current distribution of Rx coil

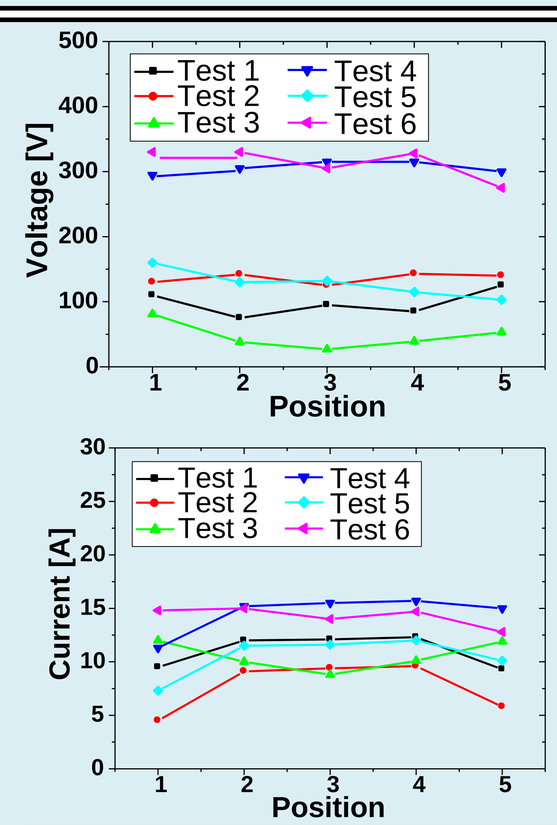

Measured voltage and current distribution of Rx coil in the different position marked at Setup.

7. Conclusions

1. **In this paper, authors investigated wireless power charging distribution and EMF distribution in the different array for multi-array Tx coils under traveling conditions.**
2. **Authors successfully achieved current and voltage distributions in the air space between Tx and Rx coils using NARDA measurement system. Based on the results, the EMF pattern between Tx and Rx coils can be efficiently calculated in the wireless power charging system for MAGLEV train.**
3. **The design parameter of structures for multi Tx coils and single Tx coil corresponding to moving Rx position. Additionally, it is confirmed that the long Tx coil keeps higher efficiency over 2 times compared with same size multi antenna.**

This work was supported by the Basic Science Research Program through the National Research Foundation of Korea (NRF) funded by Korean Ministry of Education, Science & Technology (MEST) (Grant: 2015R1D1A1A01058286).