RF Upgrade Paths

R. Calaga, J. Esteban Müller, E. Jensen , E. Shaposhnikova

… and special thanks to
P. Baudrenghien, A. Butterworth, W. Höfle, G. Kotzian, K. Li,
E. Montesinos, K. Schirm, H. Timkó, R. Tomás, D. Valuch

LHC Performance Workshop (Chamonix 2016)
28-Jan-2016

Outline

- The baseline HL-LHC upgrade
- How does the full detuning scheme affect crab cavity operation?
- What are the risks/limitations of the baseline?

- Harmonic systems:
  - Alternative A: 200 MHz + 400 MHz
  - Alternative B: 400 MHz + 800 MHz
- Do we need an upgraded transverse damper (ADT)
- Conclusions

Baseline RF systems for HL-LHC (1):

Existing 400 MHz system "ACS-400" (+ Crab Cavities 400 MHz "ACF"+ Existing Transverse Damper system "ADT")

- Nominal beam parameters "HL-LHC 25 ns standard":
  - $N_b = 2.2 \cdot 10^{11}, n_b = 2748, I_b = 1.1\ \mathrm{A}, \varepsilon_L = 2.5\ e\mathrm{Vs},\ \sigma_L = 7.55\ \mathrm{cm}.$
- ACS-400 nominal:
  - 8 single-cell cavities per beam, $2\ \mathrm{MV}$ per cavity, $\leq 300\ \mathrm{kW}$ per cavity, CW.
  - Controlled longitudinal ε BU by a factor 6 using band-limited phase noise.
- **But**: 1.1 A beam transient beam loading with half-detuning would require $560\ \mathrm{kW}$ per cavity!
- Mitigate using **optimal (full) detuning**!
  - Reduces required power to $\leq 200\ \mathrm{kW}$ per cavity (klystron)
  - Results in bunch arrival time variation by $\approx \pm 50\ \mathrm{ps}$ $(7.2°, 15\ \mathrm{mm})$
  - Was tested in past MD's – still to be fully validated in physics!

Baseline RF systems for HL-LHC (2):

- Since we do not have HL-LHC beam today, we can not yet fully validate beam stability limits, but we're about OK.
- Subsystems and components (cavities, couplers, amplifiers,…) will age already before and during HL-LHC – this requires an additional effort in maintenance and consolidation.
- The same is true for the Transverse Damper system ADT.

Baseline RF systems for HL-LHC (3):

- *RF Systems Consolidation – ongoing:*
  - *Existing spare module fully validated (→ Andy's talk)!*
  - *4 new dressed cavities under development*

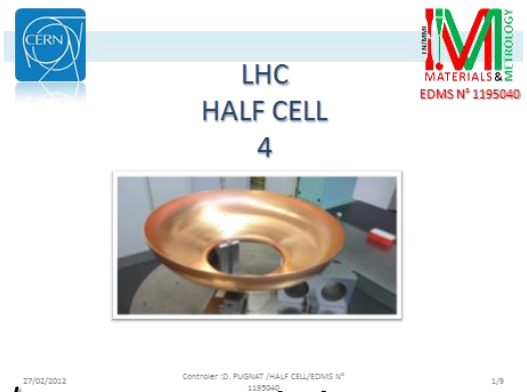

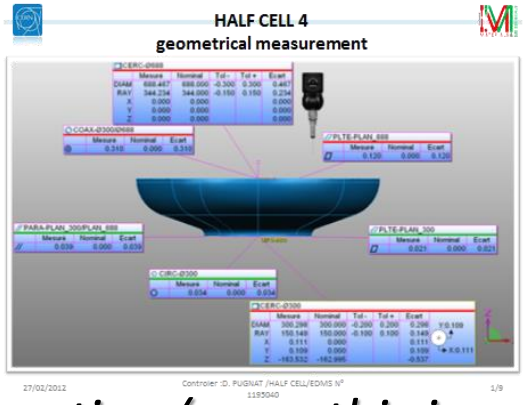

K. Schirm, M. Karppinen

- *A 2nd spare module is in construction (yes – this is a priority!)*
- *P4 cryogenic upgrade in progress*
- *Potential replacement of power couplers & HOM couplers (aging, ?)*
- *Regular replacement of HV and klystrons …*

Concern: Lifetime of power couplers (FPCs)?

- 16 (variable) high power couplers in operation in LHC, 8 spares available, tested to 330 kW max.
- Start of HL-LHC is in 10+ years →
  - Replacement of couplers!

Change of FPC takes months!

  - Plan to build roughly 1/year now! (necessary consolidation!)

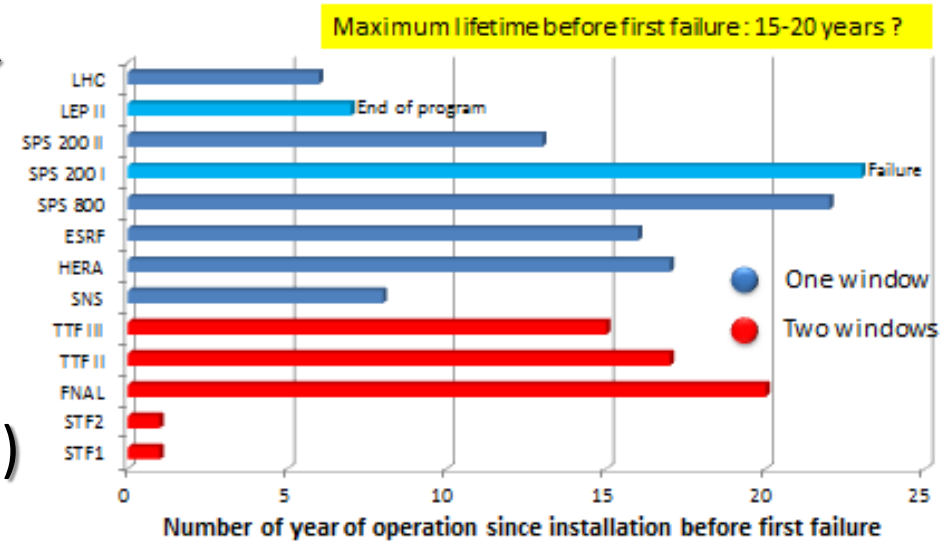

E. Montesinos

Planning ACS-400 MHz (checked with K. Schirm)

- *Ongoing: Fabrication of 4-8 Spare Dressed Cavities (Fabrication, sputtering, joining, dressing, assembly, tests)!*
- *Finish 2nd spare module – **it should be ready after LS2 in case of urgency!***

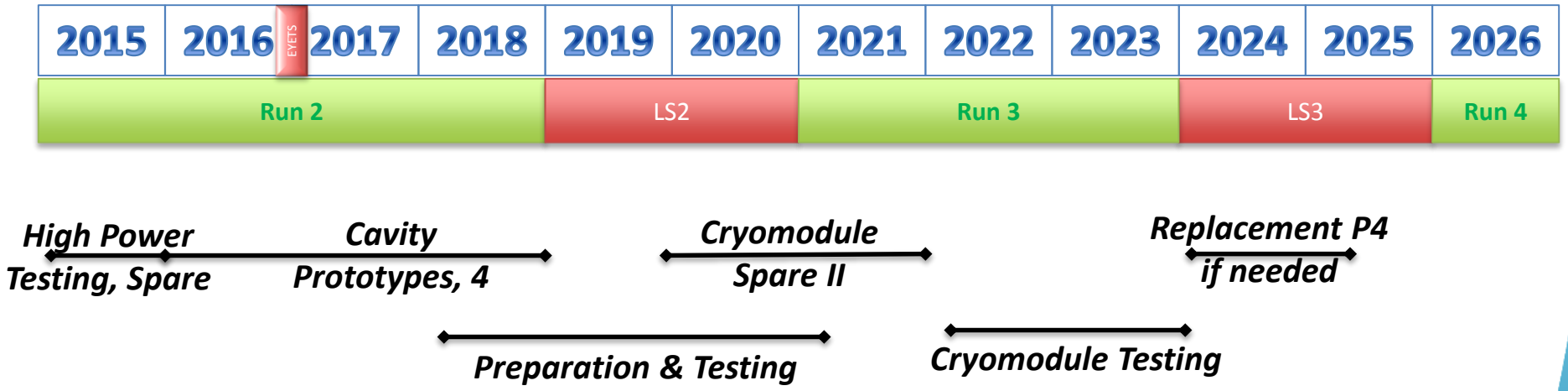

Crab cavity and full detuning

… replying to a question by Oliver Brüning on Monday

Bunch crossing with non-zero X-ing angle

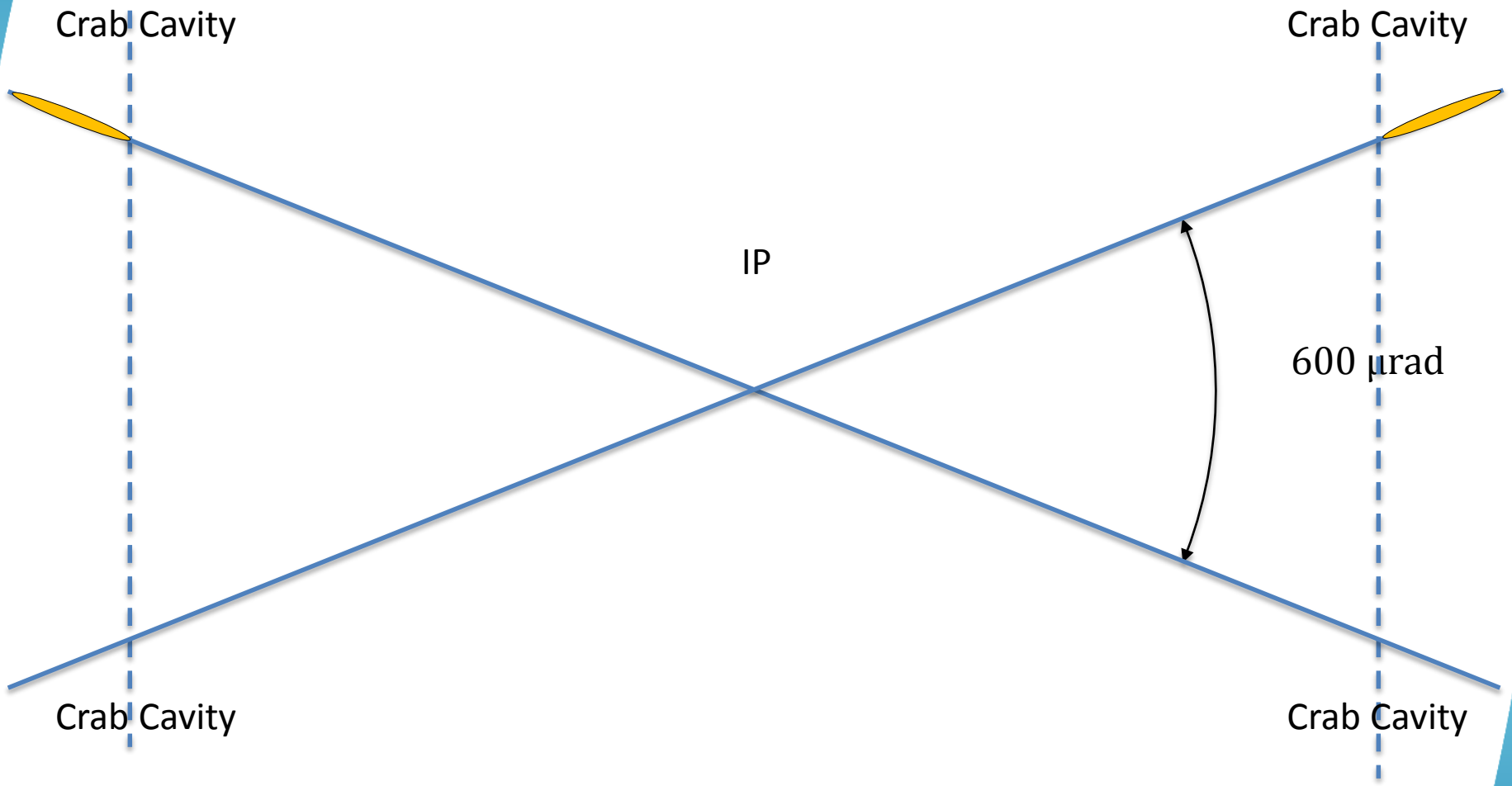

Effect of Crab Cavity

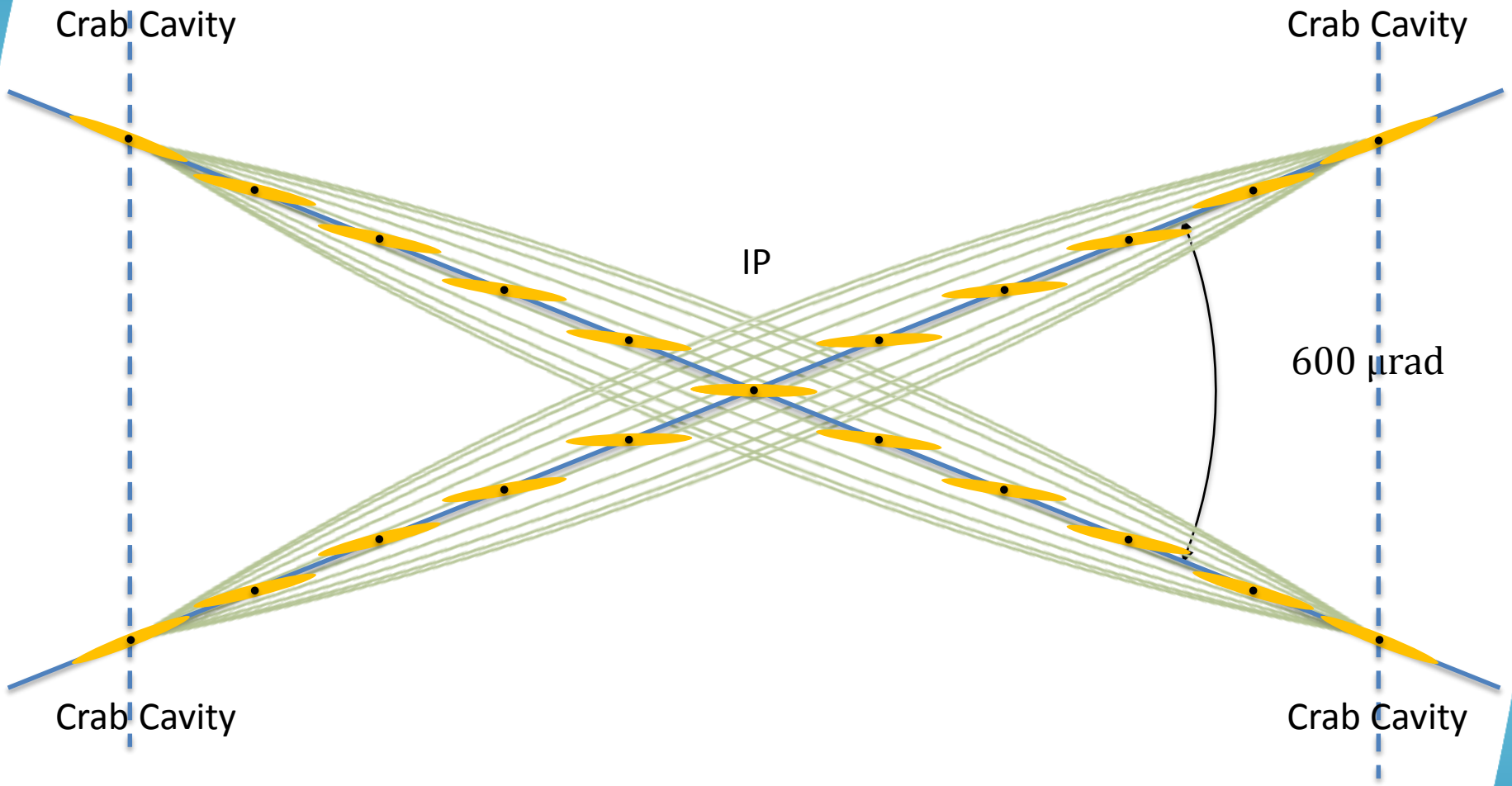

Effect of Crab Cavity with late bunch arrival (symmetric)

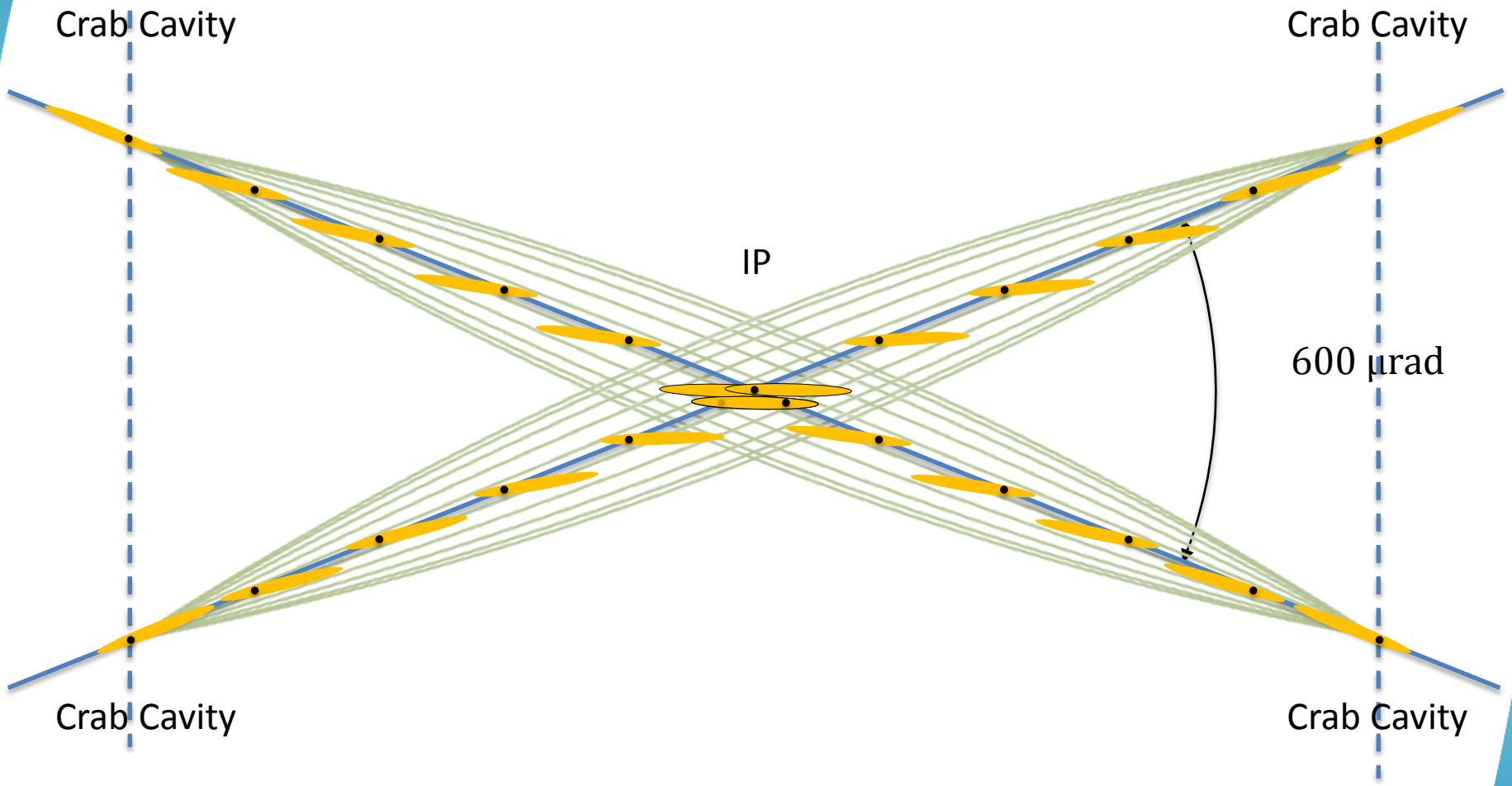

No loss of $\mathcal{L}$ to first order – slight transverse offset

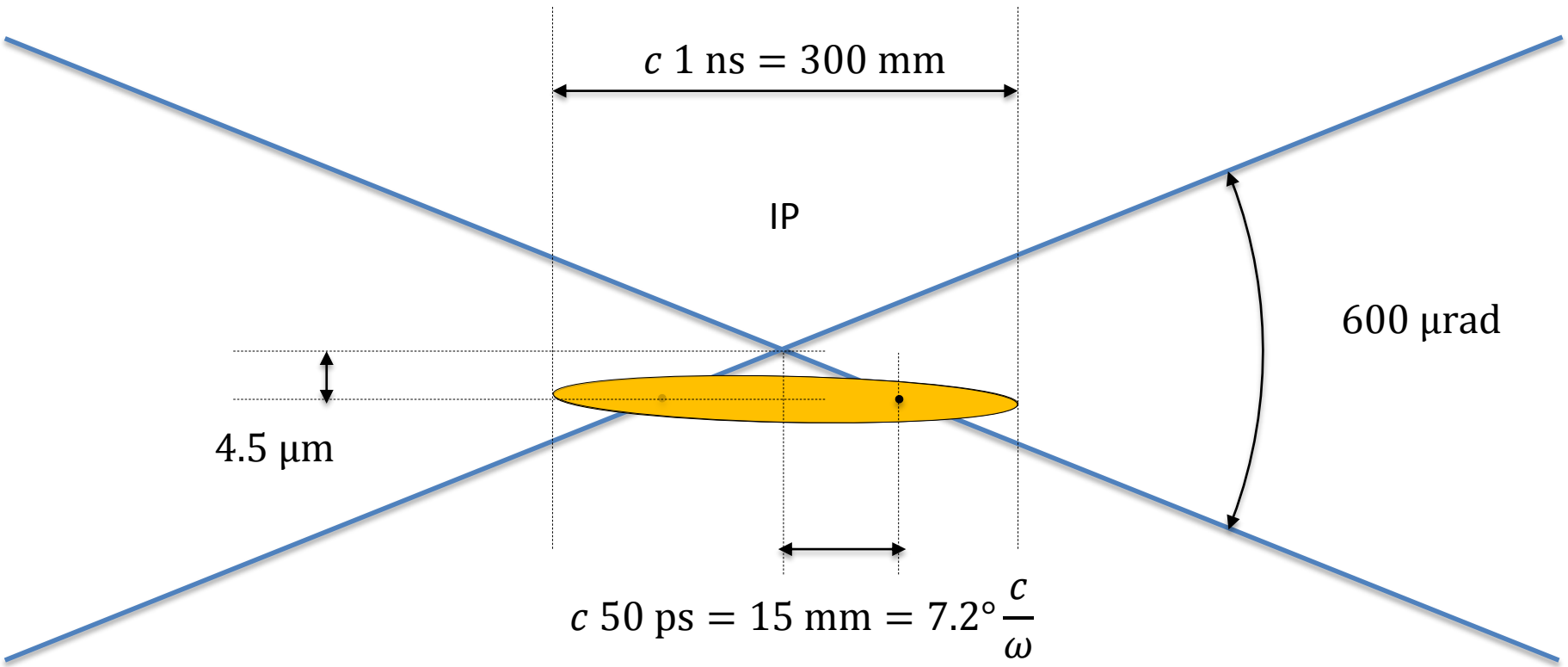

transverse offset: $\frac{\vartheta_c}{2} \Delta\varphi \frac{c}{\omega}$

Effect of Crab Cavity with phase error (asymmetric)

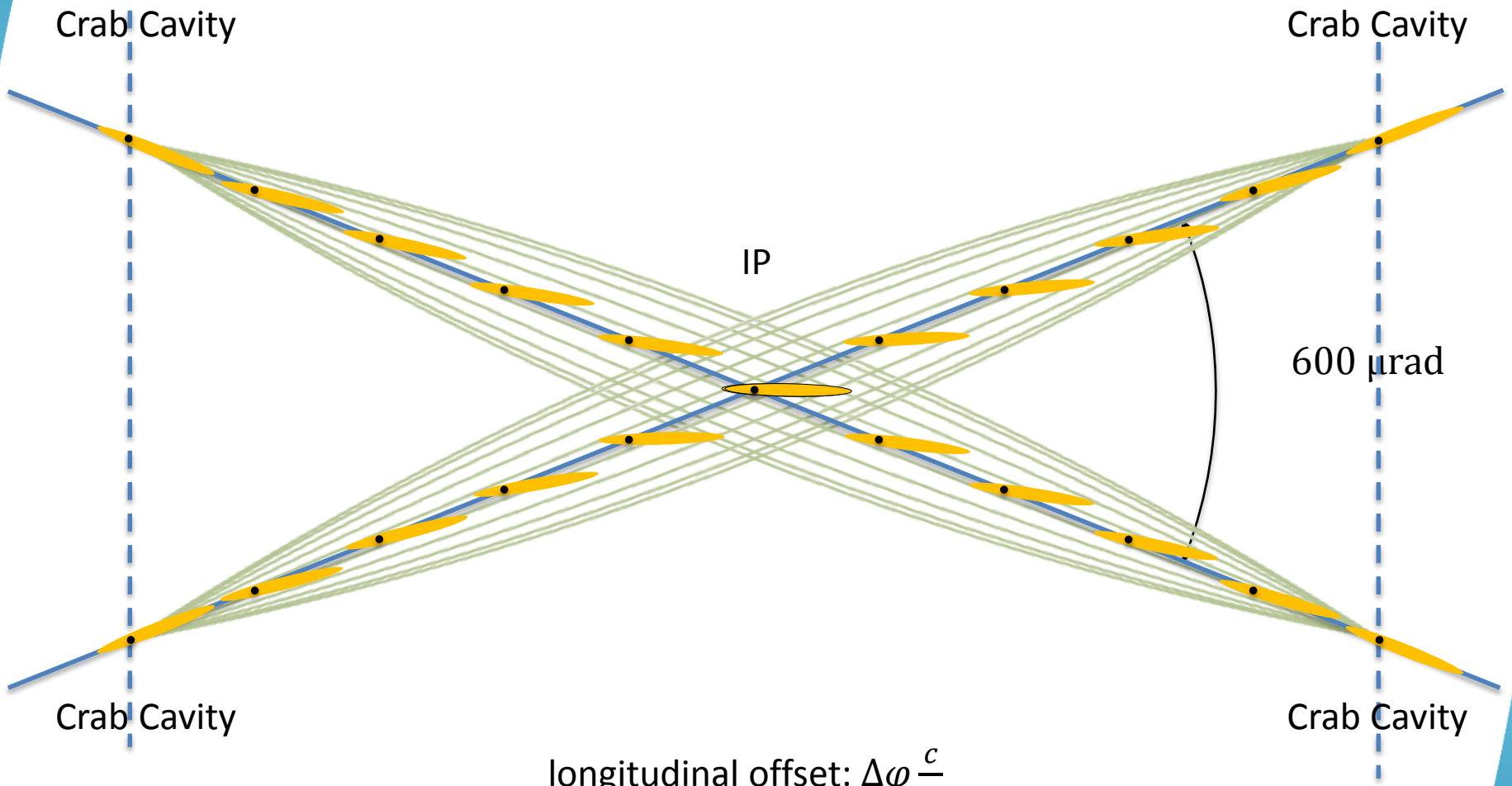

longitudinal offset: $\Delta\varphi \frac{c}{\omega}$

$$c\ 50\ \mathrm{ps} = 15\ \mathrm{mm}$$

Risks/limitations of baseline

Limits of the baseline – reasons to study options:

Is the full detuning scheme fully OK for experiments?

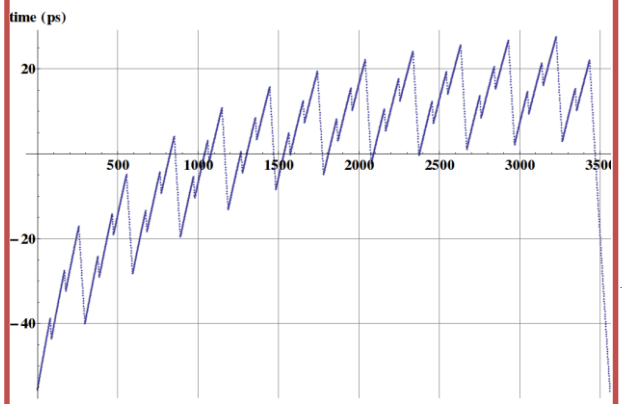

Have to cope with arrival time variations ± 50 ps.
No axial offset of vertex if perfectly symmetric.

Must be tested in 2016!

Philippe, 25-Jan-16

We are close to single bunch stability limits for short bunches!

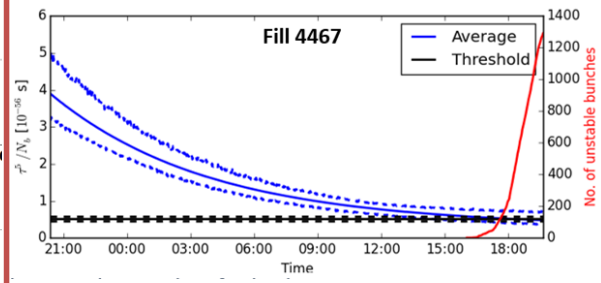

Short bunches become unstable – at about the expected threshold.

$$Z_{th} \propto \frac{\tau^5}{N_b}$$

LHC impedance will be $\approx 40\%$ larger than today!

Longitudinal BU with single h system is not very robust.

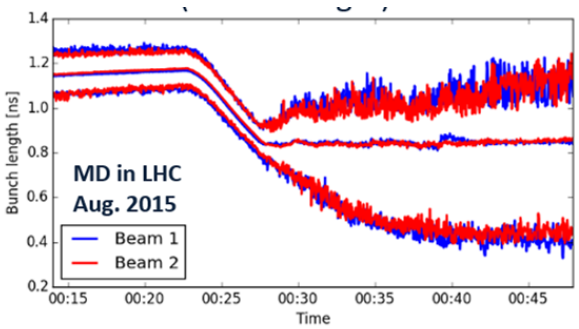

Longitudinal BU by noise injection/phase modulation critically depends on equal bunches – bifurcation behaviour observed in MDs!

Juan, LIU/HiLumi 15-Oct-15

HL-LHC RF, Harmonic Systems

- *Longitudinal beam stability (voltage ratio = 0.5): min emittance*

	N_b	Single RF	BSM	BLM
Alternative A: **6 MV @ 200 MHz** **+ 3 MV @ 400 MHz**	$(2.2 \ldots 2.4) \cdot 10^{11}$	3.25 eVs (1.8 ns)	2.38 eVs (1.31 ns)	0.70 eVs (1.25 ns)
Alternative B: **16 MV @ 400 MHz** **+ 8 MV @ 800 MHz**	$2.2 \cdot 10^{11}$	2.16 eVs (0.97 ns)	1.72 eVs (0.77 ns)	~0.45 eVs (0.65 ns)

Alternative A: 6 MV @ 200 MHz (+ 3 MV @ 400 MHz)

- *Main RF System* $200\ \mathrm{MHz}$, *($\lambda/4$-Cavity, to be studied!)*
  - *4-cavities/beam,* $V = 1.5\ \mathrm{MV}$*/cavity,* $P \leq 450\ \mathrm{kW}$
  - *Minimum bunch length* $1.3\ \mathrm{ns}$*,*
  - *A maximum of 1 ACS-400 module needed (*$3\ \mathrm{MV}$ *total)*
  - *Compatible with 400 MHz crabs → R. Tomas: (-8% @*$2.2 \cdot 10^{11}$*)*

- *Interest of this option:*
  - *New bunch length regime of operation with higher current (*$1.24\ \mathrm{A}$*)*
  - *Could allow to return to ½-detuning if preferred.*
  - *Mitigate e-cloud, RF heating, IBS, SPS-LHC transfer + <u>emittance blow-up</u>*
  - *Facilitate longer bunches injection from SPS (→ Brennan's talk)*
  - *What can SPS deliver? Ready for* $2.5 \cdot 10^{11}$ *protons/bunch!*
  - *BL-& BS-modes feasible with existing ACS module as 2nd harmonic*
  - *Allows recapturing with 400 MHz (4 h into physics, when* $1.5 \cdot 10^{11}$ *left)!*

200 MHz cavities ($\lambda = 1.5$ m!) require R&D!

- First ideas: ¼-wave cavities – (smaller than present 400 MHz!)

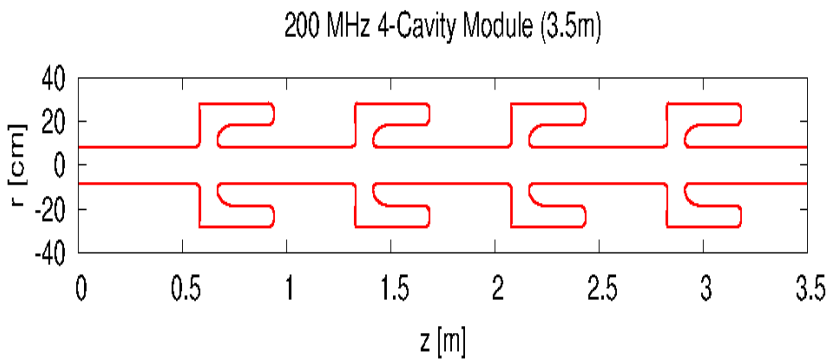

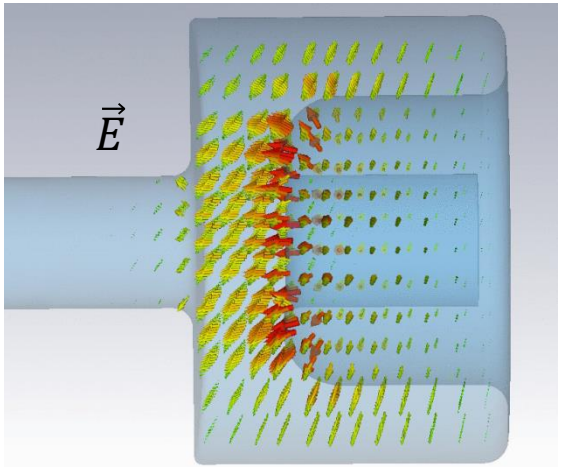

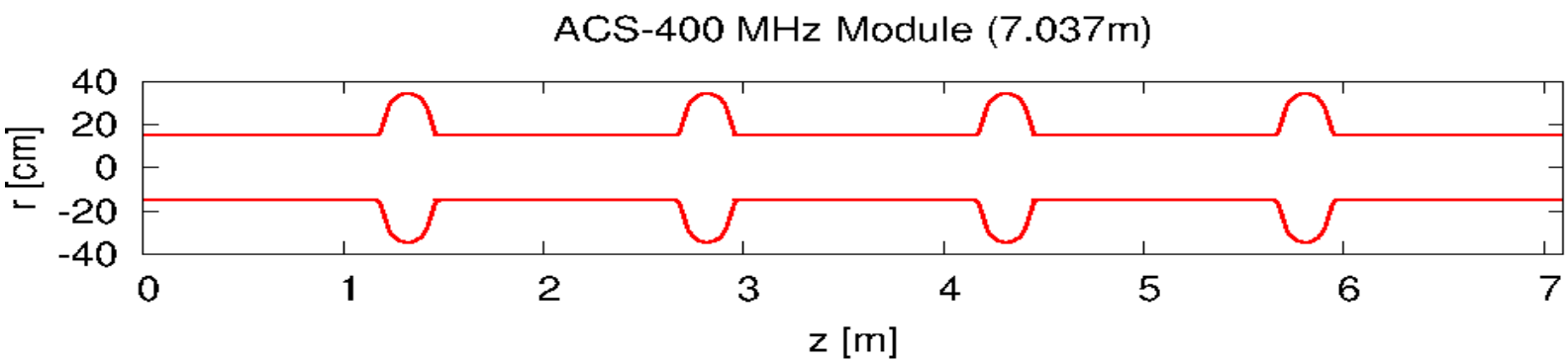

Alternative A (200 MHz) - planning

- *Design & Prototyping phase → Feasibility!*
- ***To keep this as a valid option, feasibility study should conclude before LS2!***

200 MHz
(4-Modules)

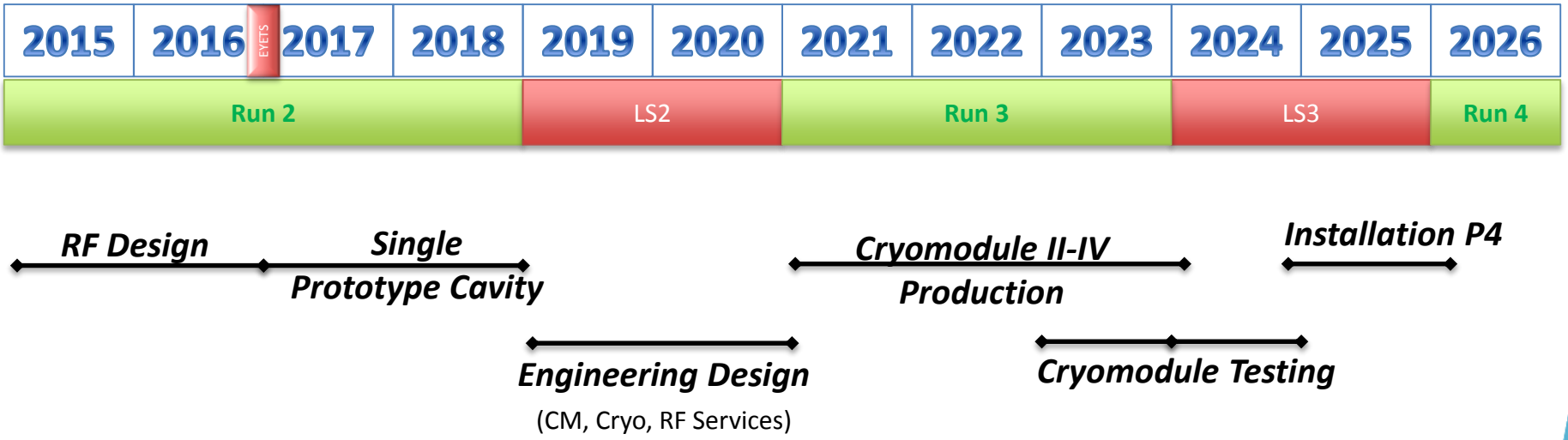

Alternative B: (16 MV @ 400 MHz +) 8 MV @ 800 MHz

- *Main RF System ACS-400 + 800* MHz voltages
  - *4 additional cavities/beam,* $2\ \mathrm{MV}$*/cavity* .
    with $V = 1\ \mathrm{MV}$, $P \leq 80$ kW per cavity (in BS-mode).
  - *Minimum bunch length* $0.6\ \mathrm{ns}$, *maximum* $\approx 1.4\ \mathrm{ns}$.

- *Interest of this option:*
  - *Robust emittance blowup with phase modulation*
  - *Could allow to return to ½-detuning if preferred*
  - *Will allow for Landau damping & bunch profile manipulations*
  - *<u>Caveat:</u> Realistically only BS-mode feasible*

Flat bunches in the "bunch shortening mode"?

Encouraging simulation results

Phase noise applied in BS-mode in frequency band $(1.2 \ldots 1.4) f_{s1}$

16 MV @ 400 MHz, 16 MV @ 400 MHz + 8 MV @ 800 MHz, + noise

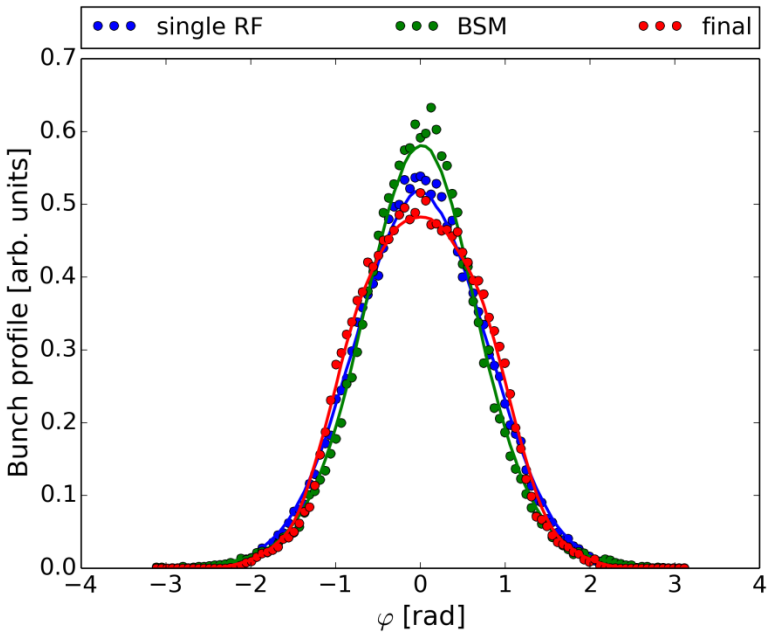

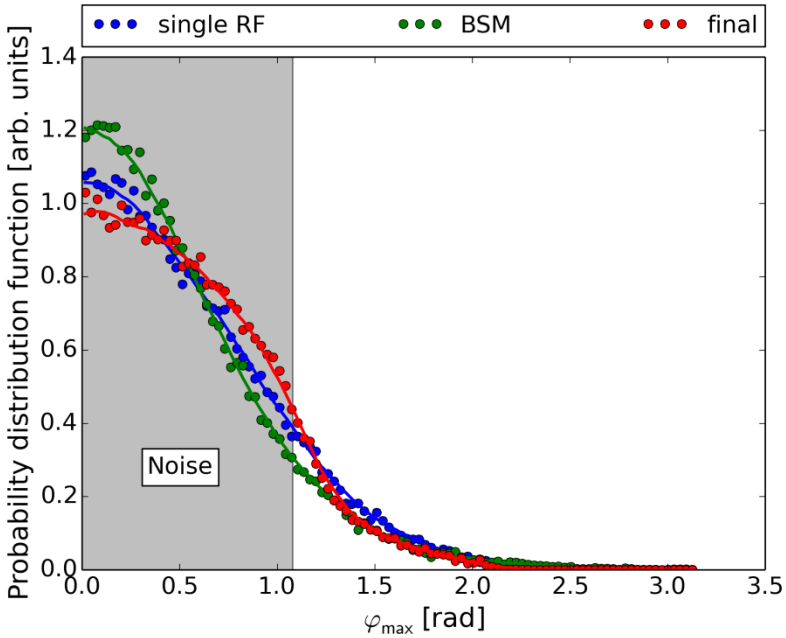

τ_{FWHH}: 1.13 ns → 1.34 ns

H. Timkó

→ **Final bunch is flatter than the initial one in a single RF system!**

Possible Layout

- *800* MHz, *2nd Harmonic*

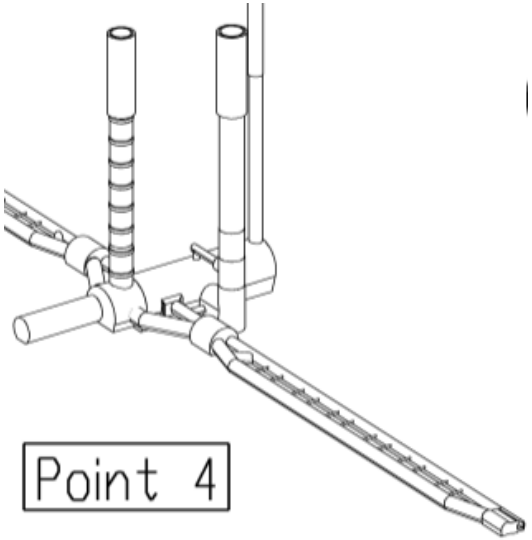

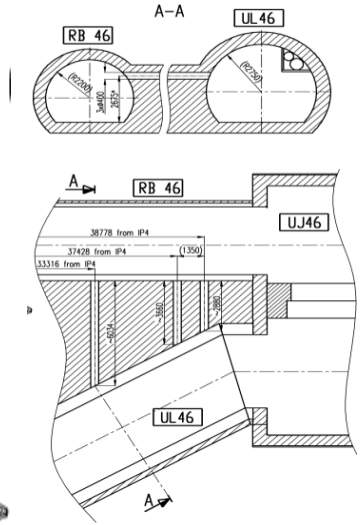

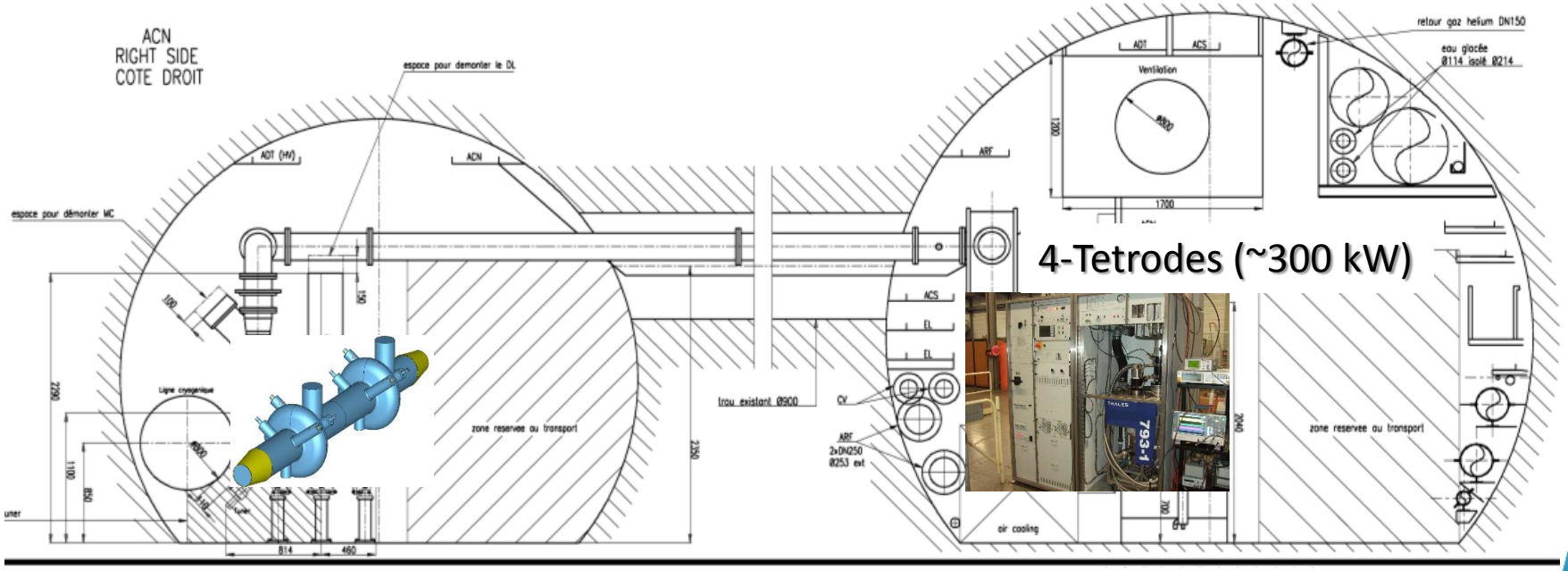

Possible Layout

Fits within QRL constraints with a square cryomodule

Front View

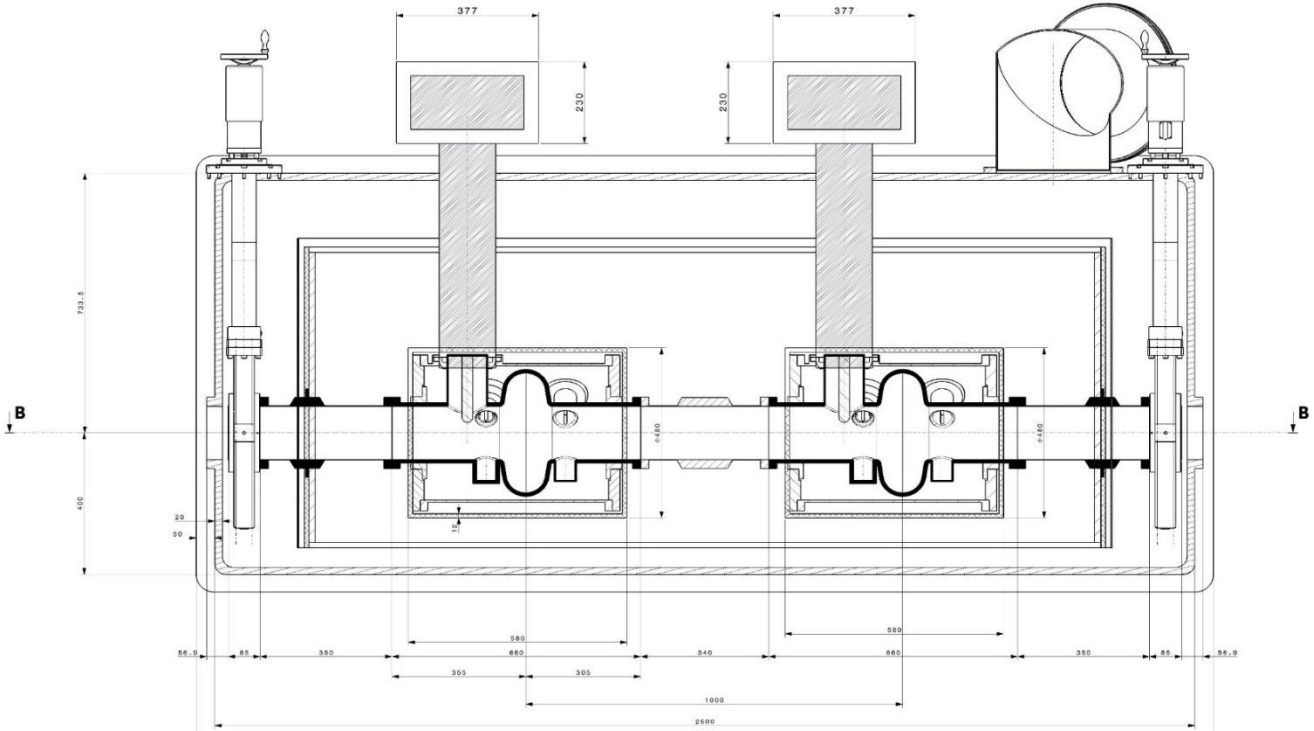

Top View

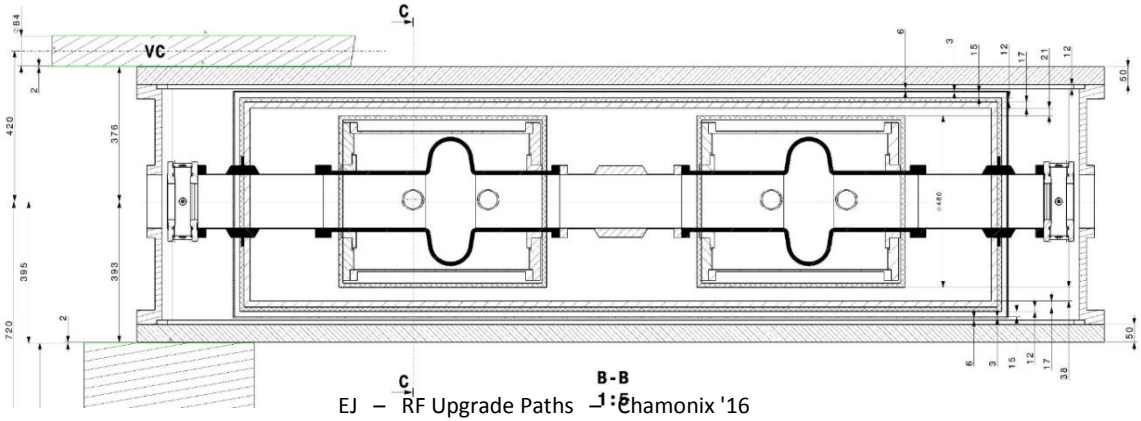

Preliminary CM Integration in P4

Integration with QRL is feasible with rectangular cryostat

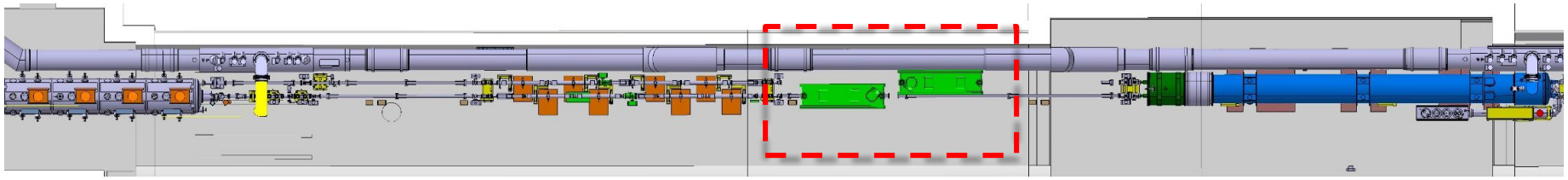

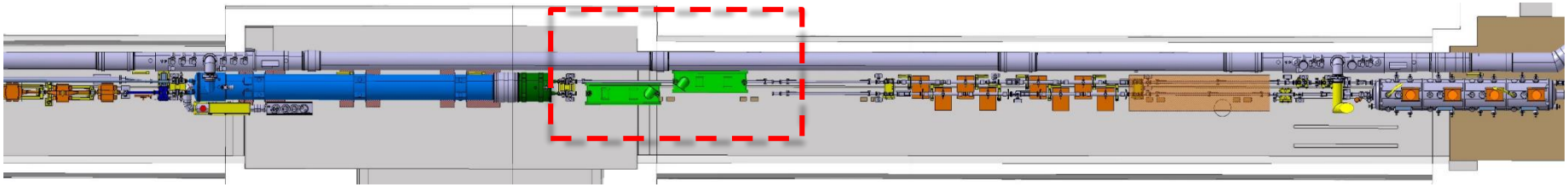

Alternative B (800 MHz) - planning

- *Prototyping Phase*
- *Construction (only 2 modules, one for each beam)*
- ***Need conclusive results of prototype by LS2.***

800 MHz
(2 Modules)

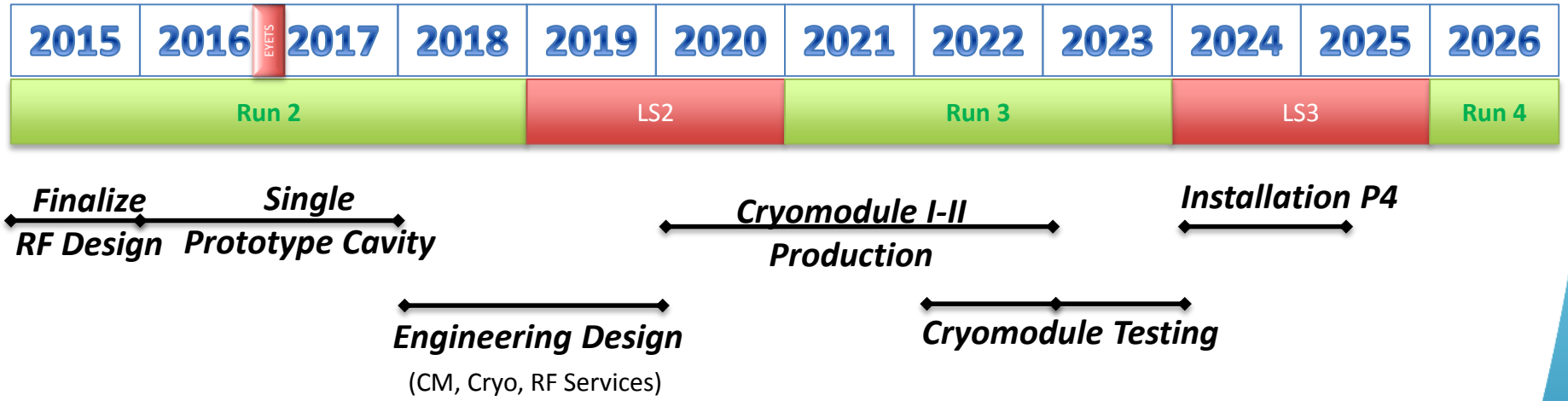

Do we need an upgraded transverse feedback during HL-LHC era?

Transverse feedback – what bandwidth?

from Kevin's presentation Monday:

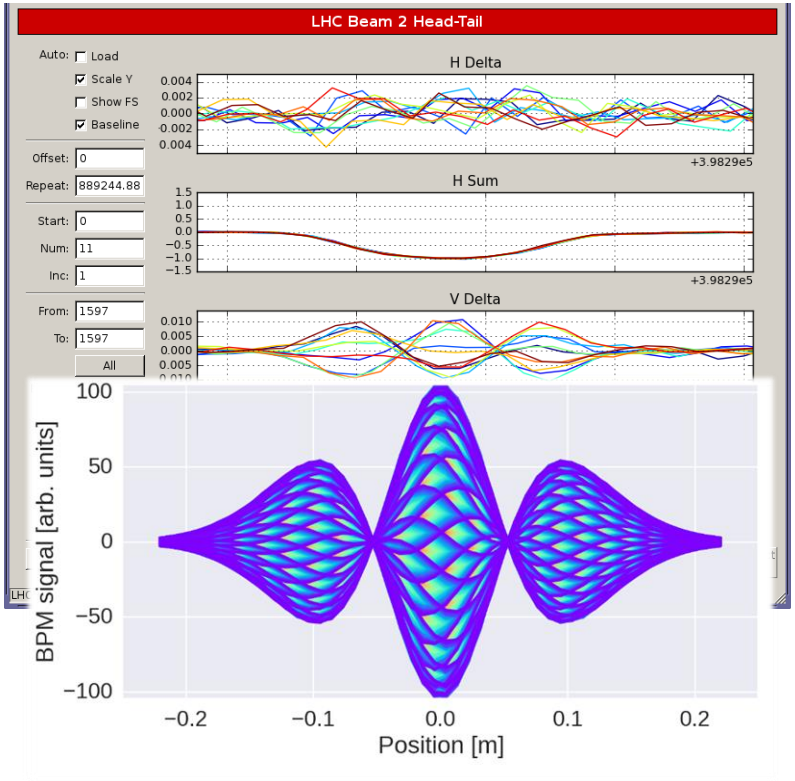

PyHEADTAIL simulation

- Present ADT: up to 20 MHz (limited to bunch-by-bunch)
- It would be great to suppress TMCI instabilities! Tremendous potential!
- In fact - we're almost there:
  - We have the MIM (multi-band Instability monitor) – BW: 3.2 GHz
  - We have fast DAC/ADC and signal processing
  - We are developing wideband kickers!
  - We have the LARP collaboration on the wideband feedback system, to be tested in SPS.
- We should continue/intensify this study!

Potential of SPS wideband development for HL-LHC

Wideband feedback system – scaled to LHC

Kevin Li, Oct 2015

- Damper kick strength/voltage:
  - With 5 m space – consider installation of 4 slotline kickers → V ~ 37 kV with 2 kW amplifiers at 1 GHz
  - Slotline dimensions are smaller for LHC – can gain a factor 2 in kick strength
- Bandwidth:
  - Slotline dimensions are smaller for LHC – can gain a factor 2 in frequency reach

Options:

1. Extension of current system:
   long stripline at 40 MHz for true bunch-by-bunch damping
2. Band-by-band approach:
   Stripline at 400 MHz in combination with slotlines at 800, 1200, 1600, 2000, 2400,… MHz

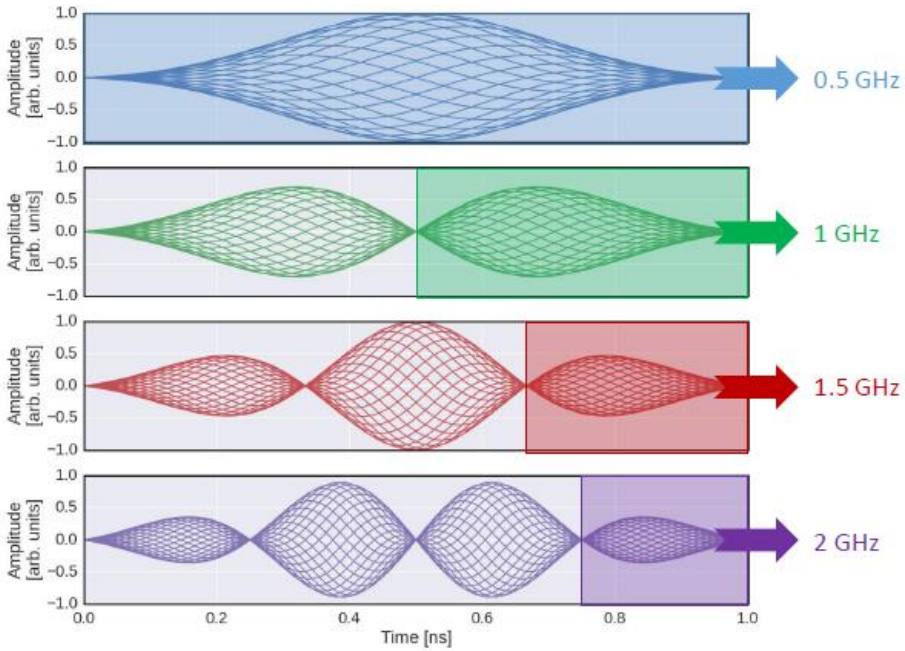

The SPS system is the fundamental research platform for the development of the required technology.
→ all work conducted so far will be crucial to serve as basis for deployment for LHC/HL-LHC.

Conclusions

- The baseline (ACS400 & Crab Cavities & ADT) is valid, but …
- Consolidation program is part of our plan!
- Risks:
  - Aging of power couplers is not known – prepare for failures!
  - Full detuning not yet fully validated in physics run! 2016!
  - Exact multibunch stability limits are not well known,
  - LHC impedance will increase (crabs, IT, …) after LS3,
  - Controlled emittance BU with single harmonic RF is touchy.
- To keep the harmonic systems (200 MHz, 800 MHz) as valid options, studies/prototyping must be continued – to conclude before LS2!
- Priority: validate 200 MHz cavity with a prototype – 800 MHz study well advanced – exploit collaborations and synergy with FCC.
- A wideband (3 GHz BW) feedback seems in reach – its potential is tremendous – the study should be continued!

The end