Science & Technology Facilities Council

The Application of Variable Strength Permanent Magnet Dipoles and Quadrupoles

Jim Clarke, Alex Bainbridge, Norbert Collomb, Ben Shepherd, Graham Stokes

STFC Daresbury Laboratory, UK

Antonio Bartalesi, Michele Modena, Carlo Petrone, and Mike Struik

CERN, Geneva, Switzerland

CLIC Workshop 2016, CERN

20th January 2016

Science & Technology Facilities Council

CERN

Motivation

- The total power consumption of magnets within CLIC is very large
- The judicious application of permanent magnets rather than electromagnets could make a significant reduction in this total power requirement
- The *ZEPTO* – Zero-Power Tunable Optics collaboration between STFC and CERN has considered the optimum families of dipoles and quadrupoles to replace with permanent magnet counterparts to have the biggest impact:
  - The **Drive Beam Quadrupoles** (**13 MW** nominal, **34 MW** max)
  - The **Drive Beam Turn Around Loop Dipoles** (**12.5 MW** nominal)
  - The **Main Beam Ring to Main Linac Dipoles** (**2.5 MW** nominal)
- The application of permanent magnets to accelerators is not new of course but these are almost always fixed field or with only small tuning ranges

Permanent Magnet Option

- Advantages of PM-based adjustable strength magnets
  - Effectively zero electrical power demand
  - Effectively zero operating cost
  - No cooling water required
  - Effectively zero power to air
- Potential issues
  - Radiation damage to PM and motion control system
  - Variation with Temperature
  - Variation between PM blocks
  - Reliability of motion control system

Drive Beam Quadrupoles

- The drive beam decelerates from 2.4GeV to 0.24GeV transferring energy to the main beam

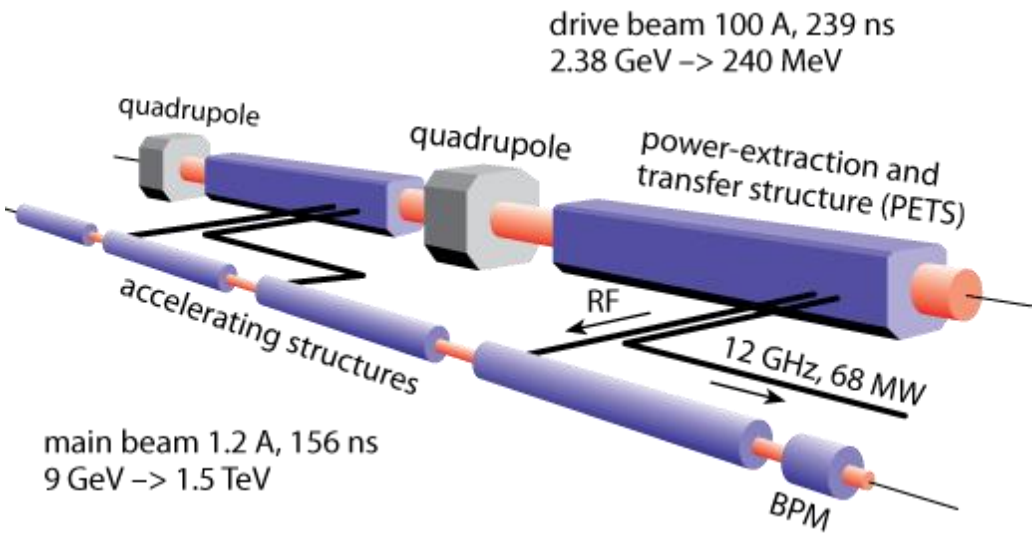

- As the electrons decelerate, quadrupoles are needed every 1m to keep the beam focused
- The quadrupole strengths scale with the beam energy
- The CLIC accelerator length is **~42km** so there are **~42,000** quadrupoles needed

Quadrupole Tunability

- The **nominal** maximum integrated gradient is 12.2T and the minimum is 1.22T
- For operational flexibility each individual quadrupole must operate over a wide tuning range
  - 70% to 120% at high energy (2.4 GeV)
  - 7% to 40% at low energy (0.24 GeV)
- The power consumption for the EM version will be **~13MW** in nominal mode and up to **~34 MW** in tune-up mode

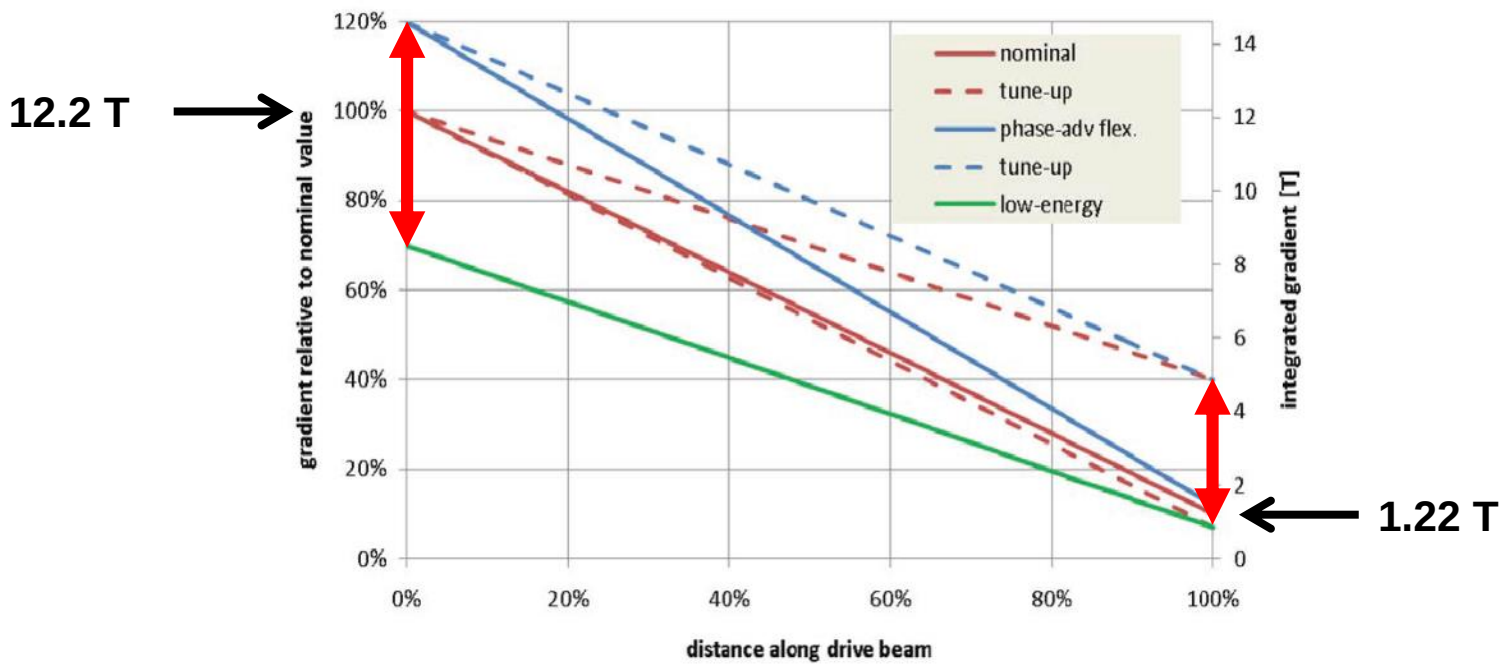

Drive Beam Quads

- The complete tuning range (120% to 7%) could not be met by a single design
- We have broken the problem down into two magnet designs – **one high energy and one low energy**

Quadrupole Types

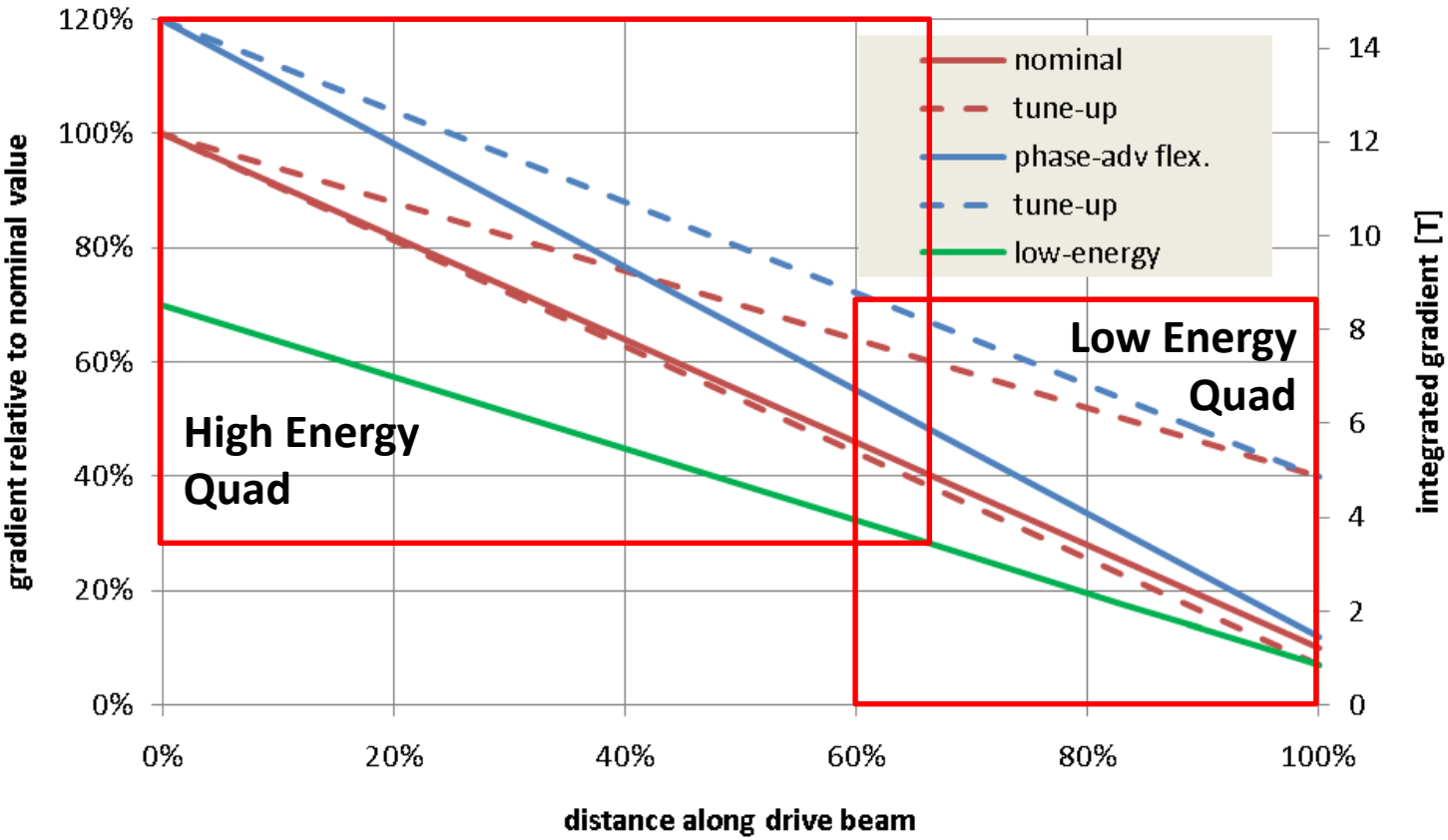

- **High energy quad – Gradient very high**
- **Low energy quad – Very large tuning range**

High Energy Quad Design

- **NdFeB** magnets with **B_r = 1.37 T** (VACODYM 764 TP)
- 4 permanent magnet blocks each 18 x 100 x 230 mm

- Max gradient = **60.4 T/m** (stroke = 0 mm)
- Min gradient = **15.0 T/m** (stroke = 64 mm)
- Pole gap = 27.2 mm
- Field quality = ±0.1% over 23 mm

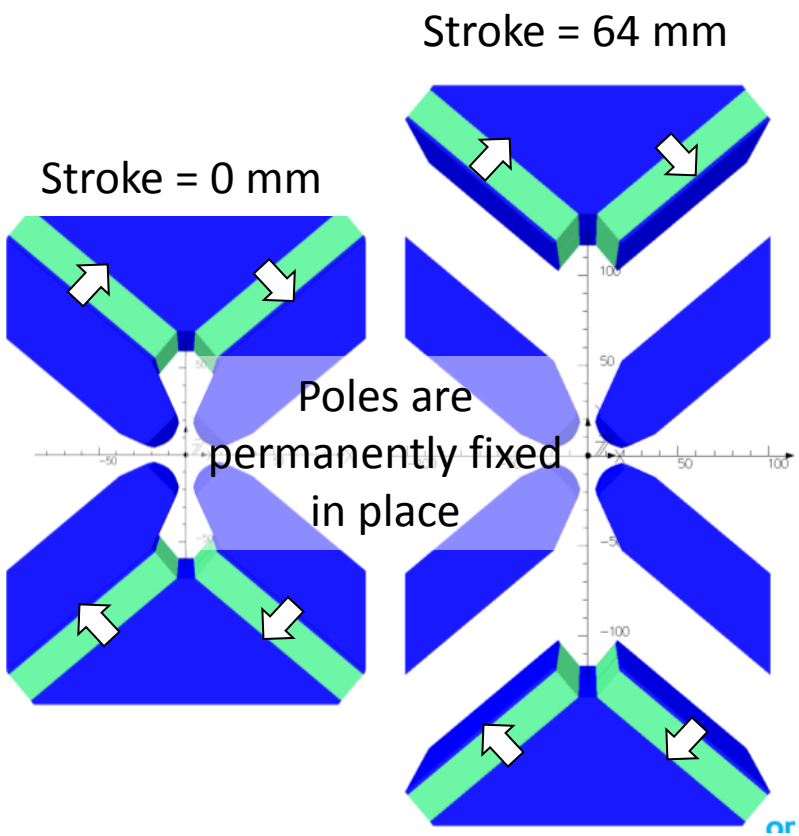

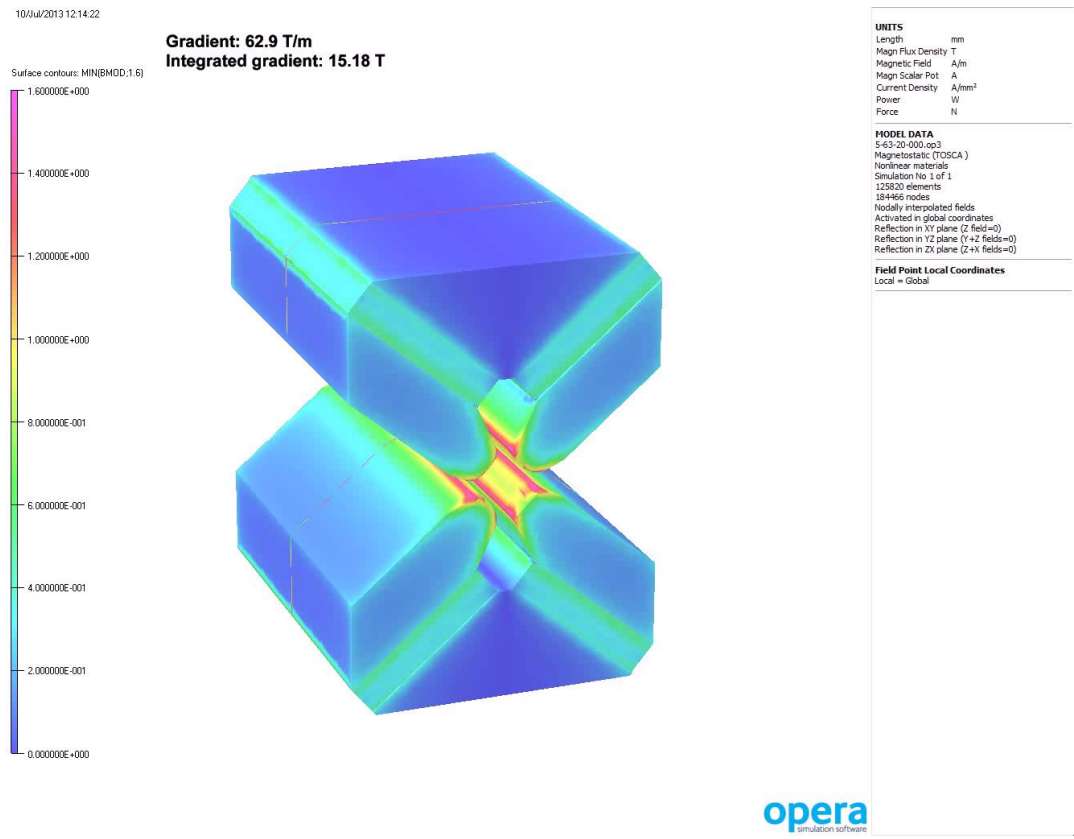

Engineering of High Energy Quad

- Single axis motion with one motor and two ballscrews
- Rotary encoder on motor (linear encoders used during setup to check repeatability)
- Maximum force is 16.4 kN per side, reduces by x10 when stroke = 64 mm
- PM blocks bonded to steel bridge piece and protective steel plate also bonded
- Steel straps added as extra security

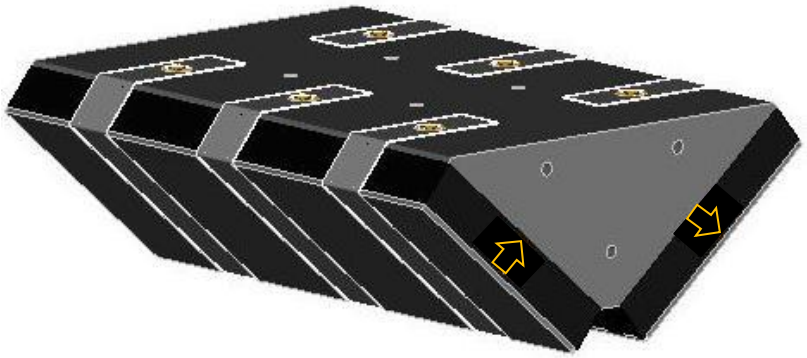

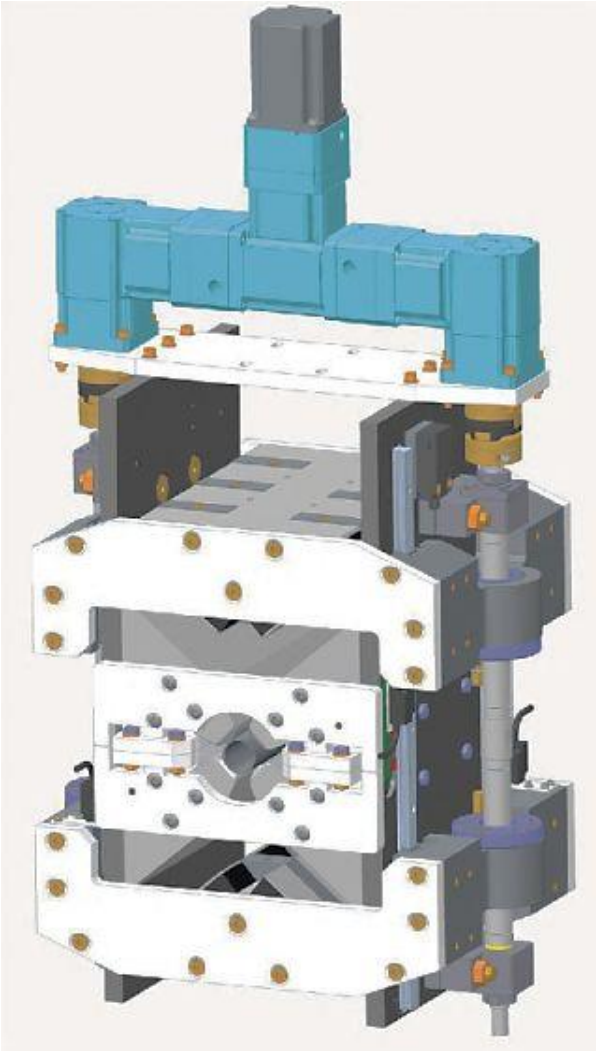

Assembled Prototype

Science & Technology
Facilities Council

Measured Integrated Gradient

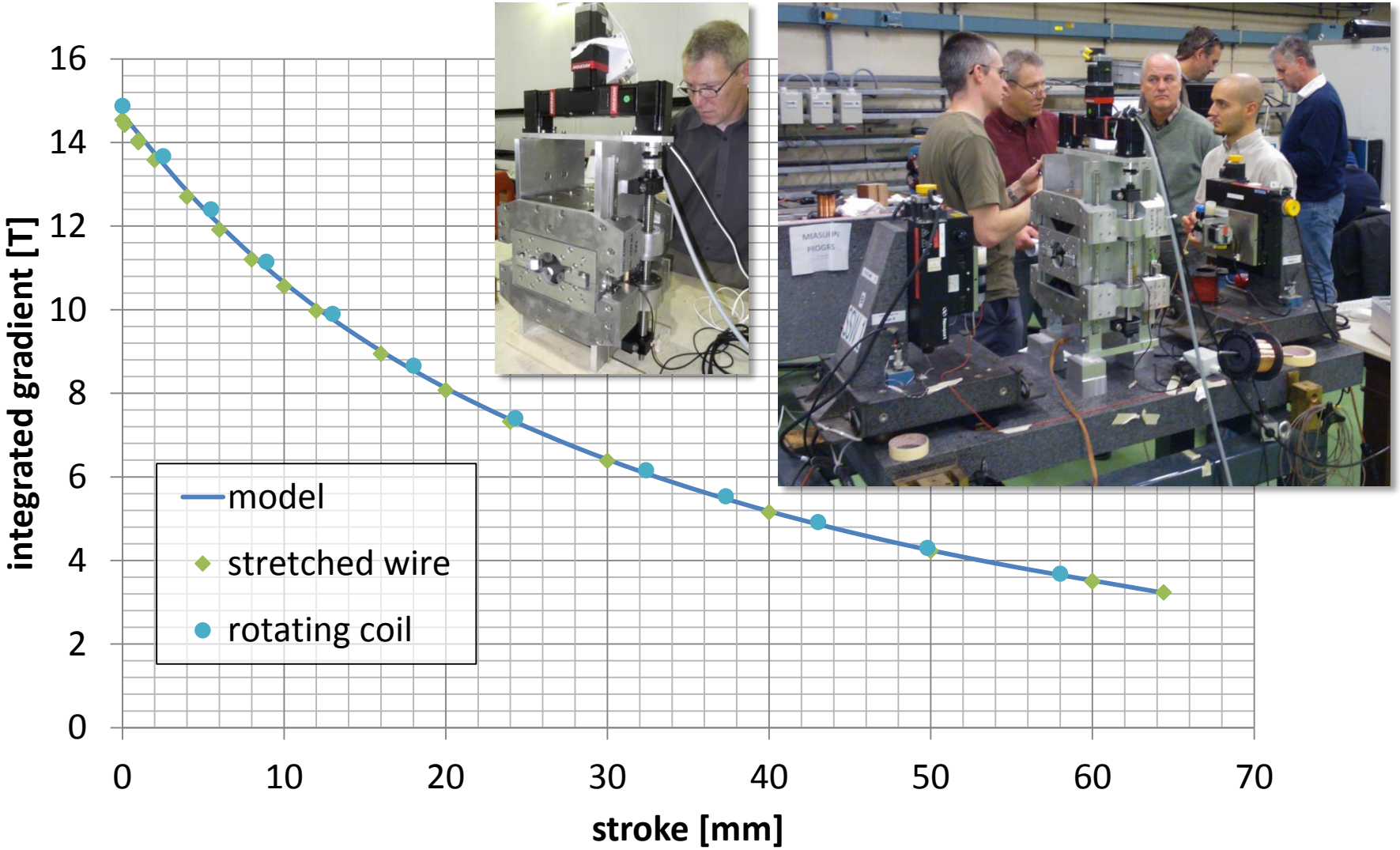

BJA Shepherd et al 2014 JINST 9 T11006

Magnet Centre Movement

- The magnet centre moves vertically upwards by **~100 µm** as the permanent magnets are moved away
- 3D modelling suggests this is due to the rails being **ferromagnetic** (**μ_r ~ 100**, measured) and **not mounted symmetrically** about the midplane – should be easy to fix
- Motor/gearbox assembly may also be a contributing factor

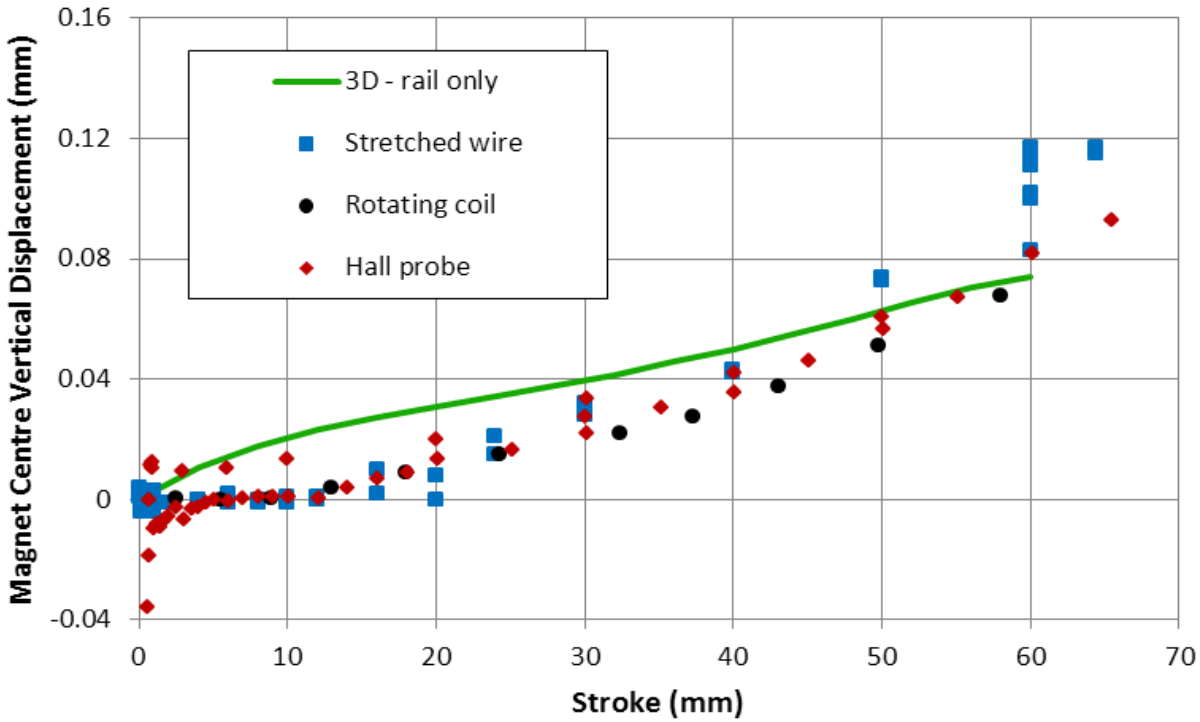

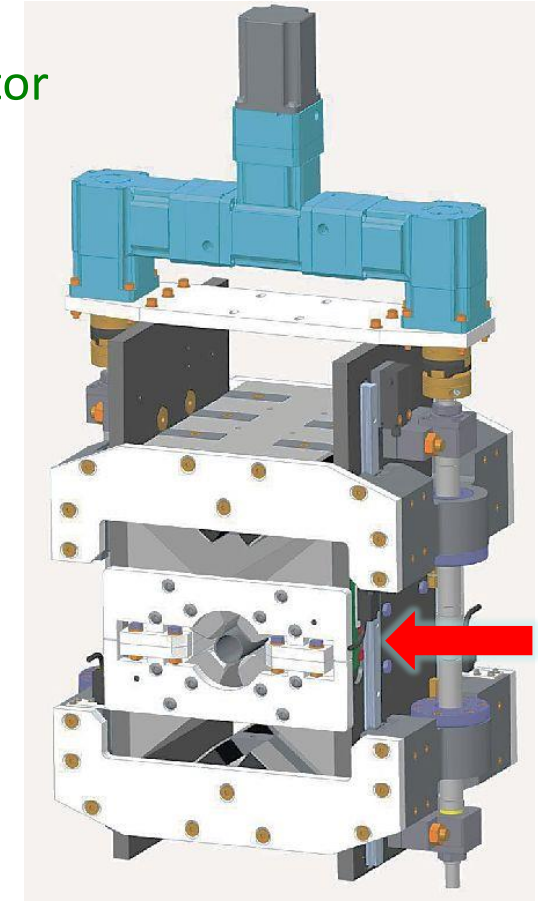

Measured Field Quality

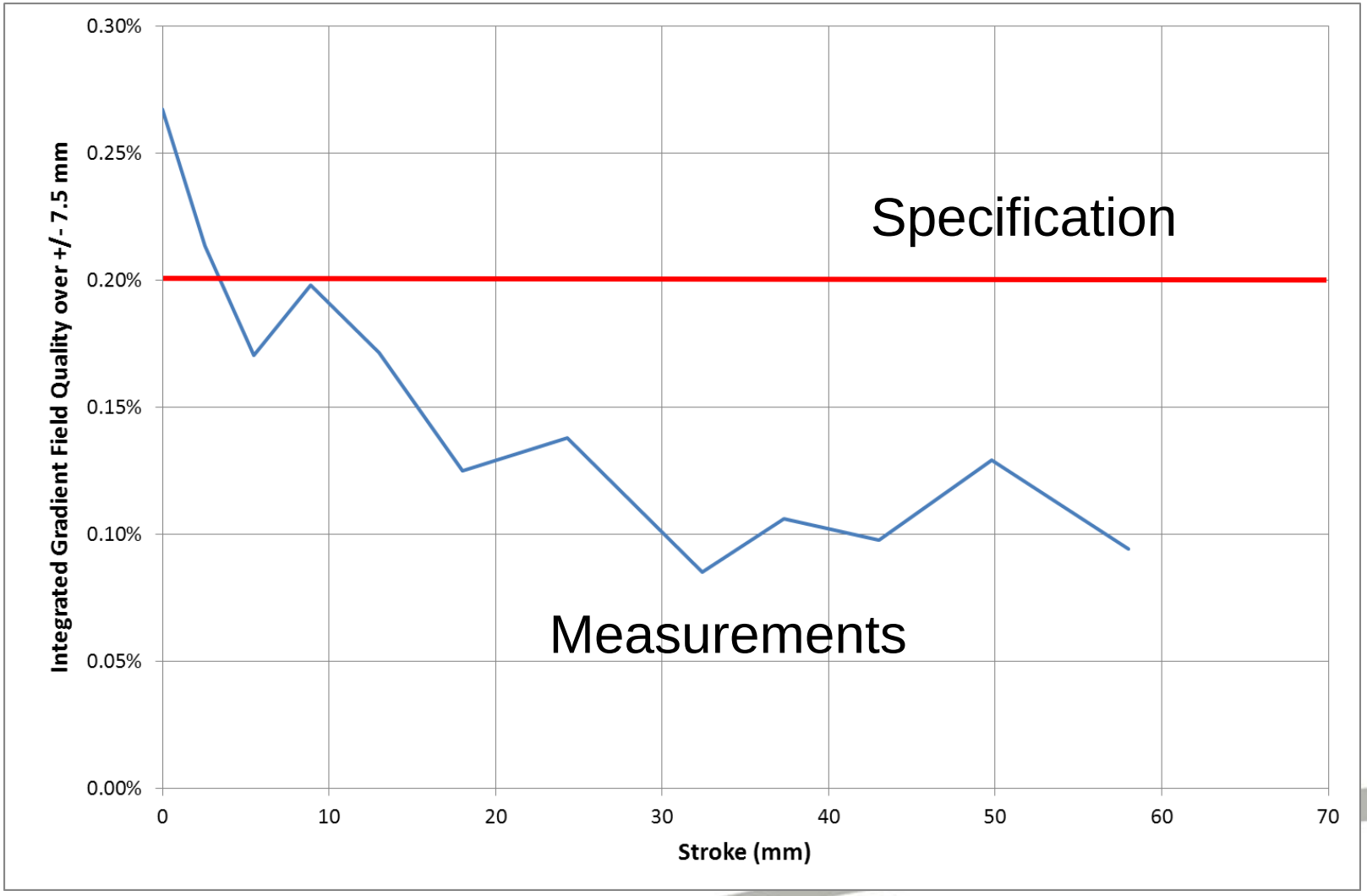

Science & Technology Facilities Council

Low Energy Quad Design

- Lower strength 'easier' but requires **much larger tuning range (factor 12)**
- Outer shell short-circuits magnetic flux **to reduce quad strength rapidly**
- **NdFeB** magnets with B_r **= 1.37 T** (VACODYM 764 TP)
- 2 PM blocks are 37.2 x 70 x 190 mm

- Max gradient = **43.4 T/m** (stroke = 0 mm)
- Min gradient = **3.5 T/m** (stroke = 75 mm)
- Pole gap = 27.6 mm
- Field quality = ±0.1% over 23 mm

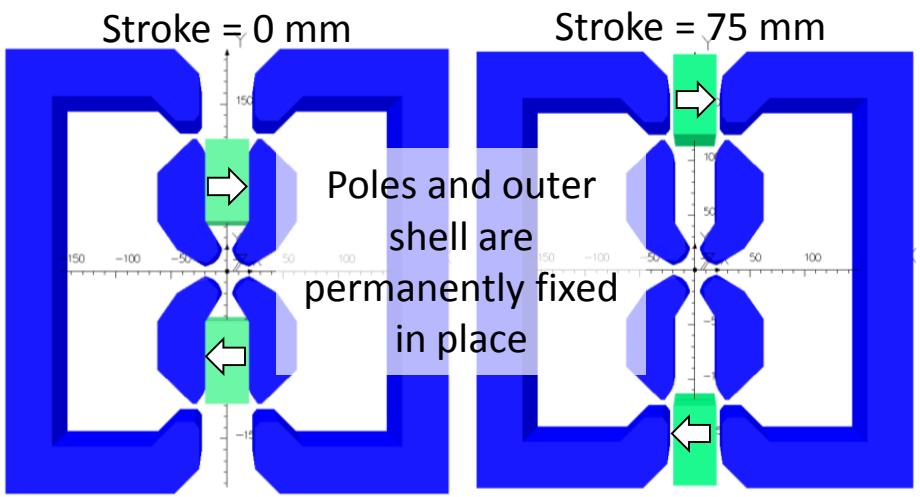

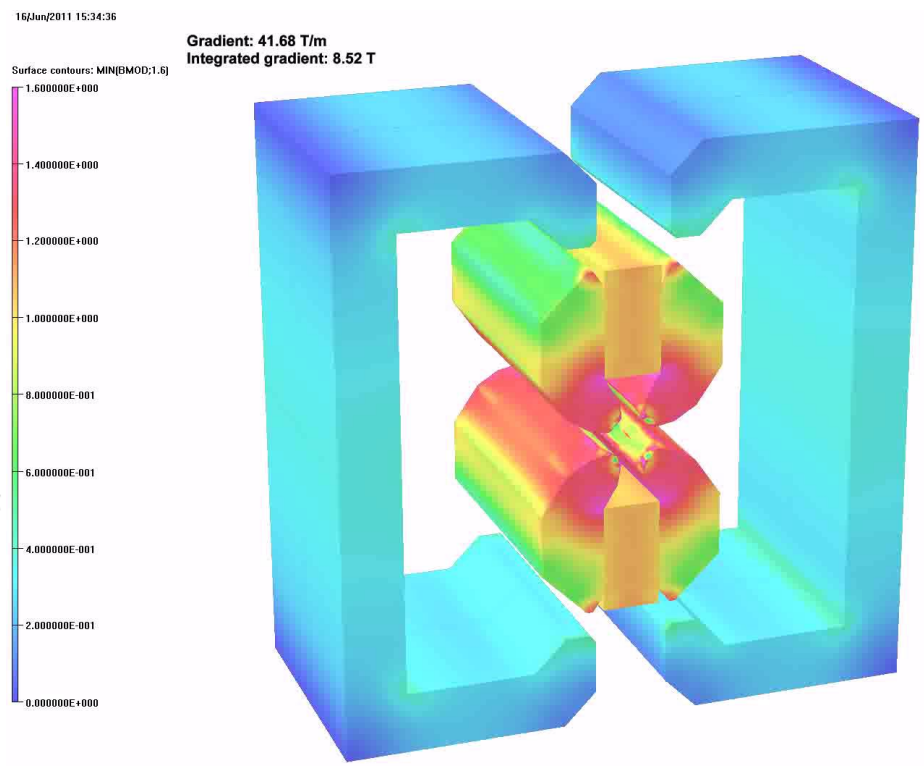

Engineering of Low Energy Quad

- Simplified single axis motion with one motor and one ballscrew
- Rotary encoder on motor – linear encoders used during setup to check repeatability
- Maximum force is only 0.7 kN per side
- PM blocks bonded within aluminium support frame, no straps

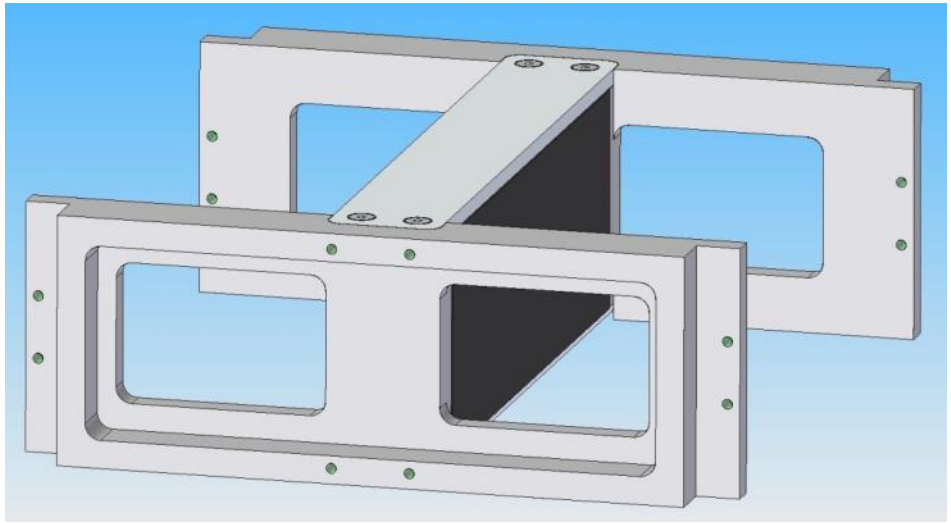

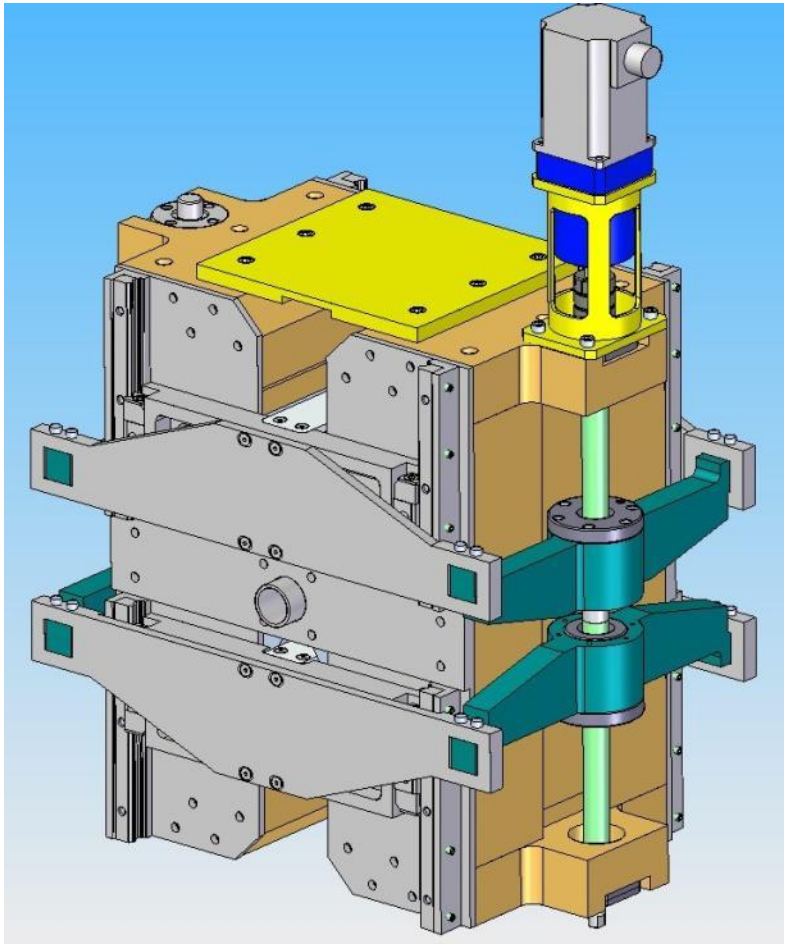

Measured Integrated Gradient

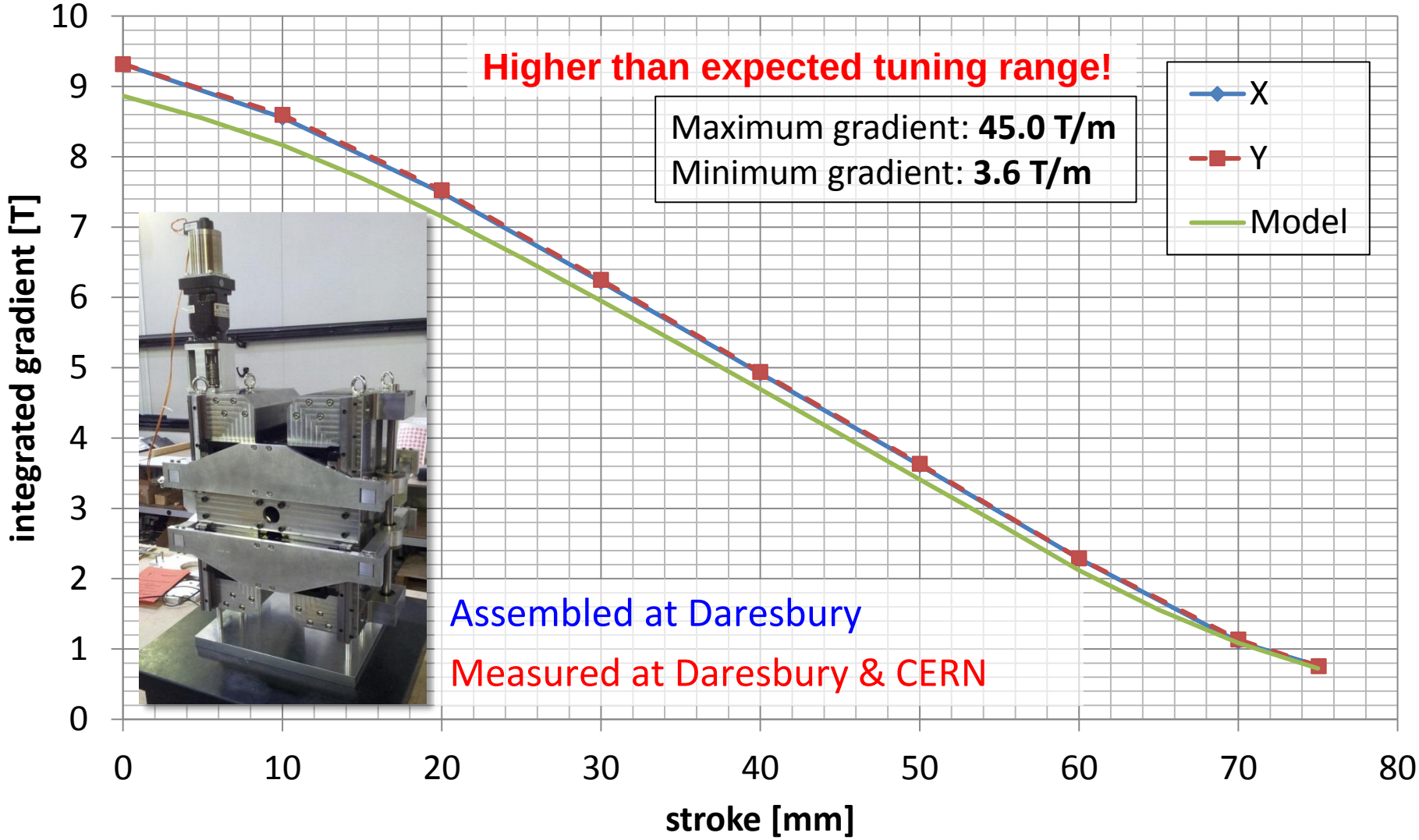

D. Caiazza et al, TE-MSC TN 2015-12

Measured Temperature Variation

Passive compensation could be included in the design if required

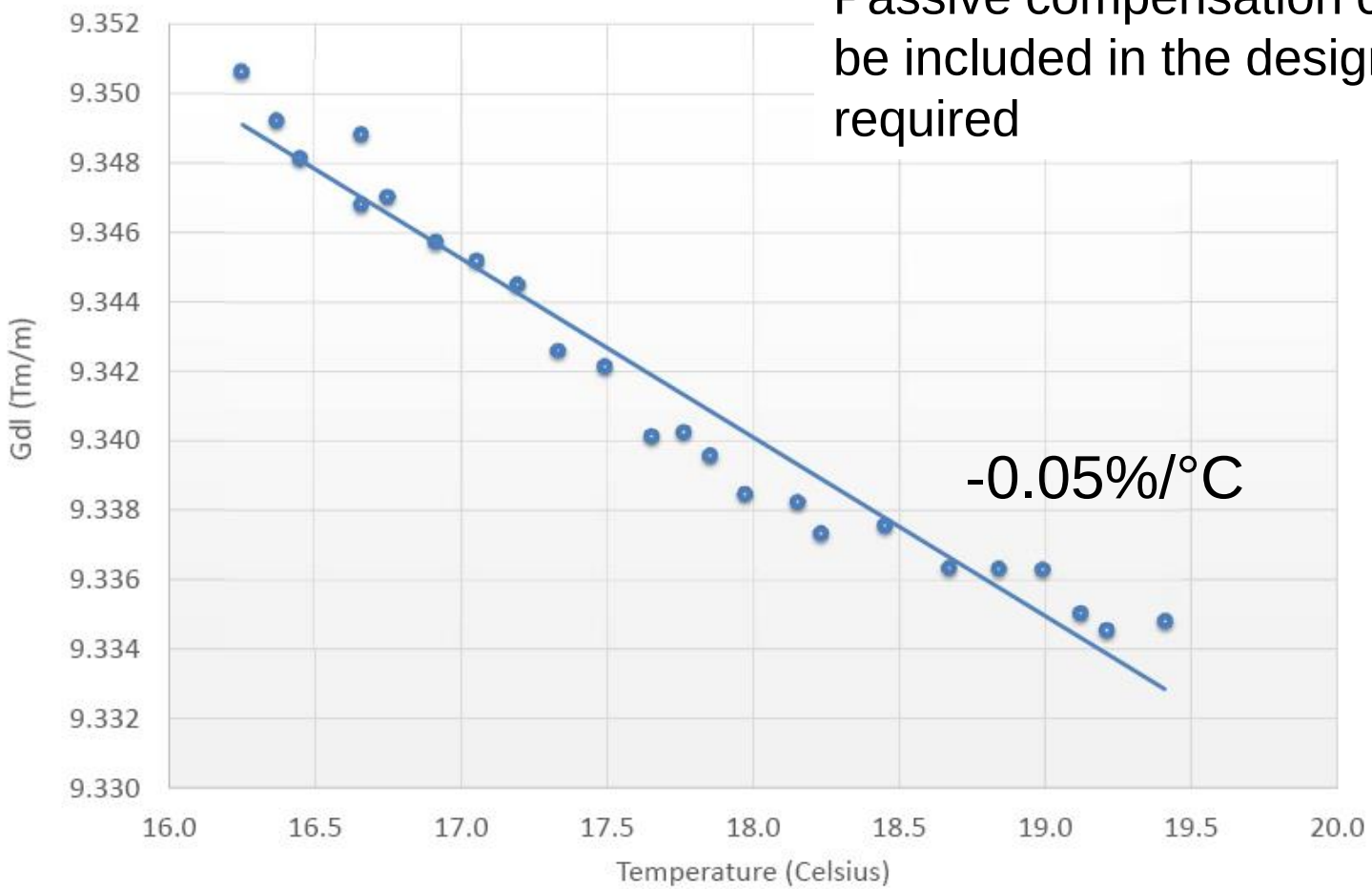

Measured Axis Movement

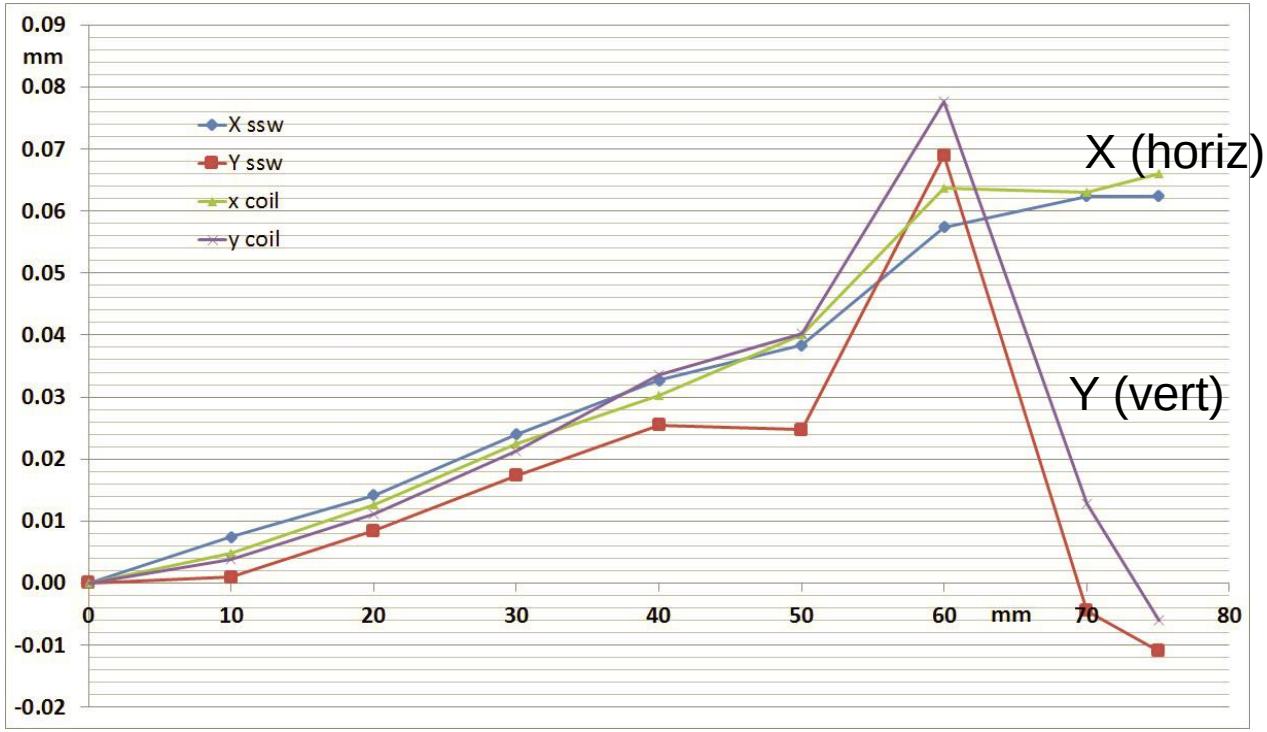

- Good agreement between measurement methods
  - stretched wire
  - rotating coil
- X axis moves in one direction
- Y axis moves up and then back down
- No convincing explanation yet but appears to be mechanical rather than magnetic effect – more tests required

PM Dipoles

- Drive Beam Turn Around Loop (DB TAL)
- Main Beam Ring to Main Linac (MB RTML)
- Total power consumed by both types: **15 MW**
- Several possible designs considered, x2 adjustability from 0.8T to 1.6T is greatest challenge

Type	Quantity	Length (m)	Strength (T)	Pole Gap (mm)	Good Field Region (mm)	Field Quality	Range (%)
MB RTML	666	2.0	0.5	30	20 x 20	1×10^{-4}	± 10
DB TAL	576	1.5	1.6	53	40 x 40	1×10^{-4}	50–100

Some of the Dipole Concepts Considered

Moving steel top plate

Huge vertical force

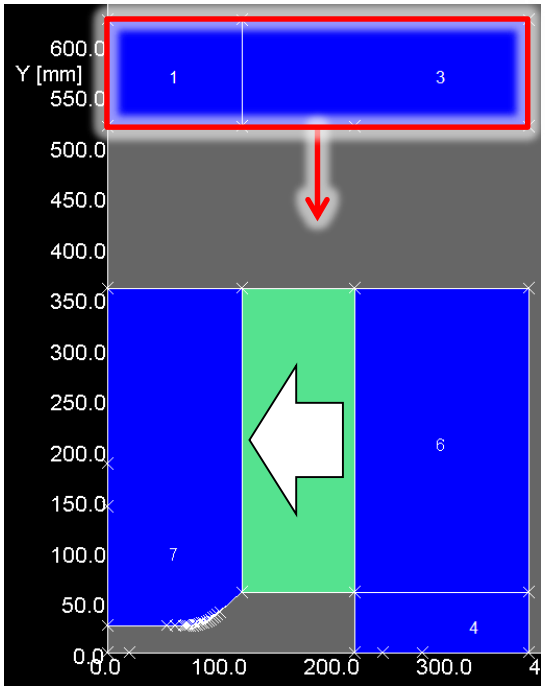

(Design from SPring-8 (Watanabe, IPAC'14))

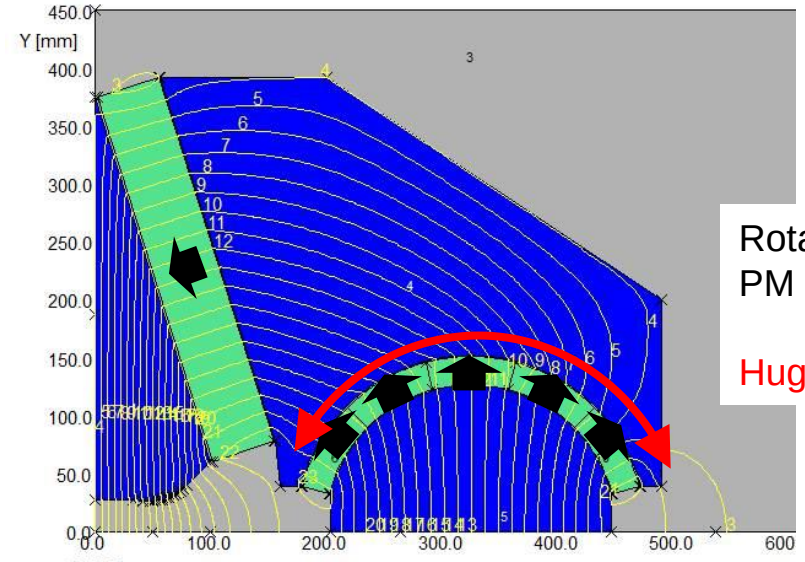

Rotating steel and PM assembly

Huge torque required

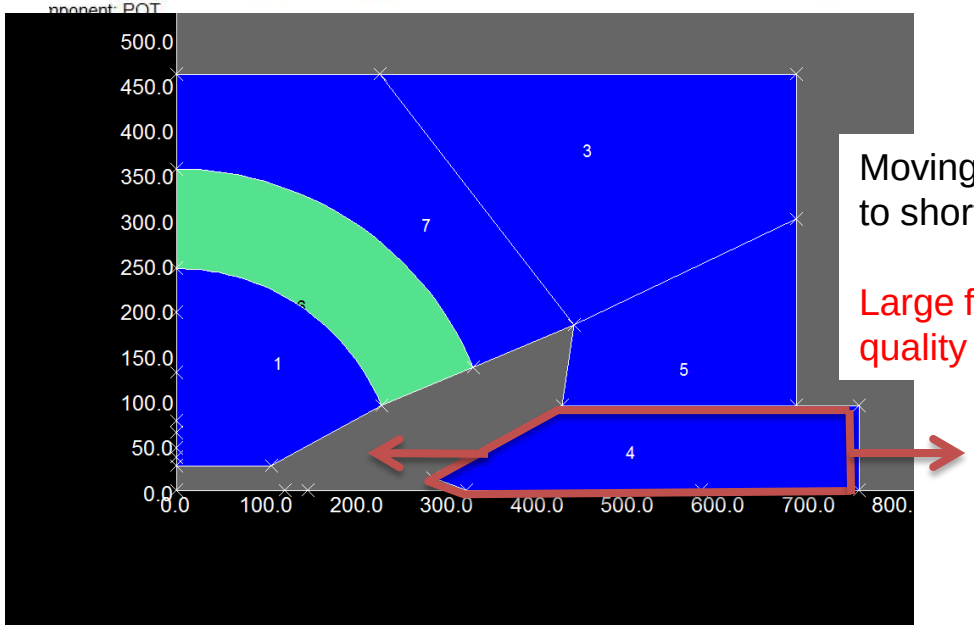

Moving steel plate to short circuit flux

Large forces, field quality concerns

Selected Dipole Concept

- Sliding PM in backleg
  - Similar to low strength quad
  - Rectangular PM
  - Forces manageable
  - C – shape possible
  - Curved poles (along beam arc) possible
  - Wide
  - Large stroke

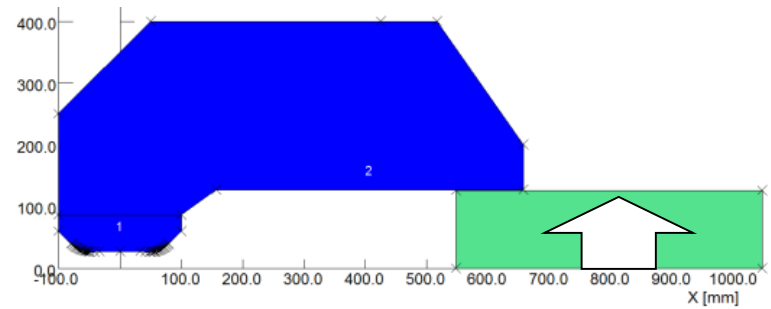

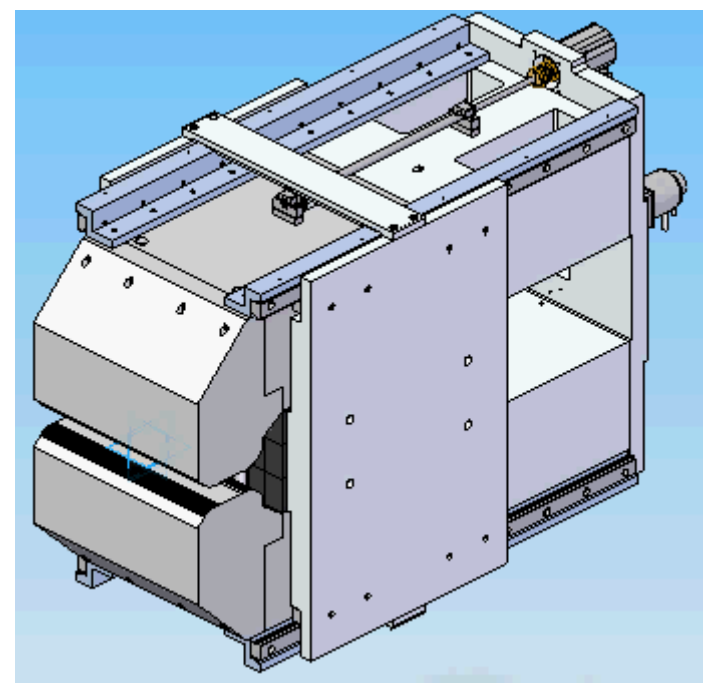

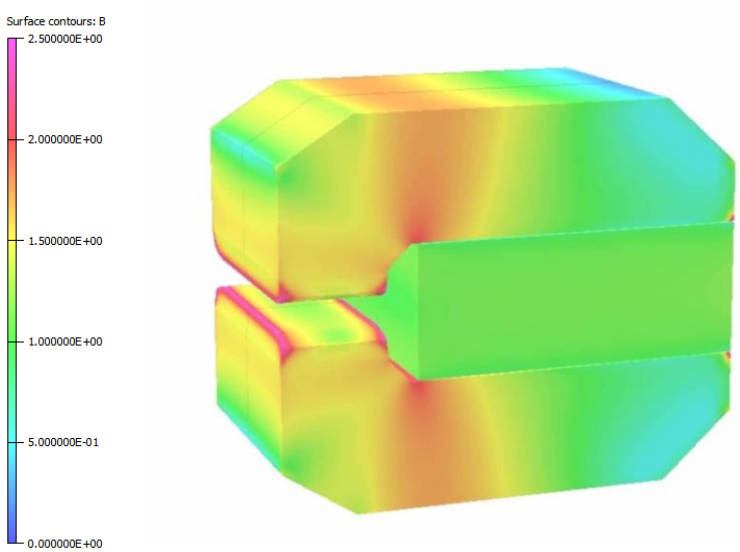

Dipoles – Next Steps

- Detailed engineering design of selected option
- Build and measure prototype for DB TAL dipole (50 to 100% tuning) in 2016
- Refine design, learn lessons
- Develop design concept for MB RTML dipole (+/- 10% tuning)

Summary

- PM driven magnets have **many advantages** in terms of **operating costs, infrastructure requirements,** and **power load** in the tunnel
- We have shown that **only two PMQ designs** are required to cover the entire range of gradients required for the CLIC Drive Beam
- Two prototypes have been **built** and **measured**, demonstrating the required gradient range
- Main issue with the prototypes is that the **magnetic centre** moves vertically as the gradient is adjusted
  - High energy quad magnetic effect – TBC
  - Low energy quad mechanical effect – TBC
- Several possible dipole concepts for the DB-TAL have been assessed
  - The selected design will be prototyped and tested to confirm performance during 2016