Investigation on discharge mechanism of a particle beam triggered gas switch

Tie Weihao
High Power Microwave laboratory, Xi'an Electronic Engineering Research Institute, Xi'an, 710100 China
twh.110.666@163.com

Wang Tonglei, Zhang Yuting, Guo Can, Zhang Qiaogen
School of Electrical Engineering, Xi'an Jiaotong University, Xi'an 710049 China
84470220@qq.com

***Abstract*—Gas switch plays a key role in the pulsed power system. In this paper, we observed the discharge process of a particle beam triggered gas switch at the lowest working coefficient. The temporal and spatial evolution of particle beam was captured in real time and the velocity curves of particle beam under different gas pressures were obtained. And the triggering mechanism of the gas switch was analyzed. The results showed that, the particle beam moved forward in a bullet mode, and the speed of which increased with the decrease of pressure and decreased with time growing. At the initial time, the speed of the particle beam could reach 3.68×10^{6}cm/s. The positive and negative streamers were occurred in the triggered gap and particle-beam gap respectively. At the lowest working coefficient 47.2%, the delay time of the two gaps was 34.2ns and 42.1ns, which were basically same as optical diagnostic results. The particle beam triggering was a non-penetrating induced discharge method, and the electric field of the head of discharge channel was enhanced through injecting electrons to the spark gap. The discharge process was accelerated from electron avalanche to streamer, and it was conducive to the rapid closure of the switch.**

Keywords—Gas switch; particle beam; spark discharge; delay time

I. INTRODUCTION (*HEADING 1*)

With the rapid development of high power microwave、X flash photography and Z-pinch driven inertial confinement fusion, pulsed power technology develops towards high power, fast rise time and high repetition frequency. So the topology of multiple modules integrating is widely used in pulsed power system, such as fast linear transformer driver (FLTD) [1-3]. This circuit topology needs lots of gas switches, and in order to obtain a shape and high amplitude pulse on the load, a fast discharge, low jitter and low prefire gas switch is required [4].

A common method to reduce prefire probably is to increase working coefficient. However, it leads to the dramatic increase of the switch jitter [5-7]. Some study showed that, gas switches could not be triggered well at the working coefficient lower than 50% [8]. And the discharge characteristics of the gas switch depended more on the discharge performance of the overvoltage gap when the working coefficient was lower than 70%. In this case, it is difficult to improve the discharge characteristics of the switch even if increase the trigger voltage[9]. The previous investigations showed that a gas switch triggered by particle beam could operate with a low jitter at a low working coefficient [10]. In order to master the particle beam triggering technology and optimize the structure design of the switch, we need to study the discharge processes of the particle beam triggered gas switch.

In this paper, a transient optical diagnostic platform was established for studying the particle beam triggered gas switch. The temporal and spatial evolution of particle beam was observed, and the discharge processes of the particle beam triggered gas switch were analyzed. Finally, we promote the trigger mechanism of the particle beam triggering.

II. EXPERIMENTAL SETUP AND METHOD

Fig 1 shows the schematic of the experimental setup employed for testing the discharge characteristics of the particle beam triggered gas switch. The structure of the switch was similar to that of a typical three-electrode electric filed distortion gas switch. The feature of the structure was that a micro-incentive chamber was embedded in the trigger electrode, and the spark gap was divided into two parts, each 8mm in length. Two 40-nF pulse capacitors (C_1 and C_2) were charged to $\pm$25kV. They were connected to the positive and negative high-voltage electrodes. The load (R_L) was a 3Ω KCL water-solution resistor. In order to establish the electric field as high as possible and increase the coupling energy, the needle electrode in the chamber was grounded by a 1.2μH inductor (L_g). A trigger pulse with the amplitude of +40kV and the rise time of 25ns was imposed on the trigger electrode by a 1μH isolation inductor (L_i). The working coefficient of the switch was changed by adjusting the gas pressure. The trigger voltage was measured by using a voltage divider P6016A. Pearson 5046 and 110A+ Coils were used to monitor the load current and needle current, respectively. The temporal and spatial evolution of particle beam and discharge process of the gas switch was recorded by nanosecond framing camera with an exposure time 3ns.

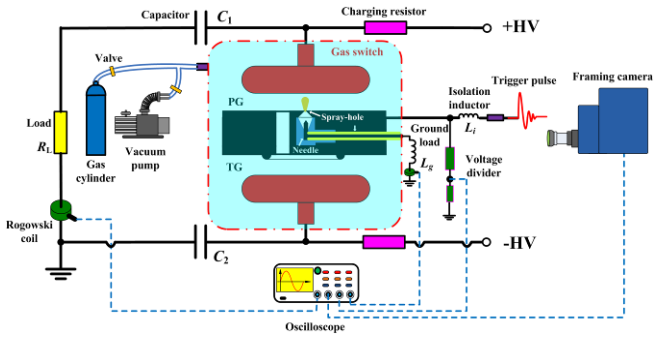

Fig. 1 Schematic of the experimental setup

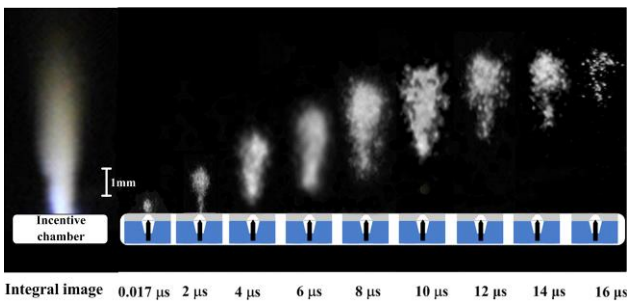

Fig. 2 Spatial-temporal evolution of the particle beam

As a trigger pulse arrives at the trigger electrode, the electric field of two spark gaps of the switch will be distorted under the joint action of the charging voltage and trigger voltage. We define triggered gap(TG for short) as the gap that breaks down first triggered by trigger pulse, and Particle-beam gap(PG for short) as the gap that breaks down second triggered by particle beam.

III. Results and Discussion

Fig.2 shows the spatial-temporal distribution and the evolution of particle beam at the pressure of 0.1MPa. The particle beam moves forward in a bullet mode, the pattern of which is similar to that of the electron avalanche, and the diameter of the head is obviously larger than that of root. It can also be seen that the particle beam has emerged from the chamber after 17ns when the trigger pulse arrives, and the height is about 0.5mm at this moment. At 12μs or 14μs, the particle beam has developed to steady state, the height of which is about 5.2mm, and the whole process lasts about 16μs.

Fig 4 shows the velocity of the particle beam at different gas pressures and moments. The propulsion velocity of particle beam decreases with time. Under the gas pressure of 0.1MPa the velocity of particle beam is 3.68×10^6cm/s at 17ns. And at 2μs, the propulsion velocity of particle beam slows down about two order of magnitude, which is 6.5×10^4cm/s, as shown in Fig.4(a). The reason is that, the electric field outside the chamber decays rapidly with the increase of the axial distance, and both the migration velocity of electron and ion decrease. Furthermore, it is obvious that, the velocity of the particle beam decreases with the increase of gas pressure. With the gas pressure increasing to 0.2MPa and 0.32MPa respectively, the

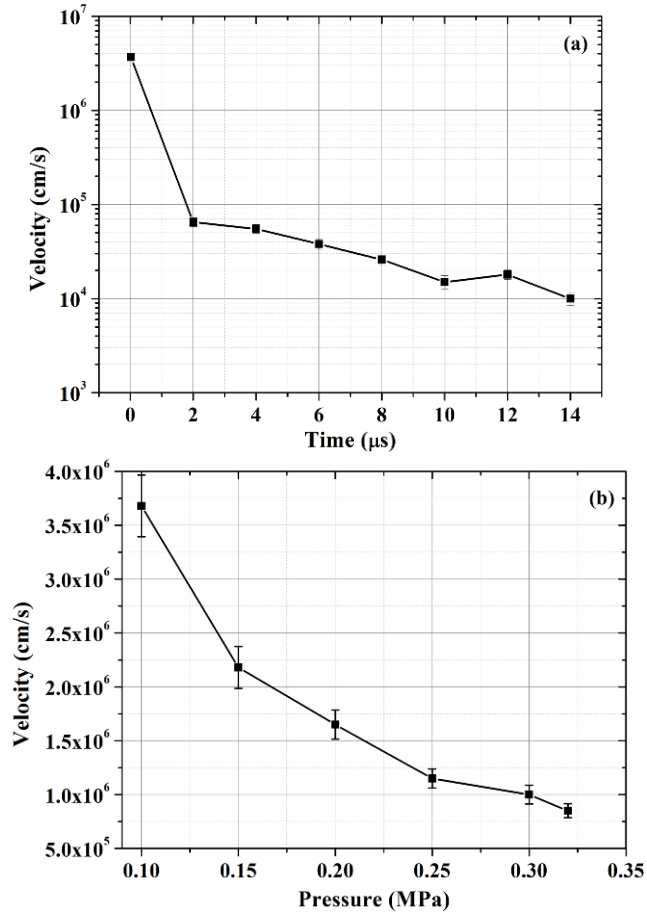

Fig. 3 Velocity of the particle beam under the different conditions (a) Velocity with the different time (b) Velocity under the different pressures

velocity reduces to 1.65×10^6 cm/s and 0.85×10^6cm/s at the initial time. This behavior may have occurred because excessive high pressure shortens the electron mean free path, and increases the probability of collisions between charged particles and gas molecules, which results in more energy loss of the charged particles. Therefore, under a higher gas pressure, the velocity of particle beam is slower.

In the further experiment, the particle beam has been used as the triggering method of a three-electrode gas switch, and the discharge characteristics of the gas switch also have been investigated. In order to analyze the discharge process of the gas switch in detail, the delay time of the whole gap(Δt), TG(Δt_1) and PG(Δt_2) are measured respectively. The jitter is defined as the standard deviation of the delay time.

Fig.5 shows the discharge characteristics of the gas switch at different working coefficients. It can be noted that, the total delay time(Δt) increased exponentially as the working coefficient decreased. When the working coefficient is between 50.2% and 87.1%, the jitter ranges from 3.0ns to 0.85ns. The lowest working coefficient of the switch can reach 47.2%, in this case, the delay time and jitter are 76.1ns and 4.1ns respectively. However, if the needle electrode inside the chamber is removed, and a trigger pulse is applied to the trigger electrode directly, it is equivalent to the gas switch

triggered by the electric field distortion, the lowest working

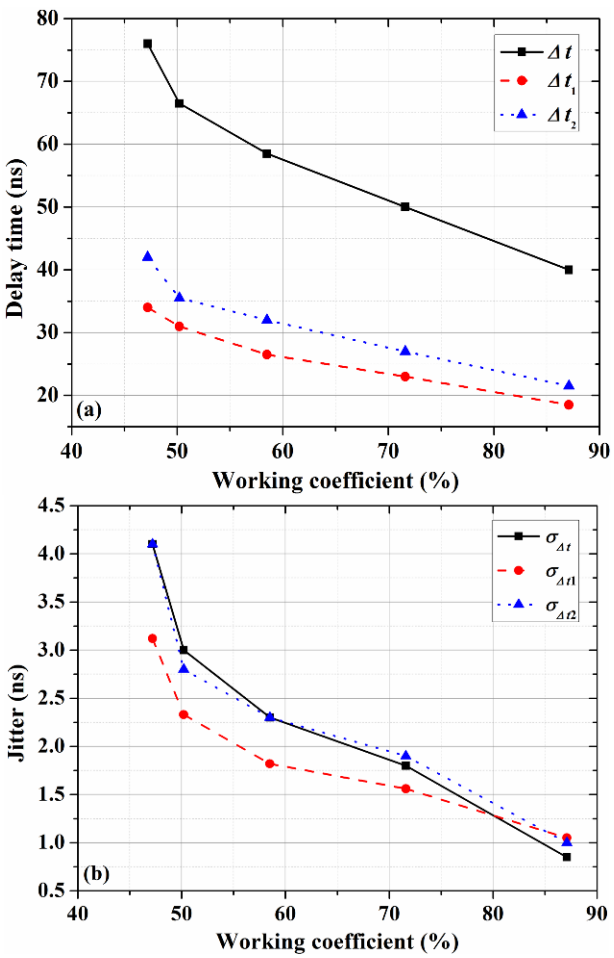

Fig.4 Triggered delay times and jitters of particle beam Triggered Gas Switch

coefficient is only 55.3%, namely, the gas pressure is 0.28MPa. This shows that the particle beam produced in the chamber can promote the development of triggered discharge. In order to explore the particle beam triggering mechanism, the discharge processes of the particle beam triggered gas switch at the lowest working coefficient were photoelectric diagnosed.

In this paper, we can clearly distinguish the sequence of discharge in the incentive chamber, TG and PG by measuring the waveforms of trigger voltage(U_{tr}), needle electrode current(I_n) and load current(I). Fig.6 shows the trigger discharge waveform of the particle beam triggered gas switch at the working coefficient of 47.2%. As shown in Fig.6, the discharge processes of the particle beam triggered gas switch can be divided into three stages.

The 1st stage: at 0ns, the trigger pulse($+U_{tr}$) arrives the gas switch, and the amplitude of the trigger voltage increases continually. At about 10ns, the discharge occurs in the incentive chamber firstly, and then the current flows through the needle electrode, which suggests the particle beam begins to generate gradually. After that, the voltage of trigger electrode rises continually because of the isolation of grounding load. At 35ns, the electric field of the TG increases to the critical breakdown strength so that the TG begins to

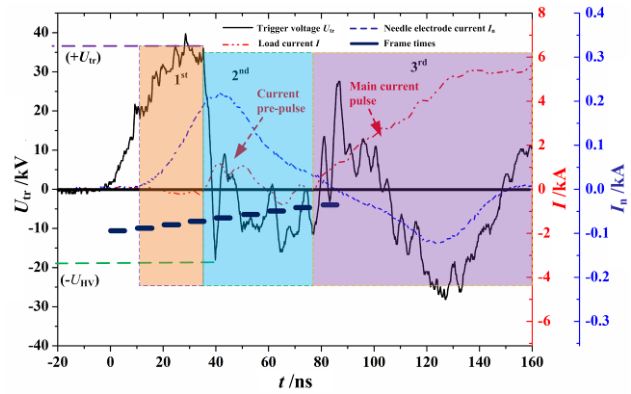

Fig. 5 Voltage and current waveforms in the triggered discharge process at working coefficient of 47.2%

discharge.

The 2nd Stage: after the TG breaks down, the potential of trigger electrode drops towards the potential of negative high-voltage electrode rapidly. At about 36ns, a pre-pulse current is observed on the load, which suggests the TG has already broken down. During this stage, the particle beam develops forward in the PG continuously.

The 3rd Stage: with the development of the particle beam, the electric field of the PG is enhanced continuously. When the request of the streamer discharge is satisfied, the discharge changes into self-maintaining discharge. About 73.8ns, a main current pulse appears in the circuit. Up to this point, the gas switch has broken down.

The action time and the mode of particle beam cannot be obtained accurately only by measuring the waveforms of voltage and current. To solve the above question, we adopt nanosecond framing camera to record the whole discharge processes of particle beam triggered gas switch synchronously under the same experimental condition.

When the positive trigger pulse reaches the trigger electrode, the trigger electrode serves as the positive electrode relative to the negative high voltage electrode. As shown in Fig.7, the discharge channel has formed at the annular convex in the TG at 10ns because of the strongest electric field. At 20ns, the length of discharge channel is about 2.6mm while at 30ns, the length of discharge channel increases to 5.2mm. It should be noted that, the weak and spherical particle beam has been observed at the spray-hole in the PG. The height of the particle beam is about 0.2mm and velocity is about 0.8×10^6cm/s, which is similar to the velocity of the particle beam at the same pressure. At 40ns, the discharge channel has already run through the whole TG. The velocity of discharge channel maintains above 10^7cm/s during the whole triggered discharge, which is similar to the velocity of positive streamer [11]. So we assume that a positive streamer discharge occurred in the TG.

The potential of trigger electrode drops to that of negative high voltage electrode after TG broken down. The discharge channel continues to develop from trigger electrode to the

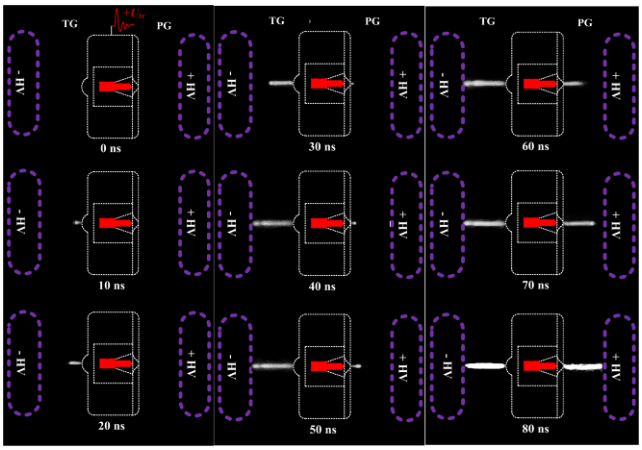

Fig. 6 Framing pictures in the triggered discharge of the particle beam triggered gas switch

opposite positive high voltage electrode in the PG. At 40ns, the length of discharge channel is 0.6mm, and the velocity is 4 $\times 10^6$cm/s, which is obviously lower than the velocity of the streamer, but close to the velocity of the electron avalanche. Therefore, it can be inferred that the discharge moves forward in the form of electron avalanche. At 50ns, the velocity of discharge channel increases to 10^7cm/s. During 60-70ns, the velocity of discharge channel obviously increases to (1.6-3.1) $\times 10^7$cm/s, which is faster than that of 30-50ns obviously. It indicates that the discharge has already changed from electron avalanche to streamer discharge, and a negative streamer occurred in the PG [12]. The PG breaks down at 73.8ns, at the moment the velocity of discharge channel can reach 5×10^7cm/s. At 80ns, the energy stored in the capacitors was released through the discharge channel, which increased the ionization of the discharge channel so that the optical emission increased obviously. In addition, the delay times of the two gaps measured by optical diagnosis agree with those measured by electric method, which proves the rationality of the above analysis.

It can also be seen that the delay time of the PG is about 40ns. During this time, the particle beam cannot run through the whole PG. In view of this, we present that the particle beam trigger mechanism is a non-penetrating inducing discharge. The triggered discharge processes of the gas switch are that, the particle beam is injected into the gap firstly, which not only provides initial electrons for discharge, but also enhances the electric field of the rest gap. Then, the discharge moves forward in the form of electron avalanche. The number of electrons increases continually through the collisions with the background gas molecules, which increases the electric field strength of the head of discharge channel and induces a fast breakdown.

IV. Conclusion

In this paper, we have observed the temporal and spatial evolution of particle beam in real time, and discussed the triggered discharge processes of a particle beam triggered gas switch. The velocity of particle beam reduces with the time, and increases with the decrease of gas pressure. The particle beam move at a maximum speed of 3.68×10^6cm/s. The switch is still triggered with the jitter of 4.2ns at the lowest working coefficient of 47.2%. Further study shows that the particle beam trigger mechanism is a non-penetrating inducing discharge. On one hand, it provides initial electrons to the spark gap for discharge; on the other hand, the space electric field distribution is deformed. The discharge is accelerated the change from electron avalanche to streamer. Therefore, both delay time and jitter are relatively low even at lower working coefficient. This work offers theoretical basis for optimizing triggering parameter.

References

[1] W A Stygas, M E Cuneo, R A Vesey etc. “Theoretical Z-pinch scaling relations for thermonuclear-fusion experiments,” *Phys. Rev. E.* 2005, 72(2): 1-21..

[2] [2] J R Woodworth, W E Fowler, B S Stolzfus etc. “Experiments on the UM A-MA linear transformer driver facility”, *Phys. Rev. ST Accel. Beams.* 2011, 14(4): 040401.

[3] [3] J R Woodworth, J A Alexander, F R Gruner etc. “Low-inductance gas switches for linear transformer drivers”, *Phys. Rev. ST Accel. Beams.* 2009.12(6): 060401.

[4] [4] Leckbee J L, Maenchen J E, Johnson D L etc “Design, simulation, and fault analysis of a 6.5MV LTD for flash X-ray radiography”, *IEEE Trans. Plasma Sci*, 2006, 34(5): 1888-1899.

[5] [5] Wei Hao, Sun Fengju, Jiang Xiaofeng etc. “Breakdown characteristics of gas spark switch for fast linear transformer driver under DC and pulse combined voltage”, *High Power Laser Part. Beams*, 2014, 26(4): 045013.

[6] [6] Chen Y, Mankowski J, Dickens J etc. “Low-jitter triggered spark gap with high-pressure gas mixture”, *IEEE Trans. Plasma Sci*, 2006, 36(5): 2546-2553.

[7] [7] Li Xiaoang, Liu Xuandong, Gou Xuanqi etc. Degradation of performance due to electrode erosion in field distortion gas switch in long-term repetitive operation[J]. *IEEE Trans. Plasma Sci*, 2014, 42(10) :95-103.

[8] [8] J R Woodworth, J A Alexander, F R Gruner, etc, “New low inductance gas switches for linear transformer drivers[J],” *Phys. Rev. ST Accel. Beams*, 2010, 13(8): 080401.

[9] [9] Liu Peng, Wei Hao, Sun Fengju, etc. “Low inductance field distortion gas spark switches for Fast Linear Transformer Driver”, *High Voltage Eng.* 2011, 37(10): 2554-2560.

[10] [10] Tie Weihao, Liu Shanhong, Liu Xuandong etc. “A novel low-jitter plasma-jet triggered gas switch operated at a low working coefficient”, *Rev. Sci. Instrum*.2014, 85(2): 023504.

[11] [11] Yang Jinji. *Gas discharge*[M], Beijing: China Science Press, 1983.

[12] [12] Xu Xueji, Zhu Dingchang. *Gas discharge physics*[M], Shanghai: Fudan University Press.