# IBA accelerators for proton and ion beam therapy

19 January 2016 - Birmingham

Jarno Van de Walle

Accelerator physicist

Jarno.vandewalle@iba-group.com

# IBA accelerators : overview


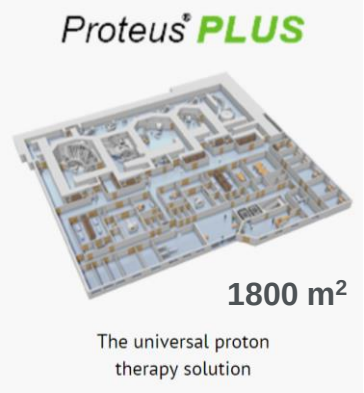



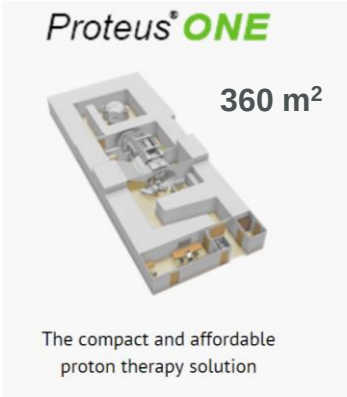


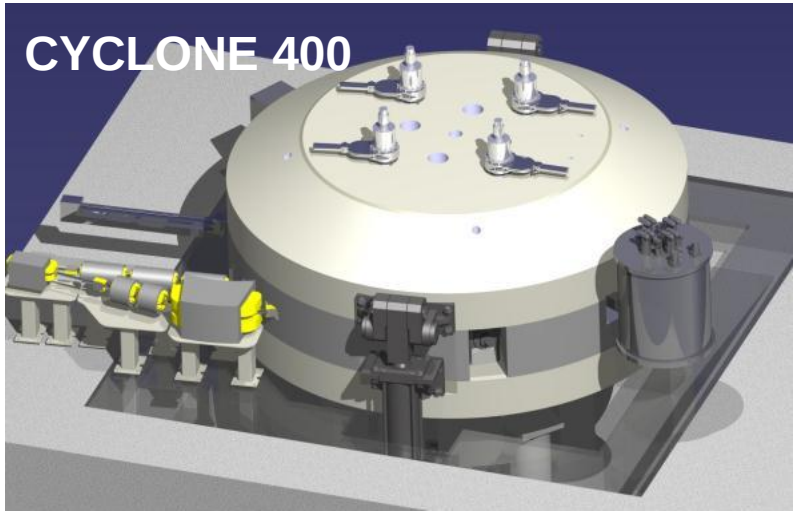

# IBA accelerators : timeline

- <1998 : synchrotrons for proton and carbon therapy

- 1998 : isochronous cyclotron Cyclone230 – 1st hospital based cyclotron for proton therapy (MGH, Boston)
  - Operational simplicity
  - Lower size and cost
  - Beam modulation at kHz frequencies
- Industrialisation of the Cyclone230
  - Spare parts management & standardisation
  - Product life cycle management
  - Trained operators & « flying » field engineers
  - …

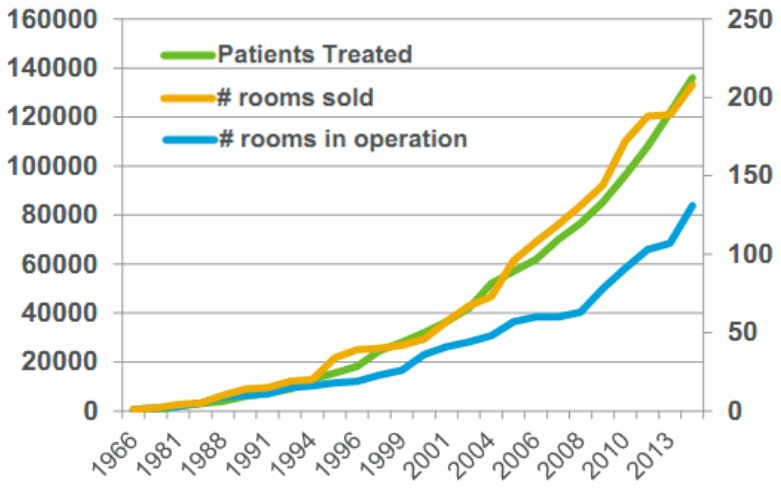


Figure: Y. Jongen, 21/9/2015

# IBA accelerators : timeline

- <1998 : synchrotrons for proton and carbon therapy

- 1998 : isochronous cyclotron Cyclone230 – 1st hospital based cyclotron for proton therapy (MGH, Boston)
  - Operational simplicity
  - Lower size and cost
  - Beam modulation at kHz frequencies
- Industrialisation of the Cyclone230

- 2016 : superconducting synchro-cyclotron $B\rho$ (230 MeV p+) = 2.33 T.m
  - smaller size and cost (80% footprint reduction from ProteusPLUS to ProteusONE)
  - Industrialisation of S2C2 (ongoing)

- Future : superconducting isochronous Cyclone400

# IBA accelerators : some parameters

| | C230 | | S2C2 | | C400 | |
|---|---|---|---|---|---|---|
| Type | Isochronous cyclotron | | Synchro-cyclotron | | Isochronous cyclotron | |
| Energy | 230 MeV $H^+$ | | 230 MeV $H^+$ | | $^{12}C^{6+}$ / $^{4}He^{2+}$ : 400 MeV/u<br>$H_2^+$ : 265 MeV/u | |
| Extraction | Electrostatic deflector (80%) | | Regenerative (50%) | | $^{12}C^{6+}$ / $^{4}He^{2+}$ : Electrostatic deflector (70%)<br>$H_2^+$ : stripping (100%) | |
| Dimensions | Height | 2.1 m | Height | 1.56 m | Height | 3.4 m |
| | Diameter | 4.34 m | Diameter | 2.5 m | Diameter | 6.6 m |
| | Weigth | 220 ton | Weigth | 50 ton | Weigth | 700 t |
| Beam structure | Continuous<br>max. 1 μA | | Pulsed<br>max. 130 pC/pulse | | Continuous | |
| Peak Field | 2.9 T | | 5.7 T | | 4.5 T | |
| Coil | Resistive | | Superconducting (≈50 A/mm$^2$) | | Superconducting (≈28 A/mm$^2$) | |
| source | Internal PIG | | Internal PIG | | External ECR | |
| Dee voltage | 55-150 kV | | 10 kV | | 80-170 kV | |
| Power | 300 kW | | 60 kW | | | |

# The S2C2 and ProteusONE

- Design started in 2009
- Clinical commissioning in 2016 (CAL, Nice, France)
- Energy selection system inside the gantry

Proteus ONE

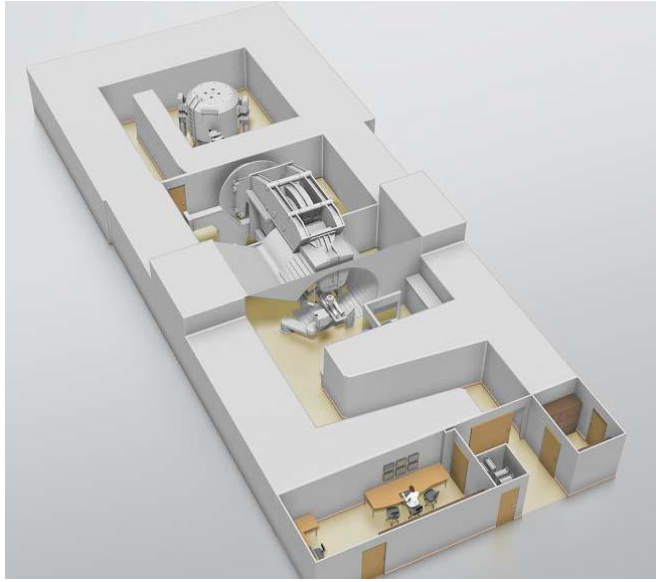

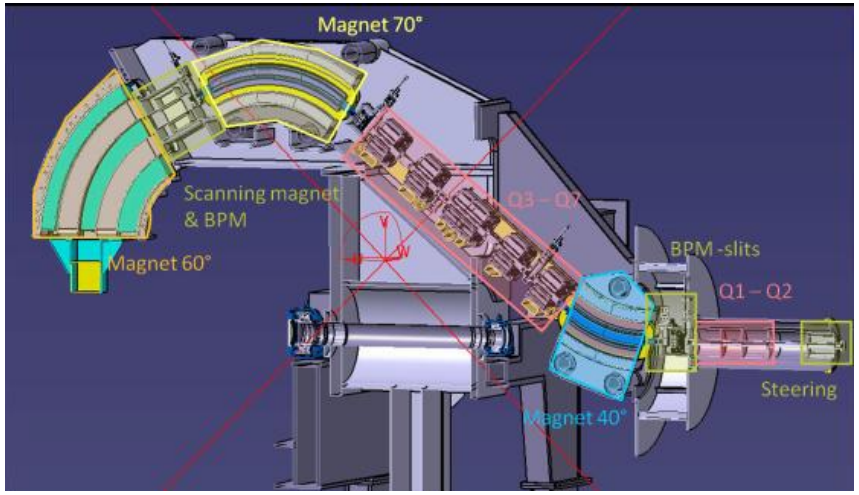


# The S2C2 and ProteusONE

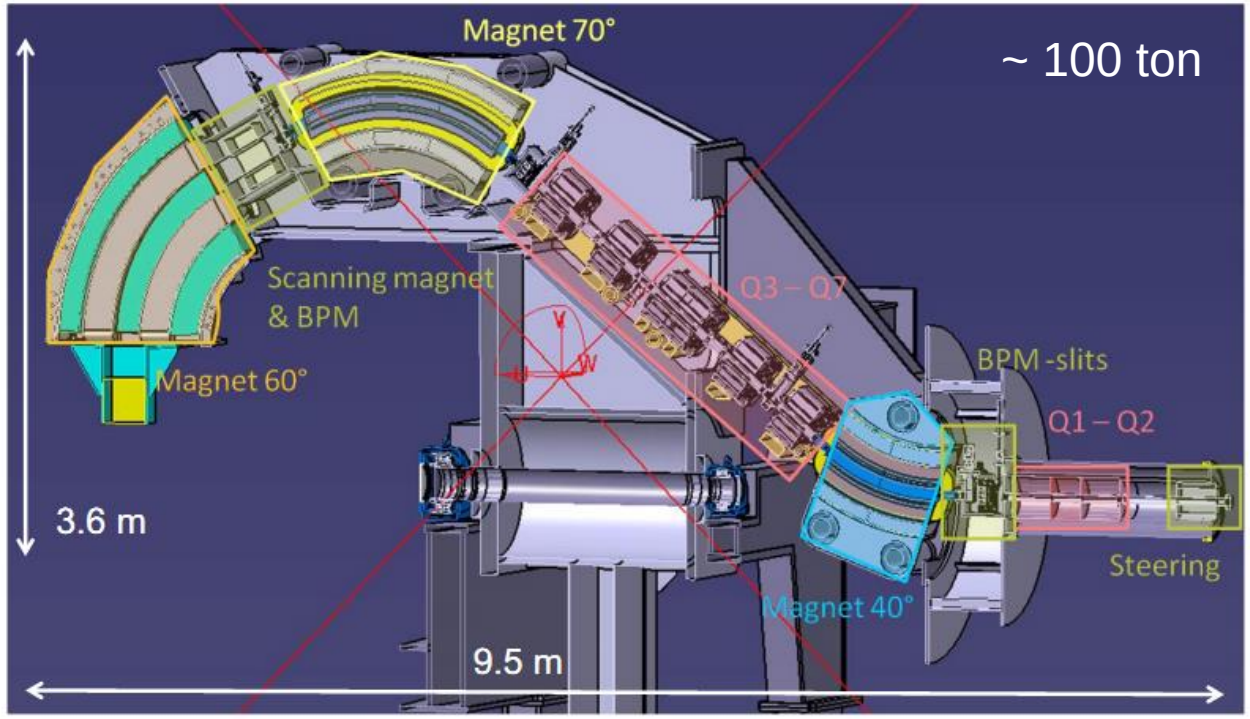


See presentation E. Pearson @ gantry workshop PSI (2015)

# The S2C2 : status

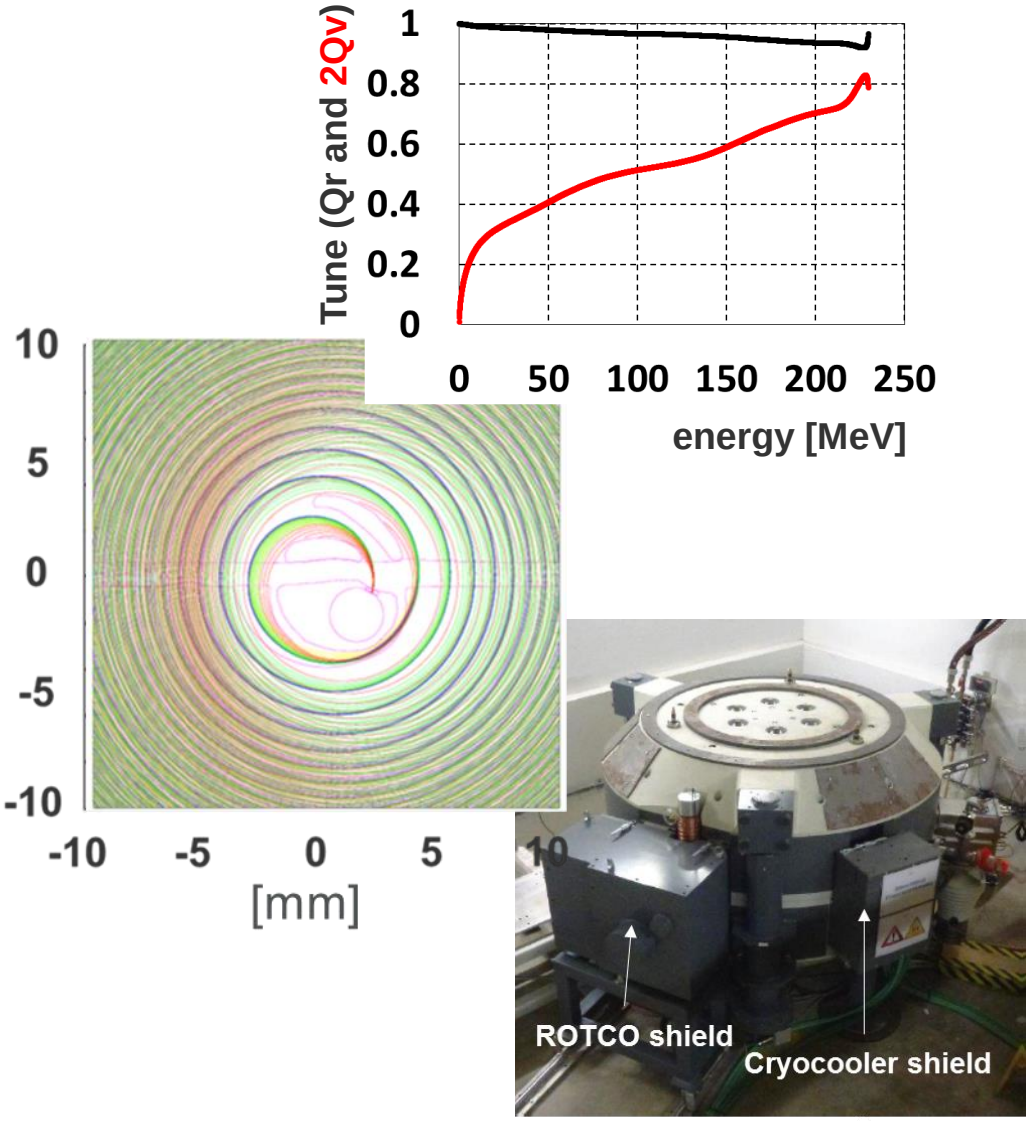


- Precise main coil positioning needed (<0.2 mm)
  - Beam direction
  - $Q_r=2Q_v$ (Walkinshaw resonance)
- Internal PIG ion source (very precise positioning needed)
- Dee voltage modulation @ injection (6 – 10 kV)
- RF frequency modulation by « ROTCO » (90-60 MHz)
- Pulsed beam : 1 kHz, 10 μsec long
- Superconducting coil (≈ 50 A/mm$^2$)
- Pulse-by-pulse intensity control :

  0.1 pC → 130 pC/pulse @ exit S2C2, or

  6E8 → 1E12 protons per second
- Power consumption ≈ 60 kW

# The S2C2 : status

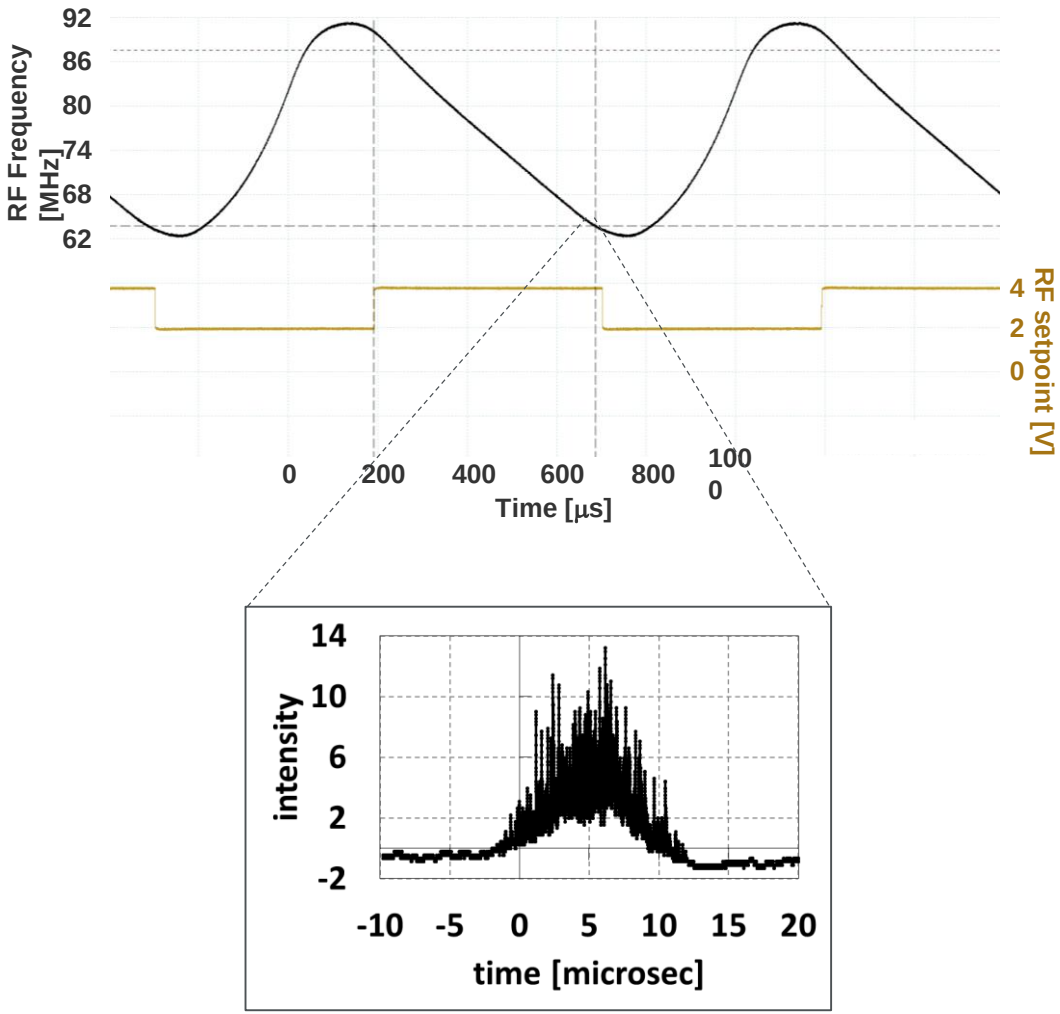


Diamond detectors (in collaboration with Cividec)

- Precise main coil positioning needed (<0.2 mm)
  - Beam direction
  - $Q_r=2Q_v$ (Walkinshaw resonance)
- Internal PIG ion source (very precise positioning needed)
- Dee voltage modulation @ injection (6 – 10 kV)
- RF frequency modulation by « ROTCO » (90-60 MHz)
- Pulsed beam : 1 kHz, 10 µsec long
- Superconducting coil (≈ 50 A/mm$^2$)
- Pulse-by-pulse intensity control :

  0.1 pC → 130 pC/pulse @ exit S2C2, or

  6E8 → 1E12 protons per second
- Power consumption ≈ 60 kW

# Cyclone400 : layout

- Design finalized / reviewed end of 2009

See : Y. Jongen *et al.*, NIM A, 624 (2010) 47-53

$^{12}C^{6+}$ / $^{4}He^{2+}$ : 400 MeV/u

$H_2^+$ : 265 MeV/u

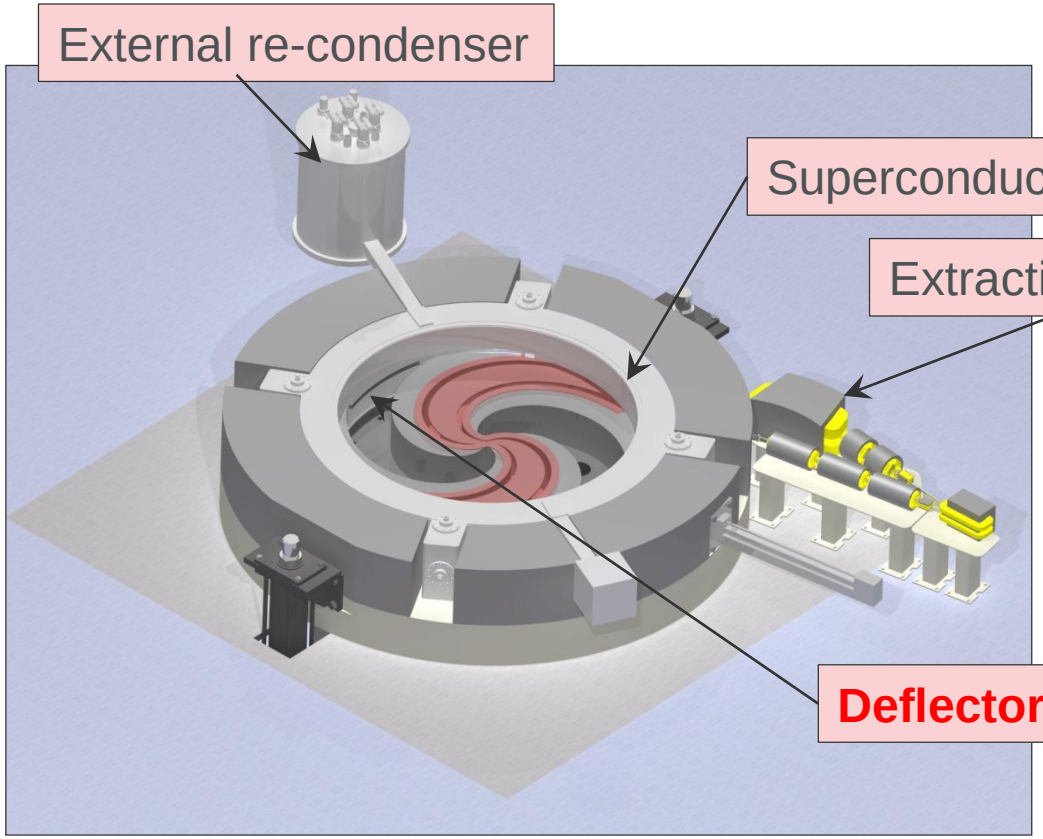


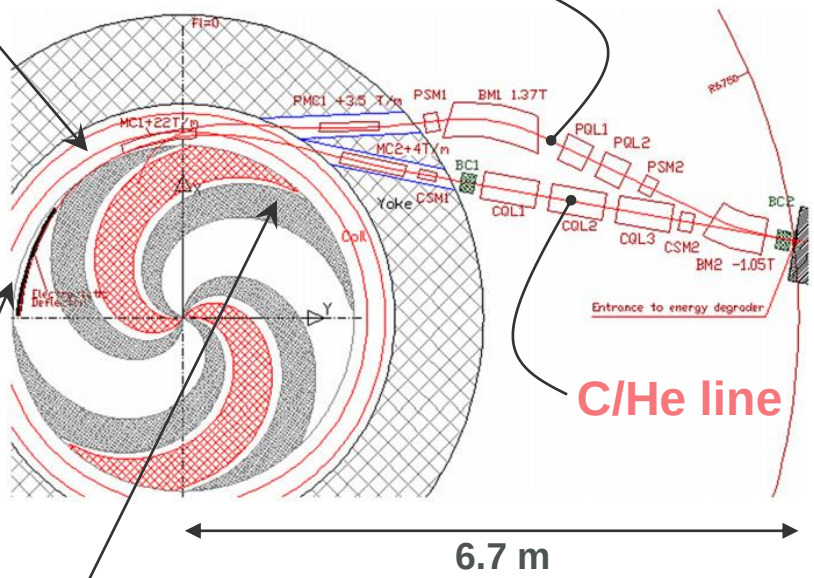

# Cyclone400 : a multi-particle accelerator

Y. Jongen *et al.*, NIM A, 624 (2010) 47-53
Y. Jongen *et al.*, Proceedings RuPAC 2010 (Protvino, Russia)

- Injection
  - 25 keV/Z : **$H_2^+$, $^4He^{2+}$, $^{12}C^{6+}$** ($^6Li^{3+}$, $^{10}B^{5+}$)
  - External ion sources (under the C400)
  - Spiral inflector
  - ≈ 1700 turns
  - RF : 75 MHz (4th harmonic, 80→170 kV)

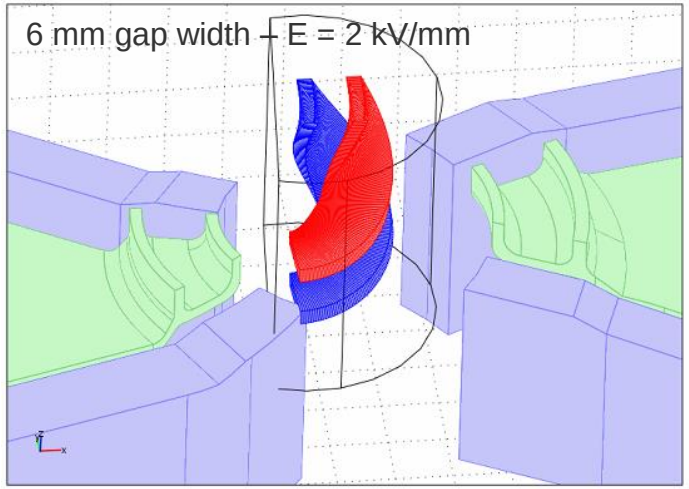


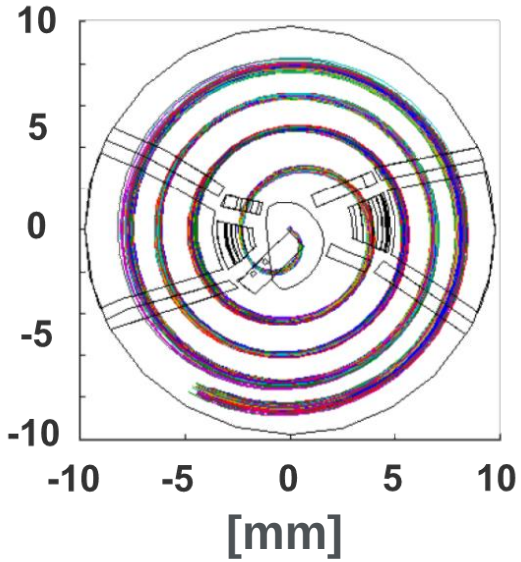


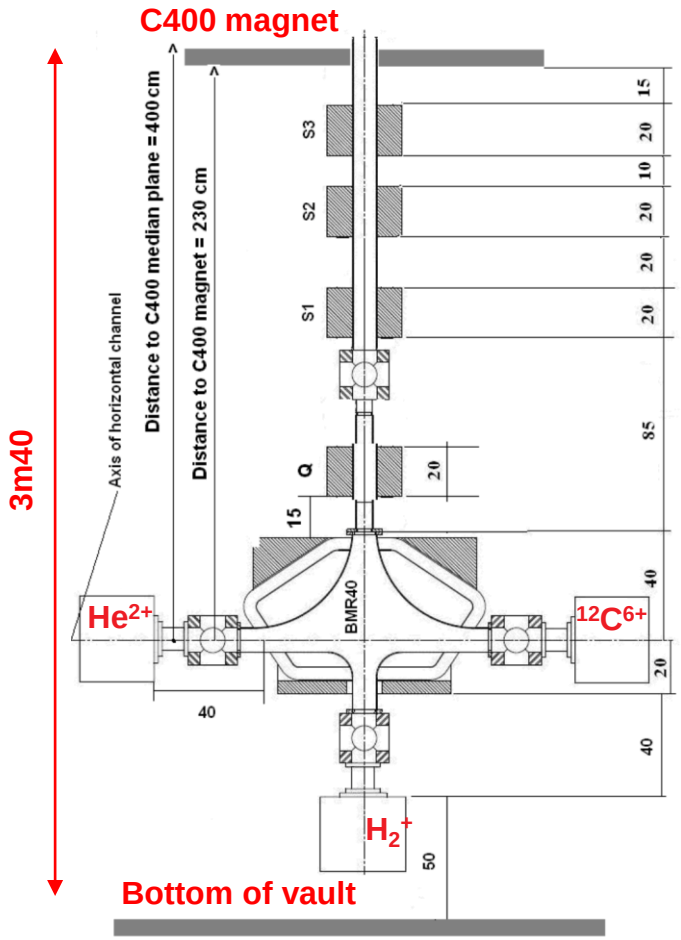

# Cyclone400 : energy degrader system

- Energy degrader + energy selection system

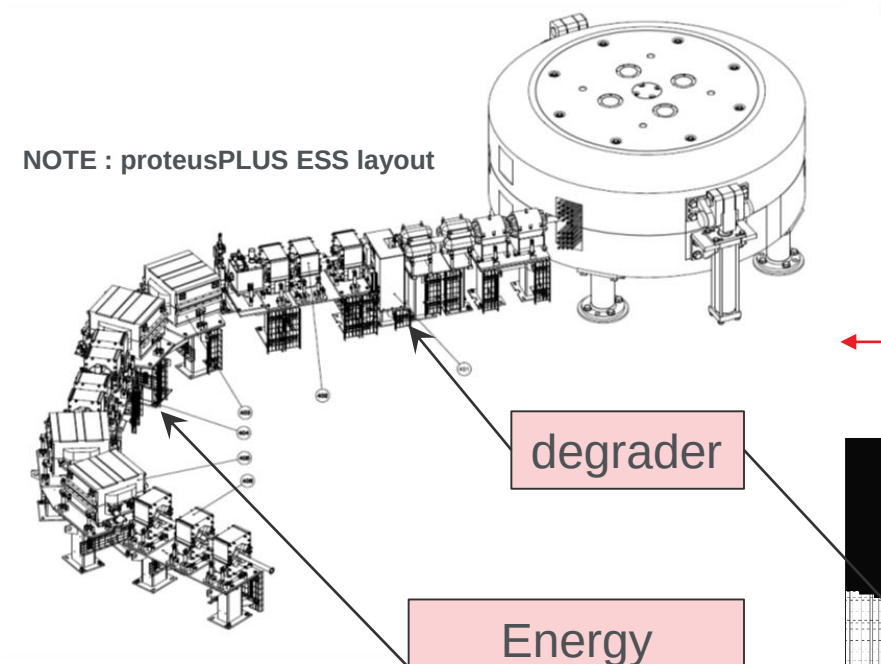


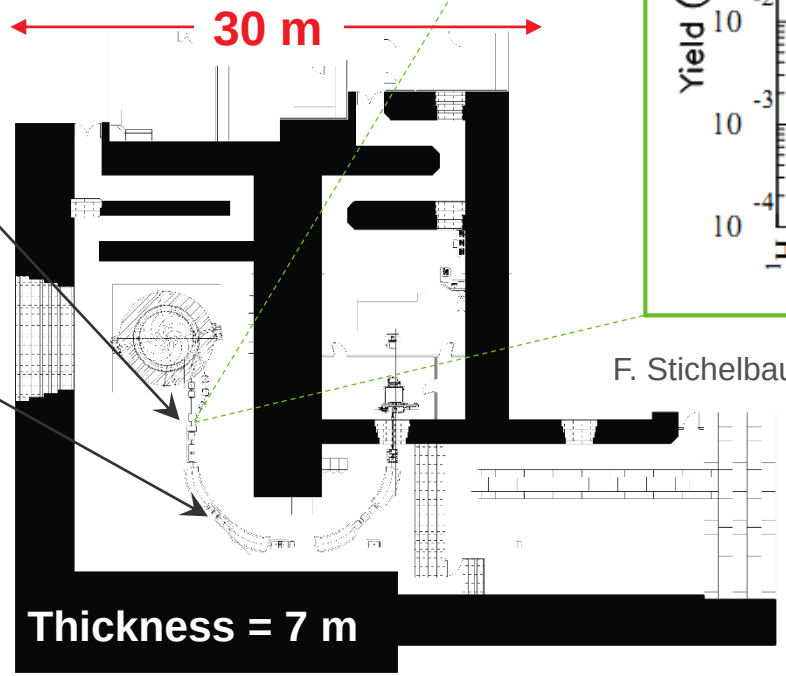


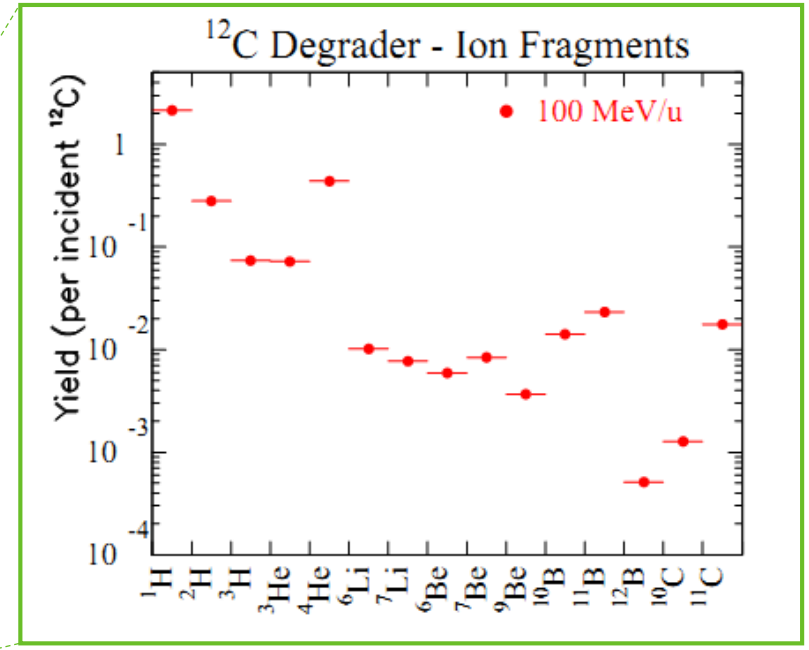


F. Stichelbaut *et al.*, Prog. Nucl. Science and Technology (2013)

# Cyclone400 : energy degrader system

- Energy degrader + energy selection system

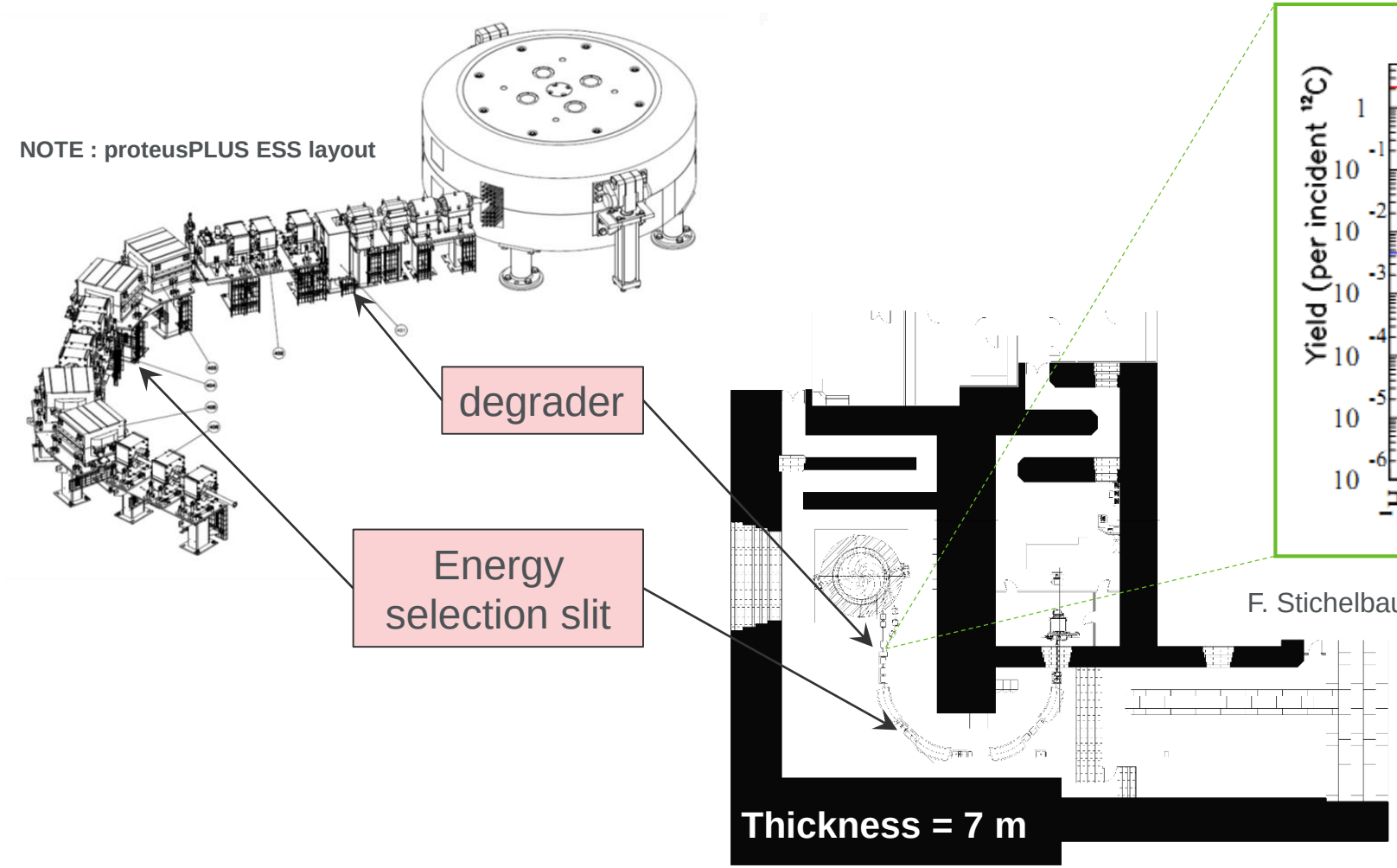


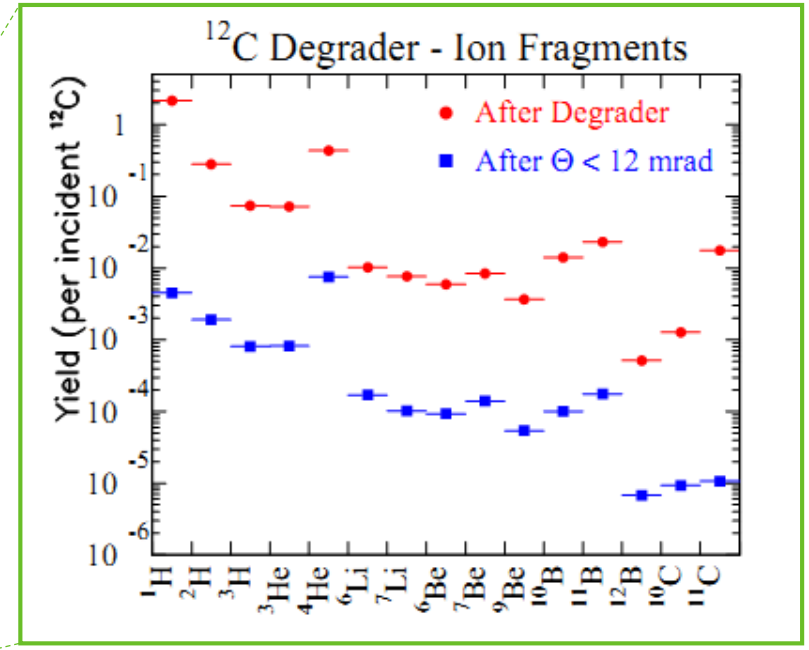


F. Stichelbaut *et al.*, Prog. Nucl. Science and Technology (2013)

# Cyclone400 : energy degrader system

- Energy degrader + energy selection system

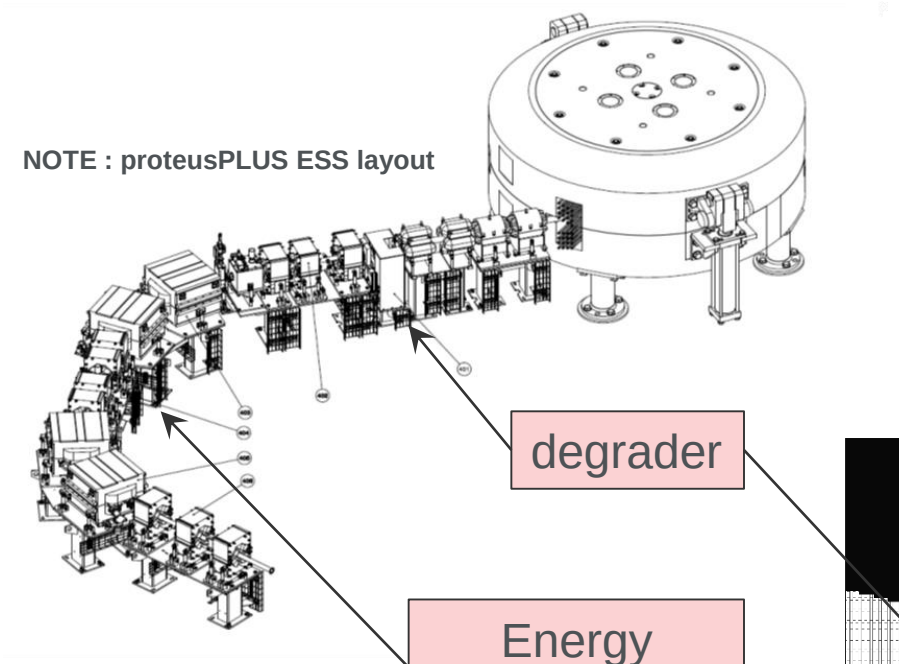


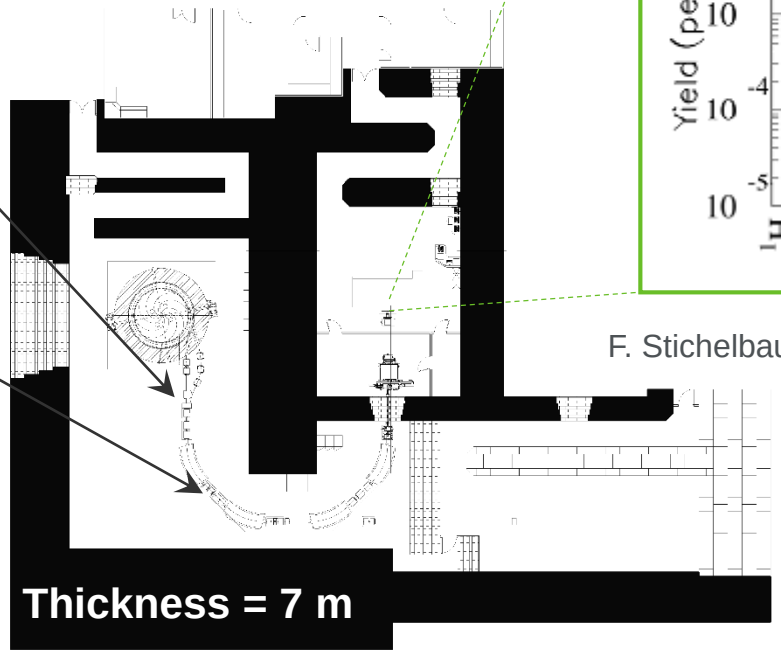


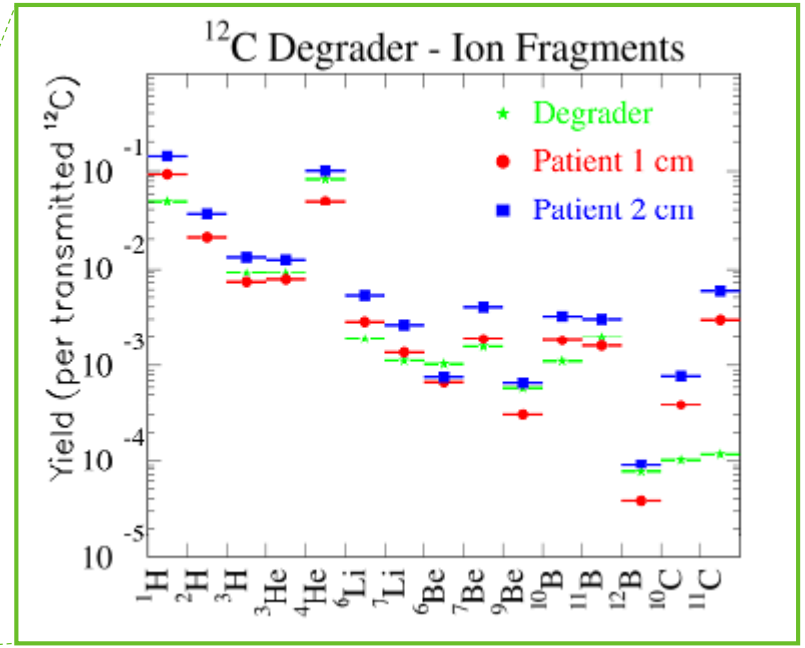


F. Stichelbaut *et al.*, Prog. Nucl. Science and Technology (2013)

# Cyclone400

- Construction ?

**Phase 1**
**Installation of a protontherapy center**

**Phase 2**
**Development of the carbon solution based on the C400**

CYCLHAD

Normandy Hadrontherapy

✓ Industrial consortium, incl IBA
✓ Design and development of the C400.
✓ Installation, testing and commissioning of the prototype in CYCLHAD's building

**Louvain-la-Neuve, BE**


**Caen, FR**

Protect, Enhance and Save Lives

# Thank you !

Jarno Van de Walle

Accelerator physicist

Jarno.vandewalle@iba-group.com

# ProteusPLUS vs ProteusONE

## Proteus® PLUS

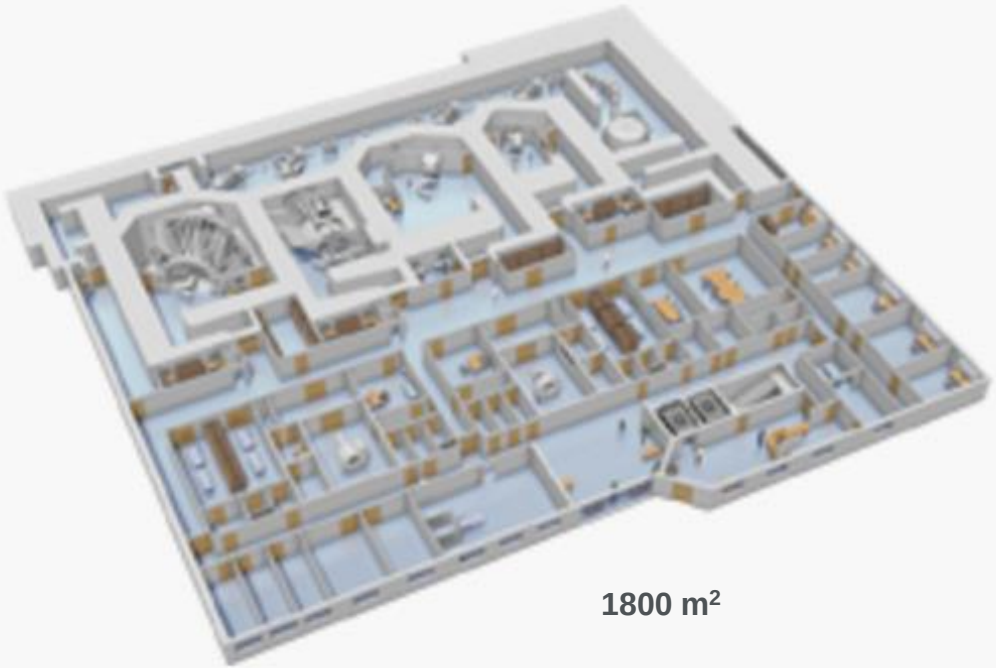

1800 m²

The universal proton therapy solution

## Proteus® ONE

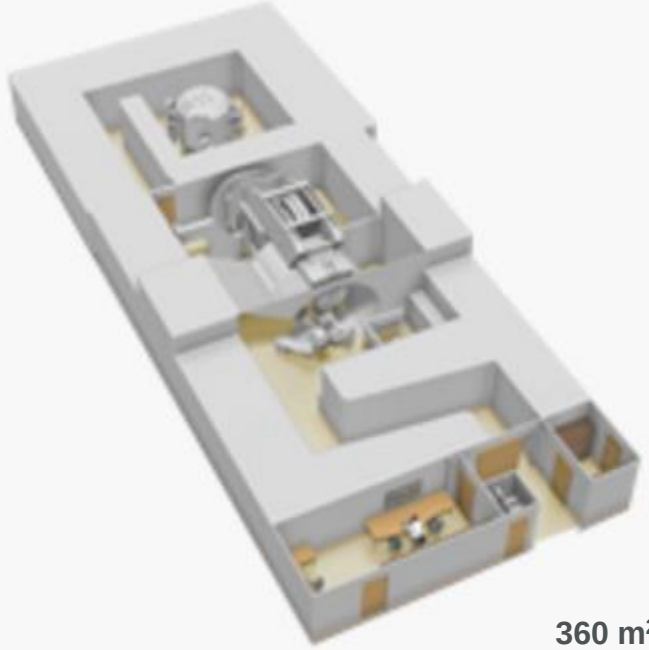

360 m²

The compact and affordable proton therapy solution

# ProteusPLUS vs ProteusONE

ABOUT IBA | INVESTOR RELATIONS | MEDIA ROOM | UPGRADE YOUR CAREER

Homepage › Article

**13.11.2015**

## IBA SIGNS FINAL CONTRACTS TO INSTALL THREE COMPACT PROTON THERAPY CENTERS IN THE UNITED KINGDOM

IBA has signed contracts with Proton Partners International (PPI) to install three Proteus®ONE compact proton therapy systems in private clinics in the United Kingdom: one in Newport (Wales), one in Newcastle (England) and a third location to be identified at a later stage.

Read it in: FR EN

# Degrader and gantry