Pre-installation spectral response analysis of the HiLumi LHC crab cavity HOM couplers

Thermal simulations will also be presented

Presenter: **James Mitchell (1st Year PhD Student)**

Supervisors: Graeme Burt (Lancaster University)

Rama Calaga (CERN)

Date: 23rd August 2016

ICFA Mini Workshop on Higher Order Modes in Superconducting Cavities 2016

Introduction and overview

- The LHC
  - The HiLumi Upgrade
- Crab cavities
- The Double Quarter Wave (DQW) crab cavity
  - DQW HOM couplers
- **HOM coupler test boxes**
  - L-bend transmission
  - Coaxial chamber
- Test box manufacture
- Future test boxes
  - High power test box
- **Thermal simulations**

The LHC and the HiLumi Upgrade

- The Large Hadron Collider (LHC) is the largest particle accelerator in the world at 27 km in circumference.
- The peak luminosity value for the LHC in current operation is $1 \times 10^{34}\ cm^{-2}s^{-1}$.
  - This corresponds to an integrated luminosity value of $40\ fb^{-1}$ per year.
- The High Luminosity Upgrade aims to increase the peak luminosity to $5 \times 10^{34}\ cm^{-2}s^{-1}$.
  - Corresponding to $250\ fb^{-1}$ per year.
- One aspect of the upgrade are the **superconducting RF crab cavities**.

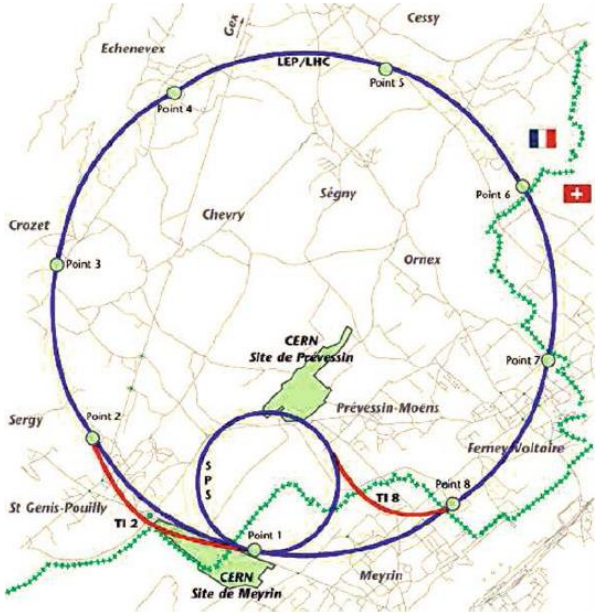

Map showing the location and size of the Large Hadron Collider (LHC) [1].

The HiLumi upgrade

- The HiLumi upgrade aims to increase the luminosity by decreasing the value of β^* in the luminosity equation.
- β^* is the value of the beta function at the Interaction Point (IP).
- However, the mechanisms adopted to achieve this incur a reduction in the crossing angle (θ_c).

$$L = \gamma \frac{n_b N^2 f_{rev}}{4\pi\beta^* \epsilon_n} R, \quad R = \frac{1}{\sqrt{1 + \frac{\theta_c \sigma_z}{2\sigma}}}$$

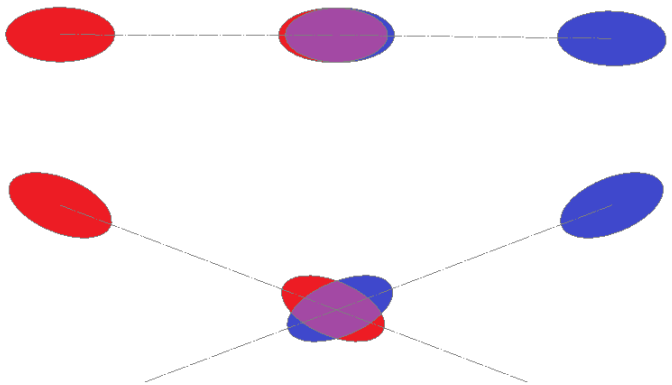

Ideal head-on collision and collision with an induced crossing angle for two charged particle bunches.

Crab cavities – correcting the crossing angle

- In order to correct for the luminosity loss, crab cavities are used to rotate the bunches – creating head-on collisions in the lab frame.
- **Crab Cavities** operate in the transverse dipole mode, phased at the zero crossing to provide a rotation of the bunch - this is known as the crabbing regime.
- The crab cavity designs selected for the HiLumi upgrade are the Double Quarter Wave (DQW) and Radio Frequency Dipole (RFD).
  - These will be tested in the SPS in 2018.

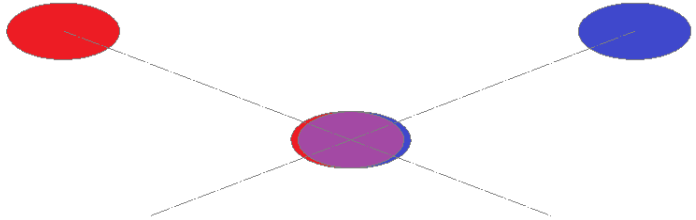

Crabbing of the bunches to provide head-on collisions in the lab frame.

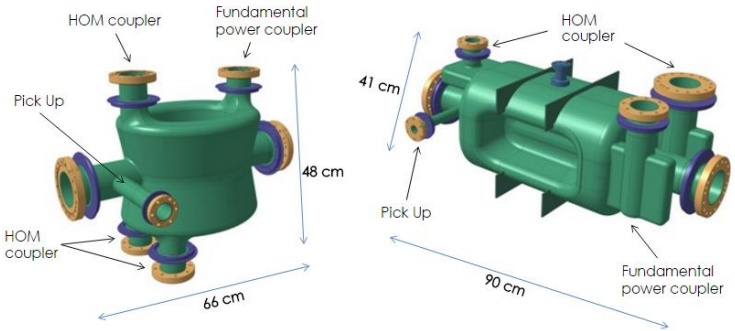

DQW (left) and RFD (right) crab cavities for the HiLumi LHC upgrade [2].

Crab cavities – correcting the crossing angle

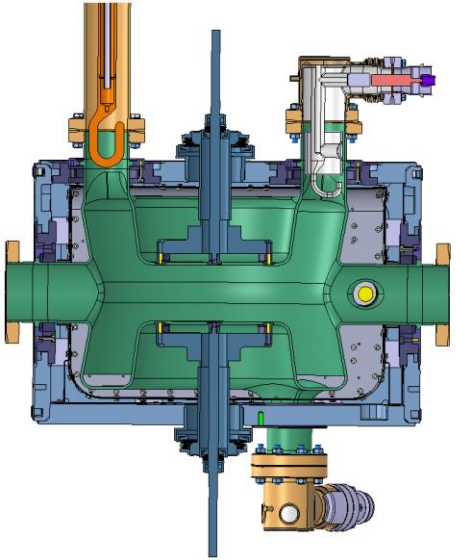

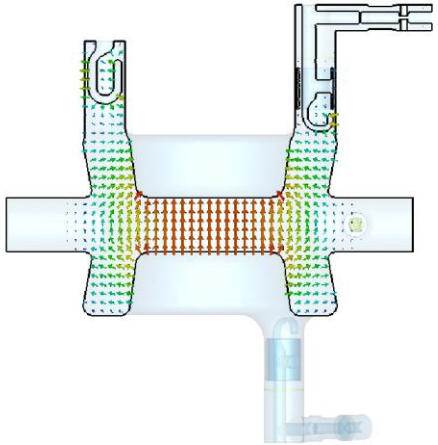

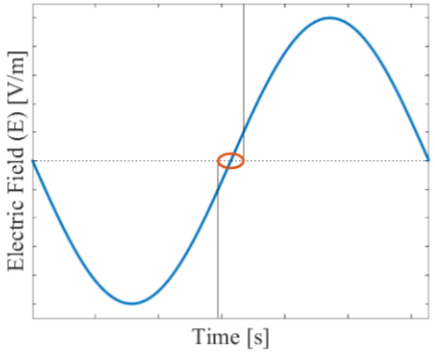

Bunch rotation due to the sinusoidally varying transverse kick.

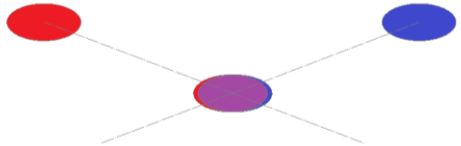

Double Quarter Wave (DQW) crab cavity

- The DQW was developed at BNL and is now the first of two crab cavities to be tested on the SPS.
- In addition to the crabbing mode, there exists several higher order modes (HOMs).
- If excited by the beam, these HOMs alter the electromagnetic field within the cavity.
- This can have detrimental effects to the particle bunches by:
  - Accelerating/decelerating.
  - Adding energy spread,
  - Providing a kick/rotation.

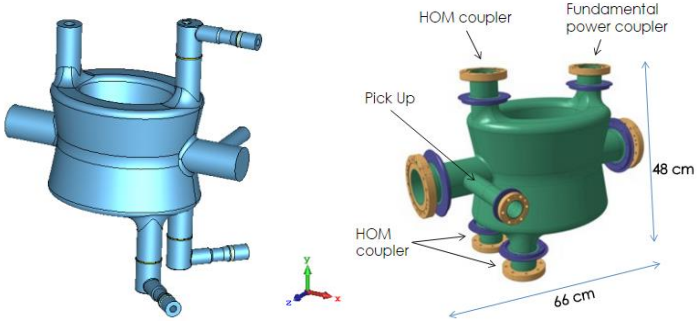

[2]

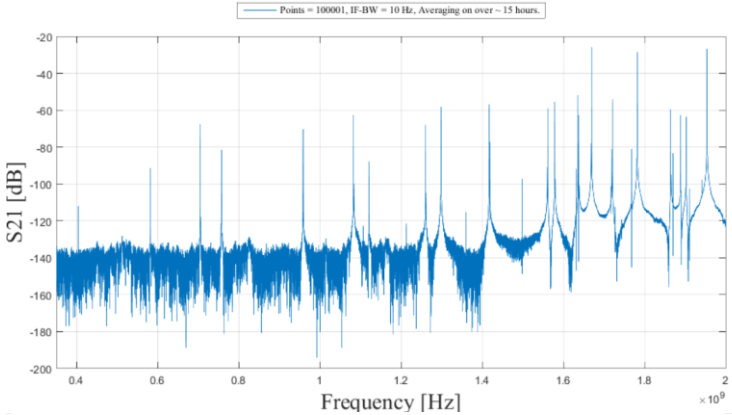

Measured S_{21} response of the niobium PoP DQW crab cavity at 2 K.

DQW HOM couplers

- Use an LC band-stop (a) structure and an L-shaped high-pass filter (b) to achieve the required filter response.
- The HOM couplers for the DQW are on-cell couplers.
  - Better damping is achieved by this.
  - But the hooks are located in high field.
- The HOM couplers were originally designed for the Lancaster 4-Rod crab cavity and altered for the DQW.
- LC band-stop filter is located near the hook so that there is no heating of the copper gasket.
- Cooled by immersion in the liquid helium – hollow inner conductor.

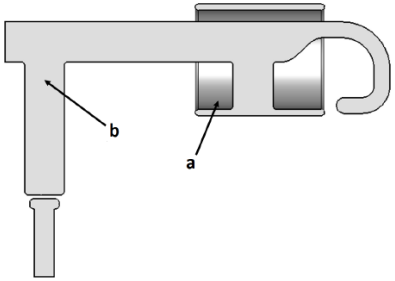

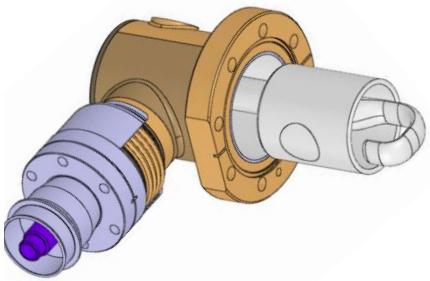

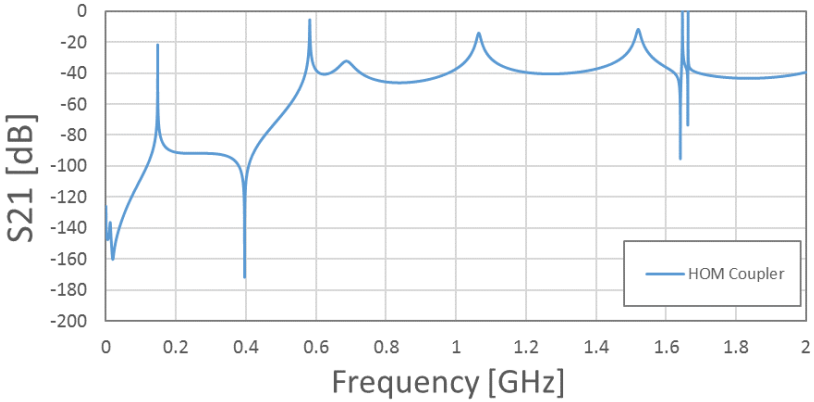

HOM coupler test boxes

- Simulation studies show that the HOM couplers are very sensitive to manufacturing tolerances.
- Therefore small **geometric defects** can severely effect the **filter response**.
- Hence a design study for potential test boxes was undertaken.
- **OBJECTIVE: Can we analyse the spectral response of the HOM couplers before installation?**

L-bend

- In order to measure the frequency response of the HOM coupler reliably, a probe design is required which accurately reproduces the coupler response.
- Several coupling techniques were trialled.
- Best method's had an inductive path to ground.

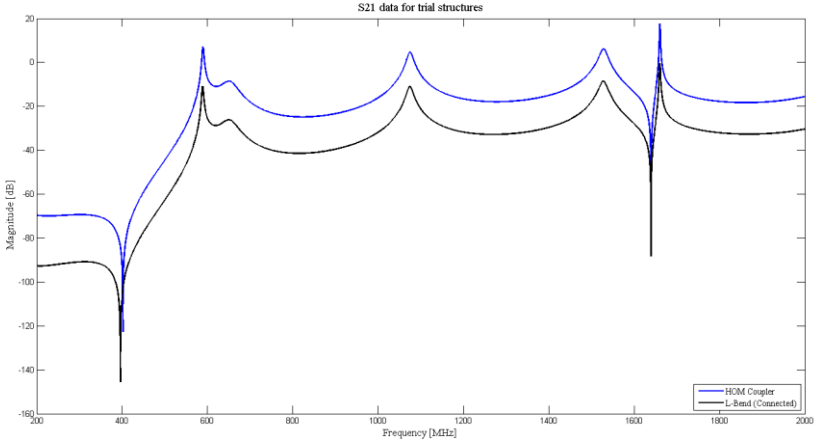

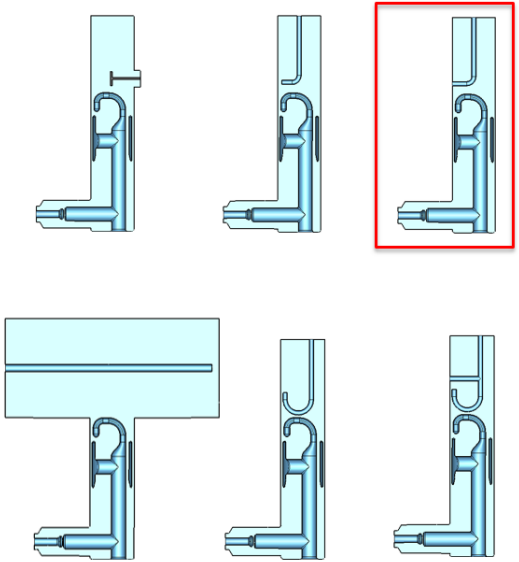

L-bend

- Multi-port system designed.
- Low power spectral analysis.
- This design also allows high power testing, i.e. a transmission of power from HOM coupler port to the other.
- Validation possible with multiple ports.
- Inherent symmetry improved response.
- Can still use one coupler – blanking plate.
- Reproduces the 400 MHz rejection very well.

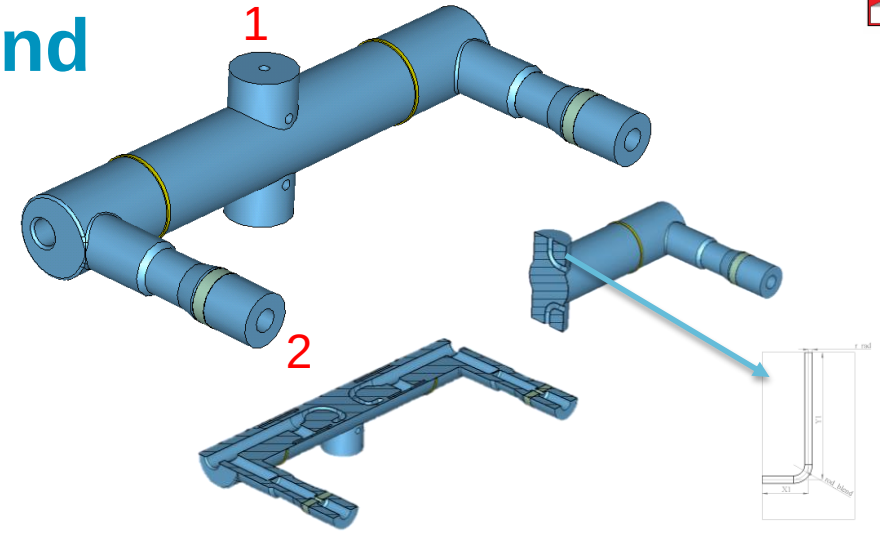

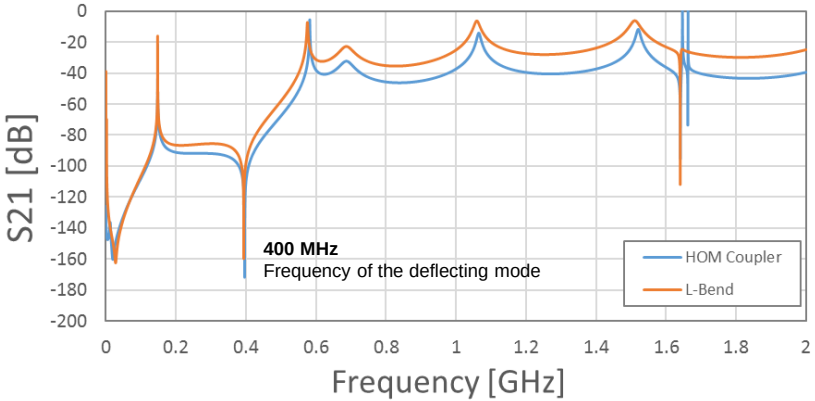

Coaxial chamber

- Four port symmetrical device.
- Uses an ‘off-the-shelf’ coaxial line with connectors which allow reduction to 7-16/N-type.
  - Robust system as manufacturing tolerances are not
- However this means that optimisation parameters are very limited.
- Worse representation of the deflecting mode frequency.
- Another PoP for high power test box.

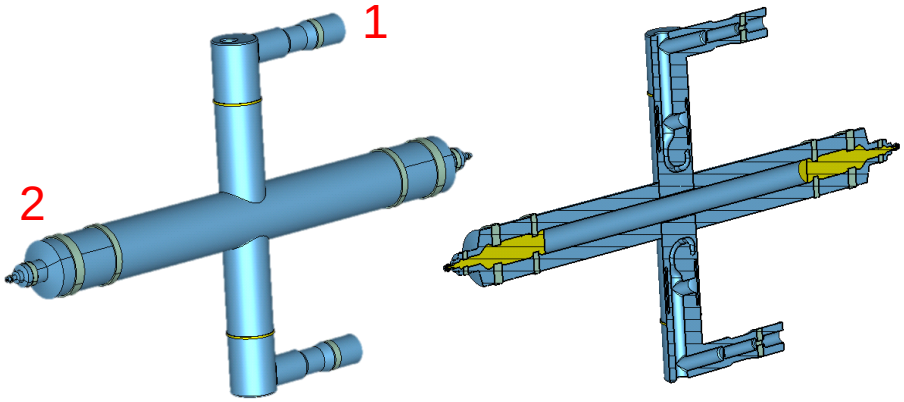

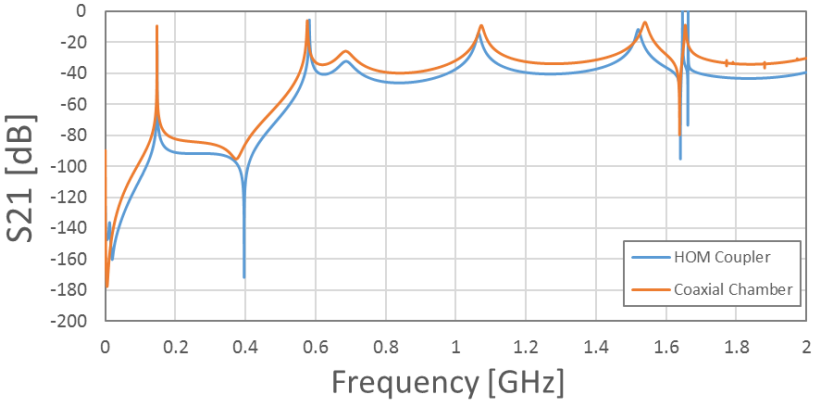

Manufacture

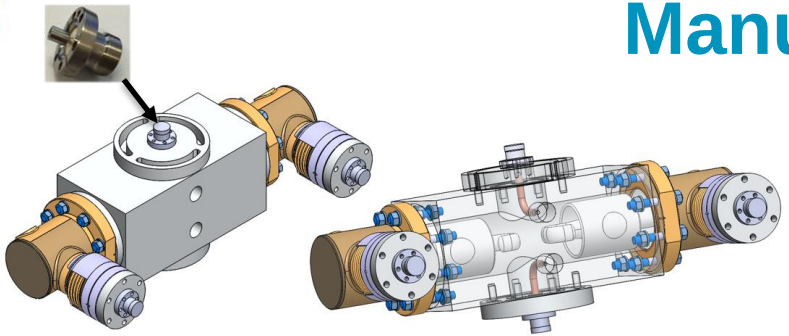

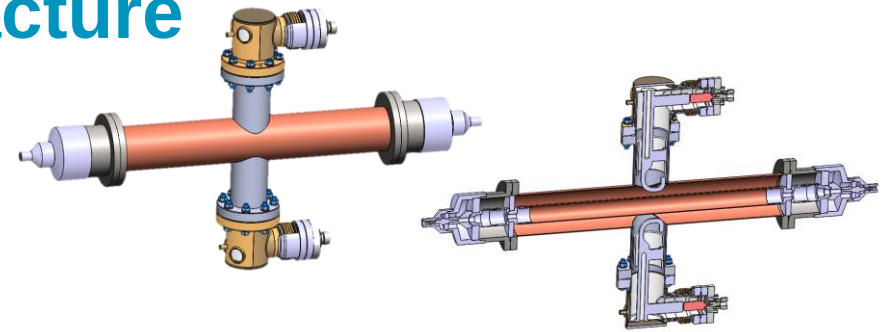

HOM Coupler

L-bend test box body

Coaxial chamber – 3-1/8”coax line

High power conditioning

- High transmission between HOM ports needed for conditioning.
- DQW Fundamental Power Couplers (FPC) test boxes designed with this principle.

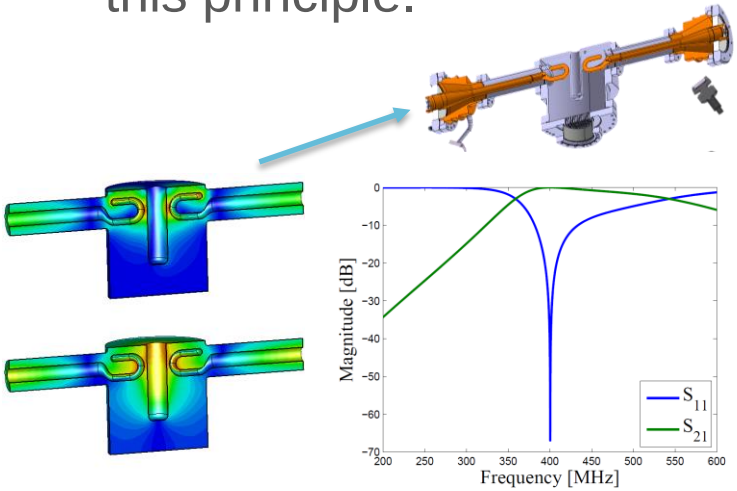

DQW FPC test box for high power conditioning.

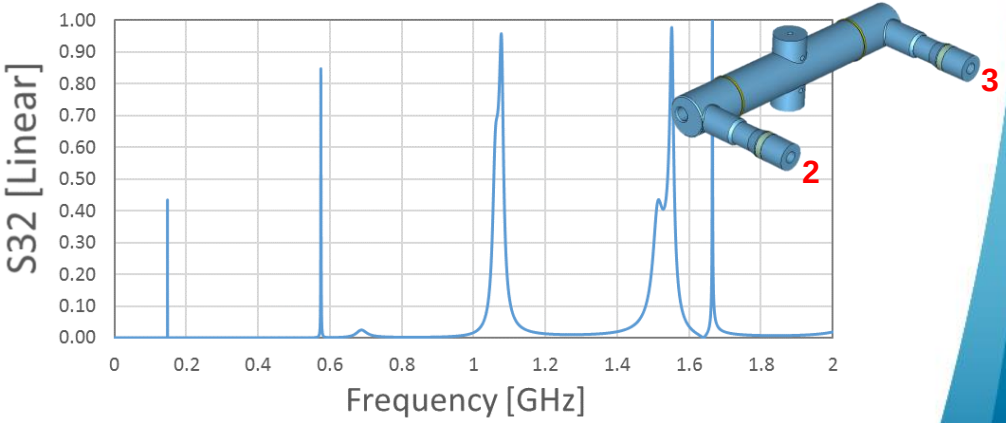

Thermal simulations

- The electrical and thermal conductivities of Niobium vary with temperature significantly in the super conducing regime (0-9 K).
- Previously, this has been taken into account in post processing.
- However, CST MWS allows this to be taken into account.

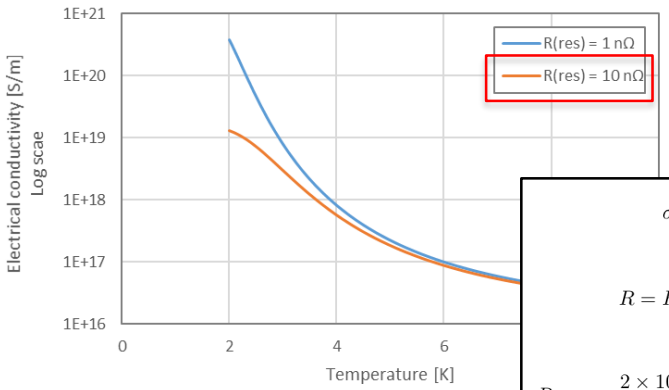

$$\sigma = \frac{\mu_0 \pi f_{Hz}}{R^2}$$

$$R = R_{BCS} + R_{residual}$$

$$R_{BCS} = \frac{2 \times 10^{-4}}{T} \times \left(\frac{f_{GHz}}{1.5}\right)^2 \times e^{\frac{-17.67}{T}}$$

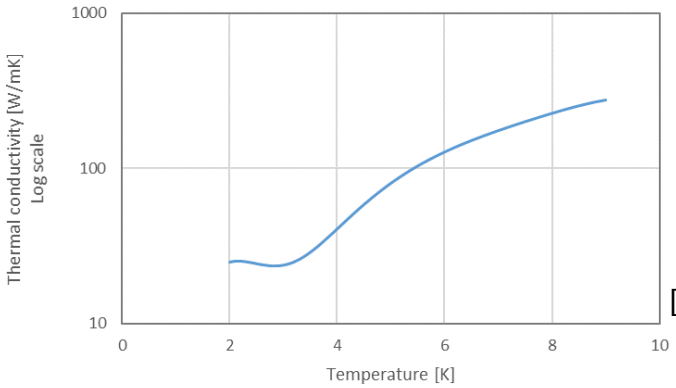

[4]

Thermal simulations

- Thermal loss map created from Eigen-mode simulation.
- CST normalises the fields in the cavity to 1J stored energy – fields re-normalised to nominal values during operation.
- Temperature of couplers can then be inferred.
- Currently – The new electrical and thermal conductivities need to be imported back into the EM simulation and this process needs to be iterated.
  - This will allow the variable electrical and thermal conductivities to be accounted for.

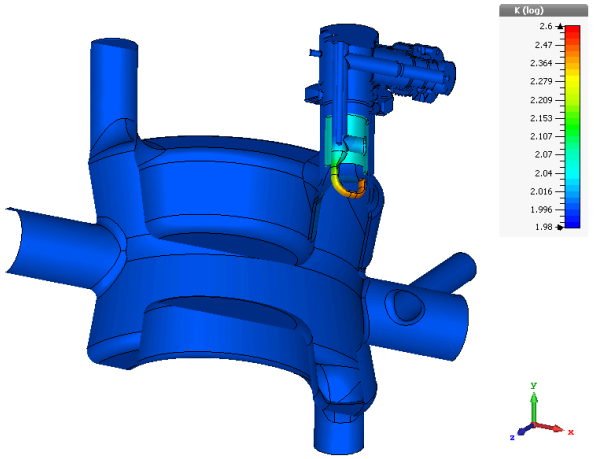

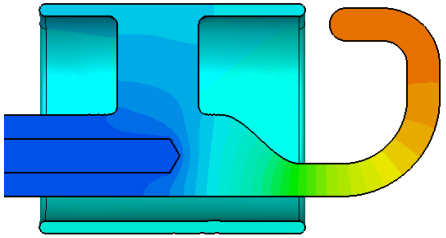

Thermal simulations

- **<u>Next steps…</u>**
- Take into account that there is a magnetic field present which **varies** due to the location of the **magnetic shield**.
- To do this, the coupler will be split into sections and the residual resistance of each section will be changed to correspond to the value of the external magnetic field.

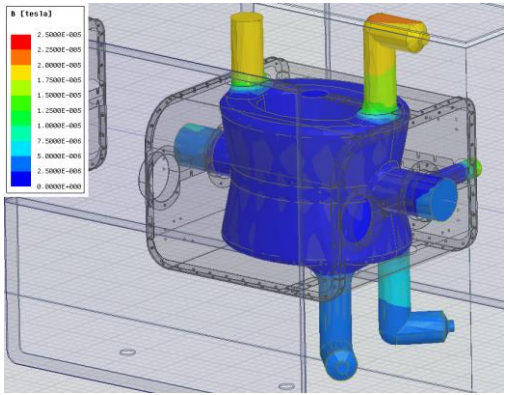

[5]

Summary and Questions

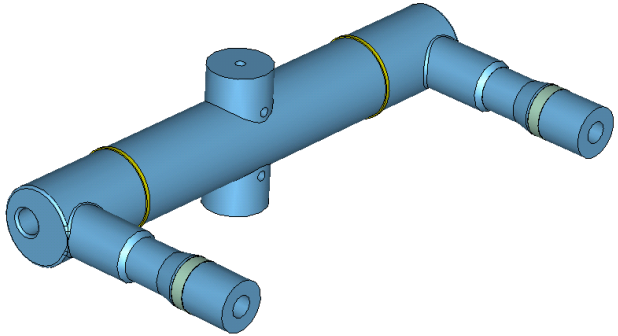

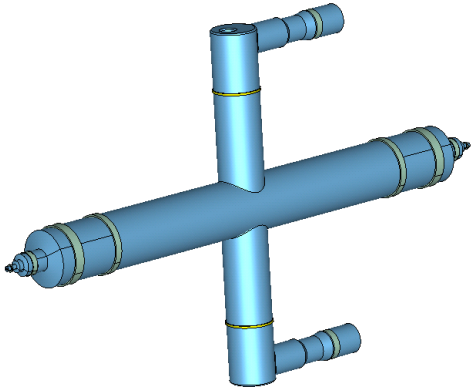

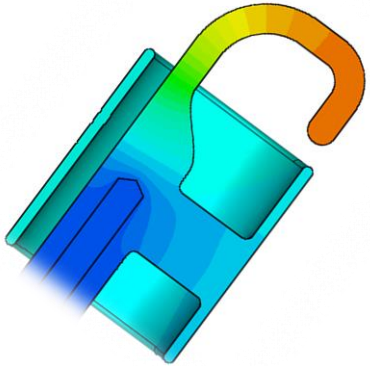

[1] M. Beech, The Large Hadron Collider: Unravelling the Mysteries of the Universe. Springer Science & Business Media, 2010.

[2] W. Qiong, Crab Cavities: Past, Present and Future of a Challenging Device. 6th International Particle Accelerator Conference, May 3-8, 2015.

[3] M. Navarro, Bead-Pull Measurements on the Fundamental Mode of the Double-Quarter-Wave Crab Cavity, CERN-ACC-NOTE-2015-0020.

[4] P. Dhakal, Superconducting DC and RF properties of Ingot Niobium. Thomas Jefferson National Accelerator Facility, CA 23606, US.

[5] C. Zanoni, Magnetic shielding simulations for the Double Quarter Wave (DQW) crab cavity, Work Package 4, HiLumi LHC, CERN.

J. A. Mitchell. et al. LHC Crab Cavity Coupler Test Boxes. in Proc. IPAC16, Busan, Korea, May. 2016, paper WEPMB058, pp.2248-2250.

Computer Simulation Technology, Bad Nauheimer Str. 19 D-64289 Darmstadt Germany, http://www.cst.com.

Special thanks go to:

R. Apsimon
A. Bucherie
J. Gates
E. Montisinos

Traditio et Innovatio

James Mitchell
j.a.mitchell@lancaster.ac.uk

Other HOM related work

- DQW mechanical tuner tests at 2K.
- The spectral response of the deflecting mode and two HOMs were taken at various positions of the motor.
- The frequency deviation per step and hysteresis loss could be quantified for each of the resonances looked at.
- The measurements of the HOMs will allow us to calculate the RRR by taking the ratios of the Q-factors at ~10 K and 300 K.
  - This is difficult with the deflecting mode as it is very weakly coupled at 300 K and thus it is difficult to get a Q-factor from this.

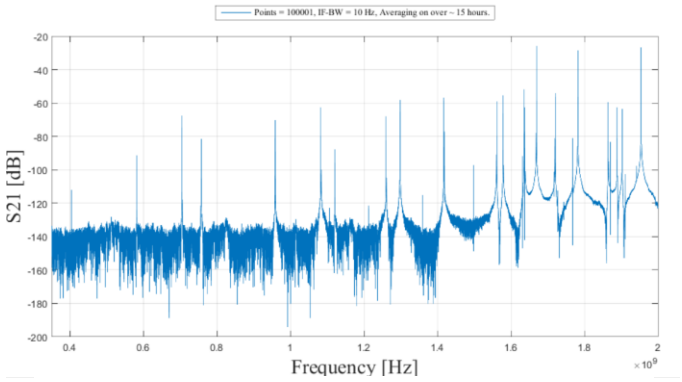

Full spectral analysis of DQW at 2K from 350 MHz to 2 GHz.

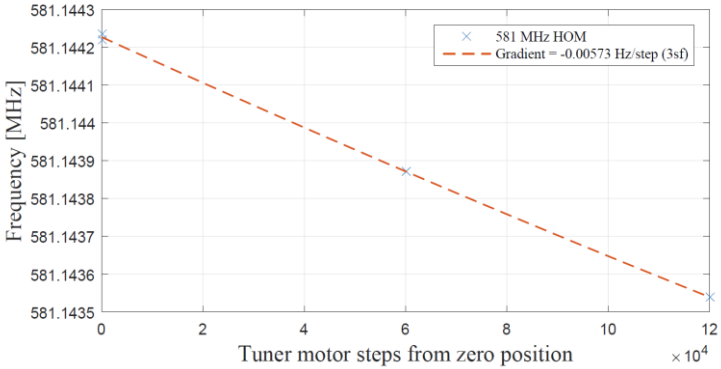

Example of method used to quantify effect of mechanical tuner on HOM frequency.