# Overview of MATS detector at FAIR and Trap program in India

Parnika Das

**Variable Energy Cyclotron Centre**

# At FAIR
# Low Energy Branch (LEB) of the Superconducting FRagment Separator (Super-FRS)

**MATS** (Precision **M**easurements of very short-lived nuclei using an **A**dvanced **T**rapping **S**ystem)

**LaSpec** (**La**ser **Spec**troscopy of short-lived nuclei)

**Penning-trap based mass spectrometry and laser spectroscopy**

Nuclear ground state properties extended to the region far from stability
mass, charge radii, spins, moments …

# MATS FACILITY

- A relative mass uncertainty of $10^{-9}$

✓highly-charged ions

✓a non-destructive Fourier-Transform Ion-Cyclotron-Resonance (FT-ICR)detection technique

✓single stored ions

(a) Isomer resolution

(b) Test of the conserved vector current hypothesis and the unitarity of the CKM matrix:

(c) Nuclear structure and the new masses:

(d) Nuclear masses far from stability to test new mass models:

(e) Astrophysics

(f) Spectroscopy on highly-charged ions

(g) In-trap conversion electron and alpha spectroscopy:

(h) Trap-assisted and neutron spectroscopy

Review

# MATS and LaSpec: High-precision experiments using ion traps and lasers at FAIR

Eur. Phys. J. Special Topics 183, 1–123 (2010)
DOI: 10.1140/epjst/e2010-01231-2

# Advantages of using a TRAP

**PROVIDES**

***An ENVIRONMENT FOR PRECISION MEASUREMENT***

***As in a trap there is…***

- *Well controlled environment*
- *Small size and energy distribution of the source*
- *Long and repeated observations possible*

***So advantages of in TRAP studies***

- ***$\beta$- decay studies*** : ***No source scattering***
  ***Recoil ion study possible***
- ***Spectroscopic studies***: ***Isolation of a decay article***
  ***Repeated measurement possible***
- ***Angular Distribution of decay particles*** :
  ***Source size small***

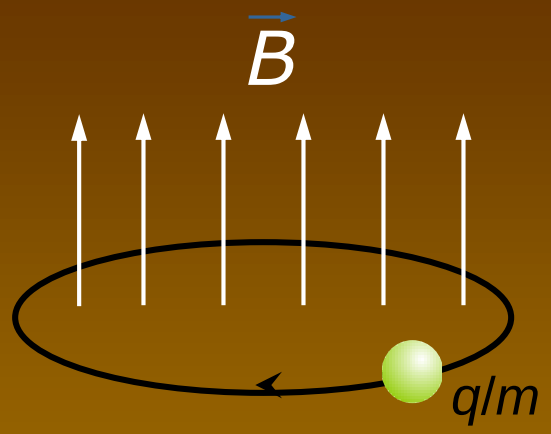


# Princple of Penning Ion Trap working

**Cyclotron frequency:** $$f_c = \frac{1}{2\pi} \cdot \frac{q}{m} \cdot B$$

## Hyperbolic

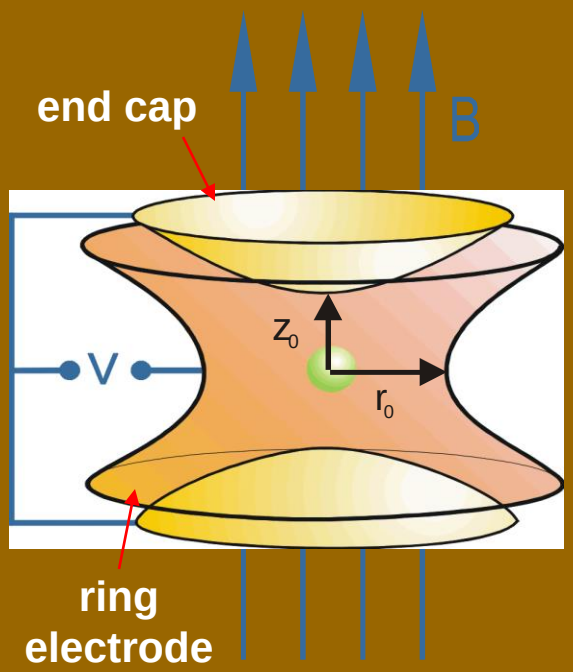


## PENNING trap

- **Strong homogeneous magnetic field**
- **Weak electric 3D quadrupole field**

**Frans Michel Penning**

**Hans G. Dehmelt**

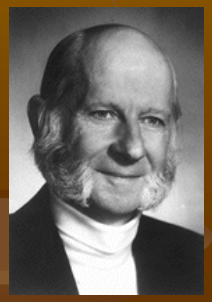

## Cylindrical

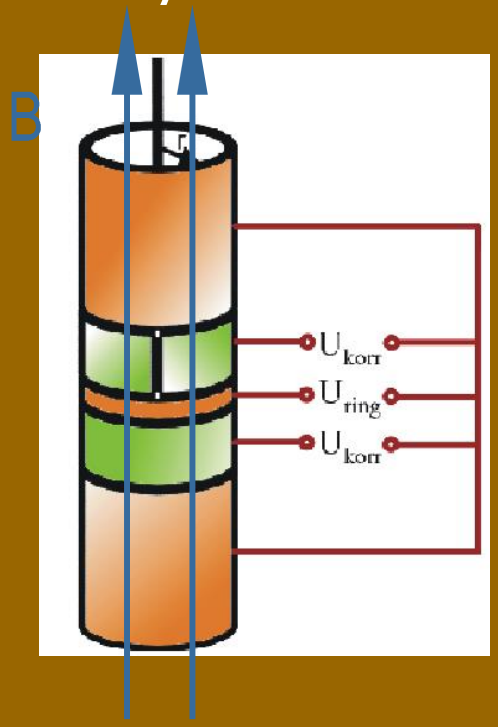

Motion of an ion is the superposition of three characteristic harmonic motions:

- axial motion (frequency $\nu_z$)
- magnetron motion (frequency $\nu_-$)
- modified cyclotron motion (frequency $\nu_+$)

$$\nu_z = \frac{1}{2\pi}\sqrt{\frac{qV}{md^2}}$$

$$\nu_\pm = \frac{\nu_c}{2} \pm \sqrt{\frac{\nu_c^2}{4} - \frac{\nu_z^2}{2}}$$

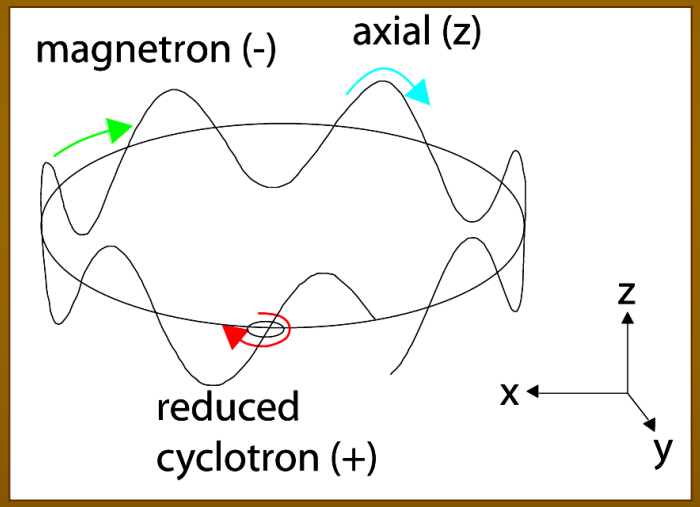


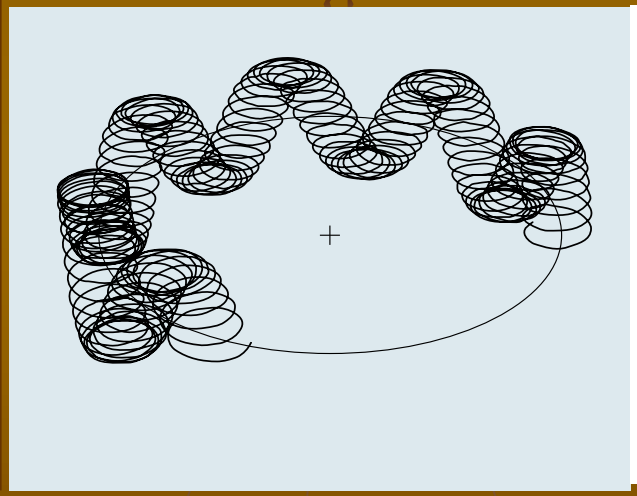

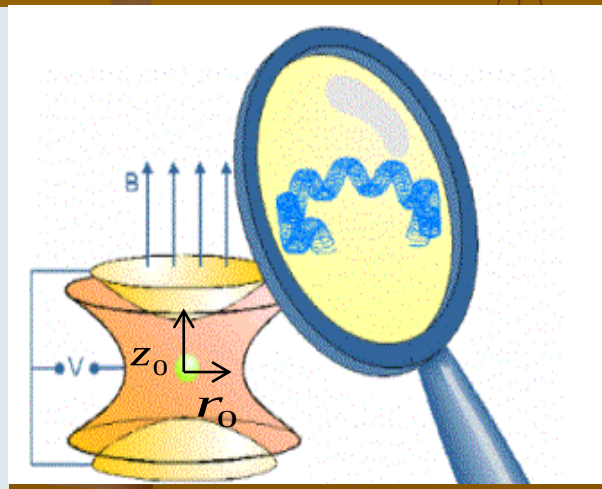


**The frequencies of the radial motions obey**

$$\nu_c = \nu_+ + \nu_-$$

$$\nu_c = \frac{1}{2\pi}\cdot\frac{q}{m}\cdot B$$

$$d^2 = \frac{1}{2}(z_0^2 + r_0^2)$$

# Detection by *Non destructive IMAGE CHARGE*

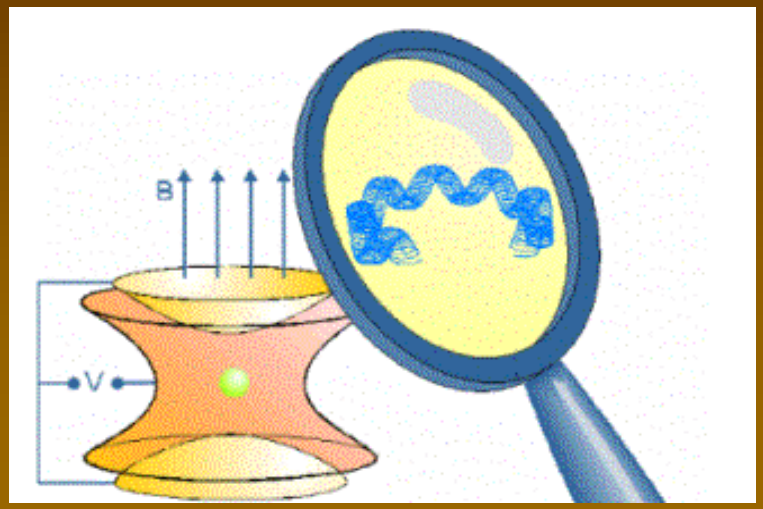


## Broad band detection

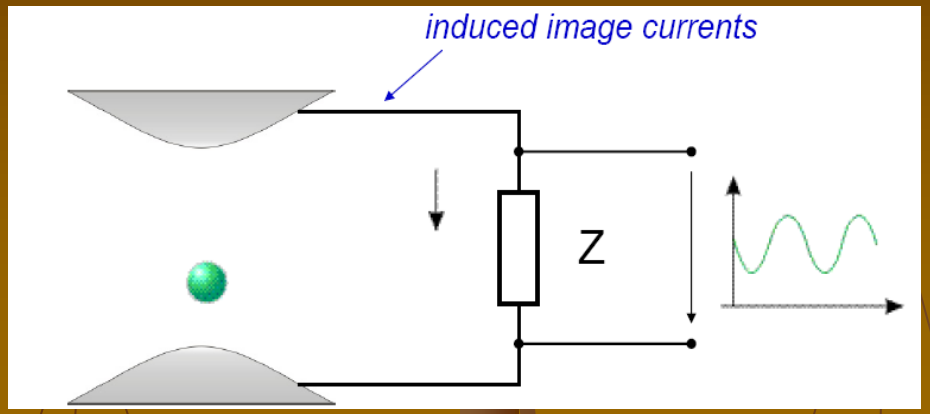


induced current: $I_{eff} = 1/\sqrt{2} \cdot r_{ion} / D \cdot \omega \cdot q$

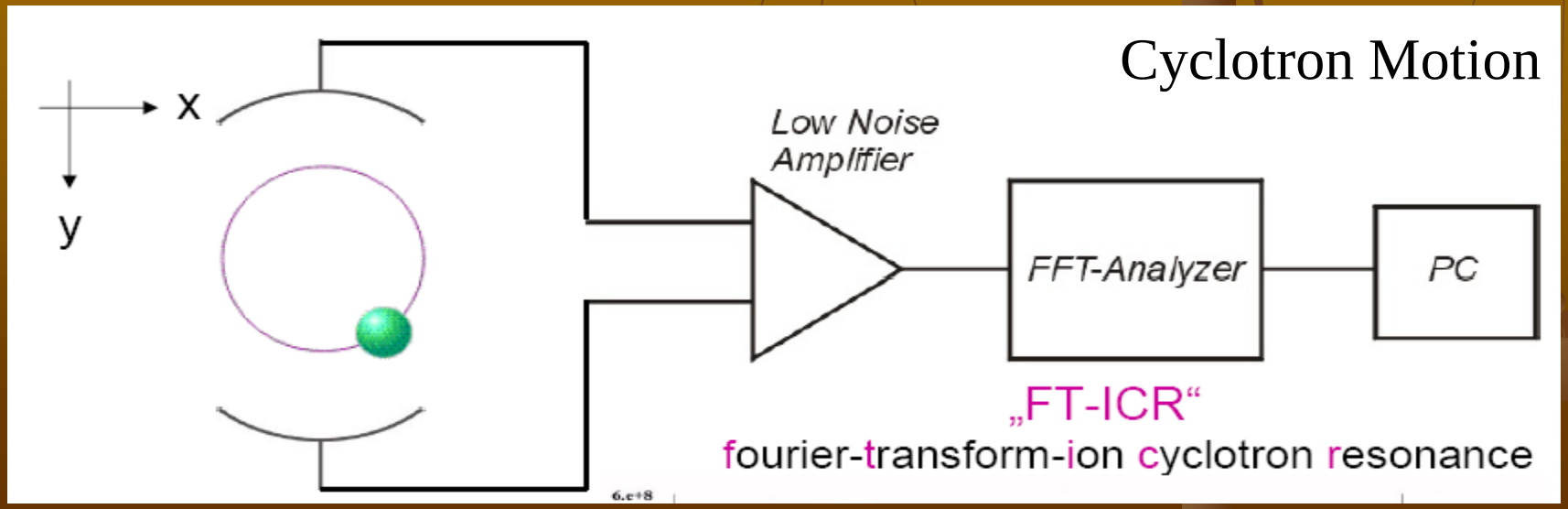

# FTICR DETECTION TECHNIQUE

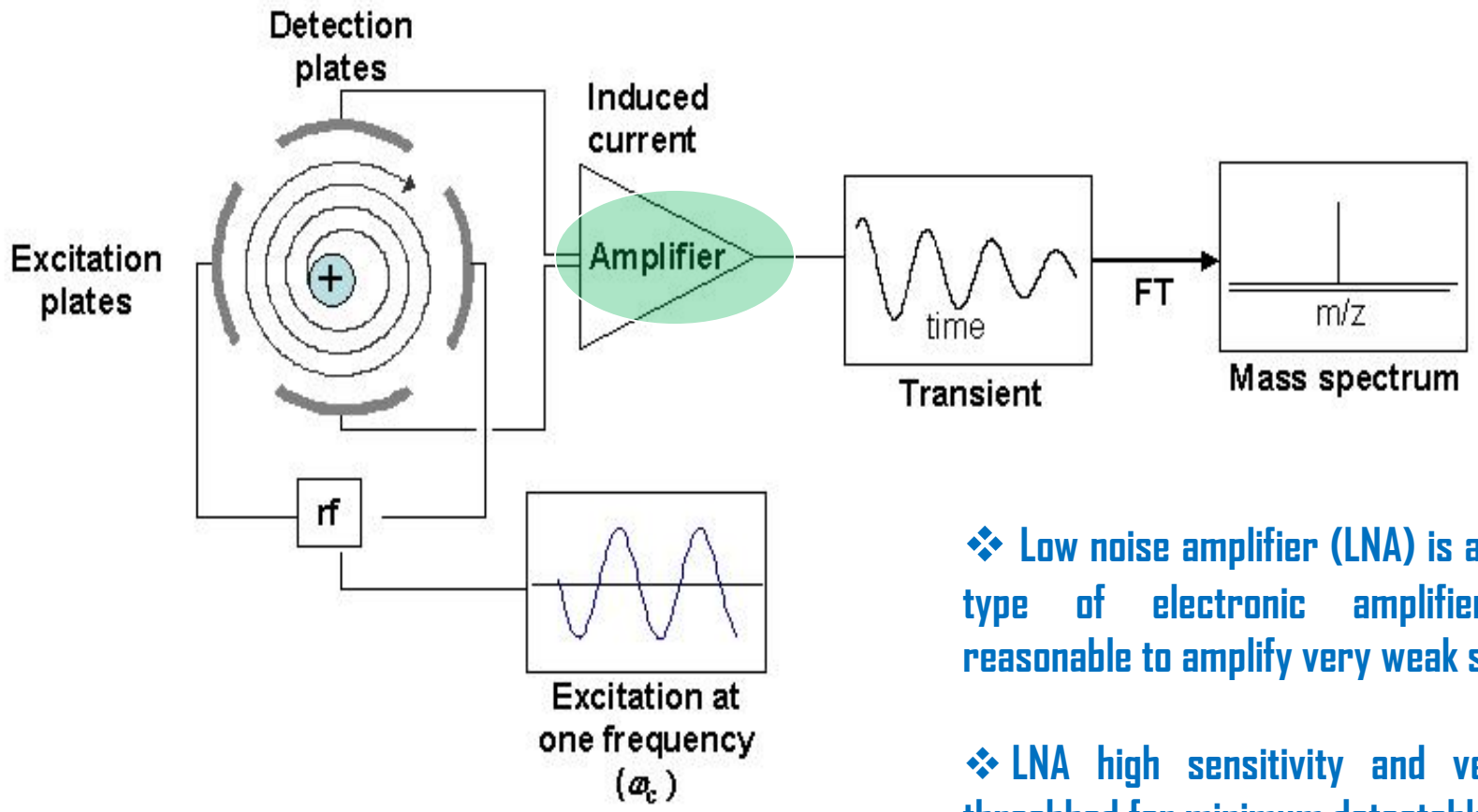


- Low noise amplifier (LNA) is a special type of electronic amplifier with reasonable to amplify very weak signals

- LNA high sensitivity and very low threshhod for minimum detectable signal

# Low Noise Amplifier with high input resistance

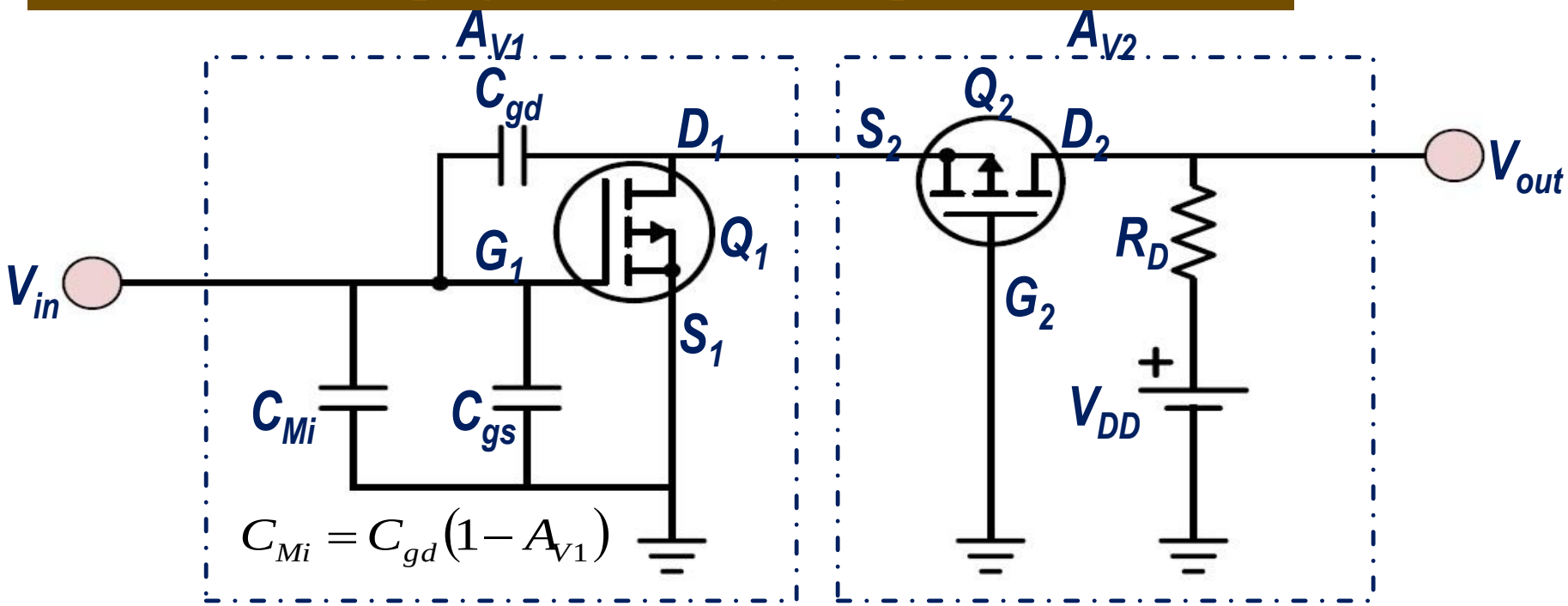


**Cascode** → **Common Source** + **Common Gate**

- ❑ Inverting Amplifier
- ❑ Miller effect increases input capacitance

- ❑ Non-inverting Amplifier
- ❑ Low input impedance

$A_{V1}$ decreases which reduces miller input capacitance ($C_{Mi}$)

$$f_H = \frac{1}{2\pi R(C_{gs} + C_{Mi})}$$

- ❑ Better isolation between input and output
- ❑ Better frequency response
- ❑ Higher voltage gain

# Voltage gain and noise for a cascode amplifier

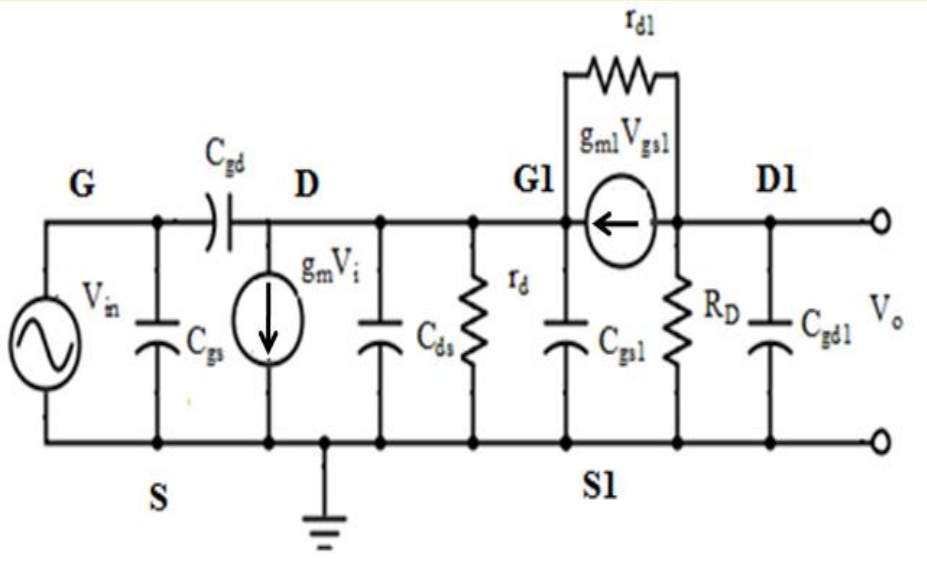


*High Frequency Model of Cascode Amplifier*

## Voltage gain

$$A_V = -\frac{g_m\left(g_{m1}+\frac{1}{r_{d1}}\right)r_{d1}R_D}{r_{d1}\left(g_{m1}+\frac{1}{r_{d1}}+\frac{1}{r_d}\right)+\frac{R_D}{r_d}}$$

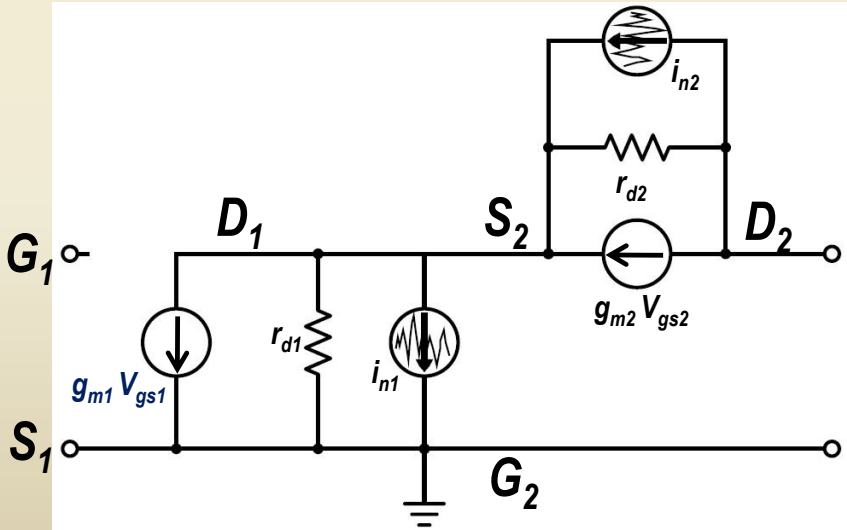


*Thermal Noise Model of Cascode Amplifier*

## Input voltage noise density

$$v_n^2 = \frac{4kT\gamma}{g_{m1}}\left[1+\left(\frac{g_{m2}}{g_{m1}}\right)\left(\frac{r_{d2}}{r_{d1}}\right)^2\frac{1}{\left(g_{m2}r_{d2}+1\right)^2}\right]$$

# *Cascode LNA Simulation*

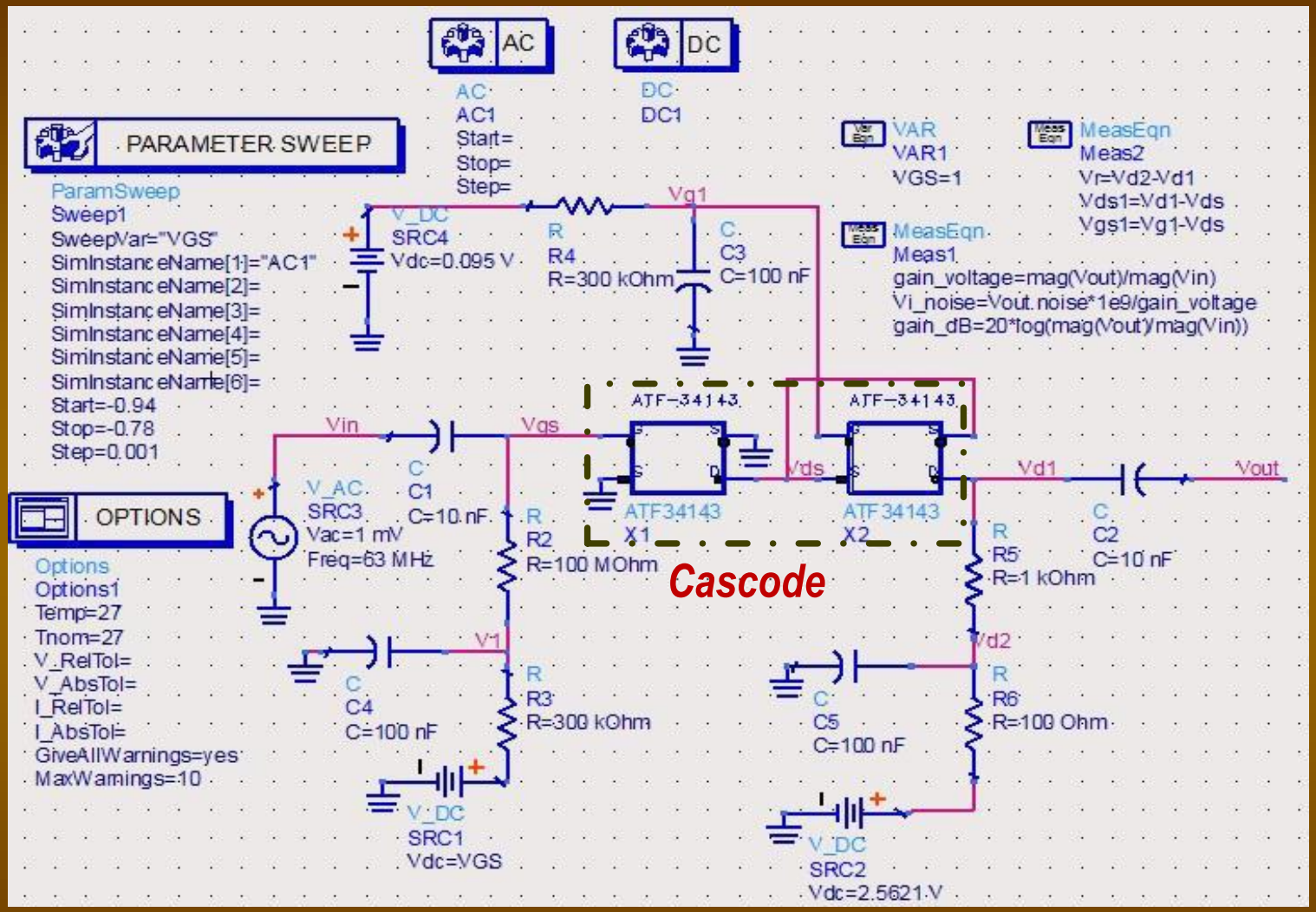


***Advanced Design System (ADS)***

**:An electronic design automation software produced by Agilent**

# Simulation of voltage gain and input voltage noise with different drain current

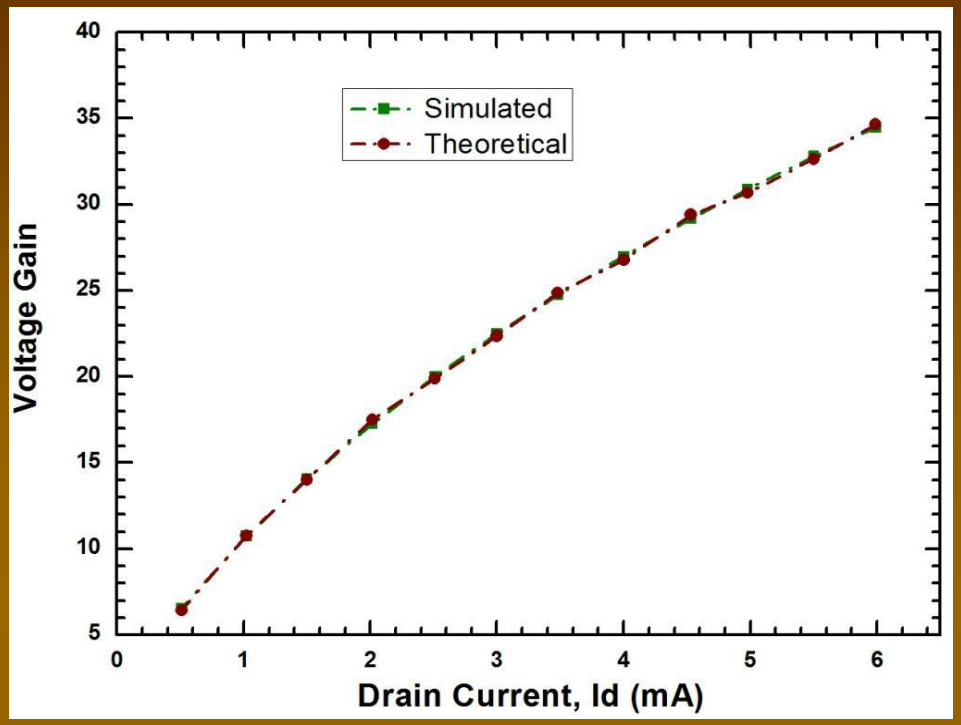


Voltage gain Vs drain current

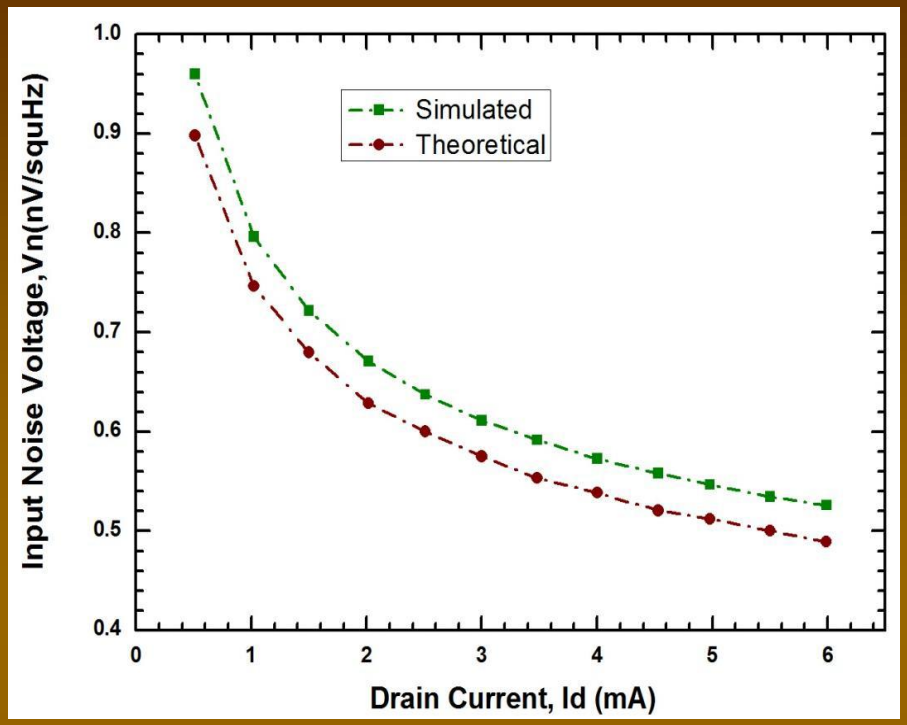


Input voltage noise density Vs drain current for cascode amplifier

- The simulated voltage gain is very close to the theoretical value.
- The input voltage noise density simulated in ADS is slightly higher than the theoretical value of channel thermal noise

## *Device selection*

- **VECC Penning trap is a cryogenic facility which will operate at 4K. So, GaAs devices has been chosen considering its low noise characteristics and its ability to operate at very low temperature.**

***Common source stage*** → ***Avago GaAs FET (ATF-34143)***

- **Very low noise figure ~ 0.5 dB**
- **Gain ~ 17.5 dB**
- **Typical transconductance ~ 230 mS**
- **Very low input capacitance ~ 0.8 pF**
- **Very low gate-drain feedback capacitance ~ 0.16 pF**

***Common gate stage*** → ***Toshiba GaAs FET (3SK-240)***

- **Low noise figure ~ 1 dB**
- **Gain ~ 20.5 dB**
- **Transconductance ~ 19 mS**
- **Very low input capacitance ~ 0.6 pF**
- **Very low gate-drain feedback capacitance ~ 0.013 pF**

***Impedance matching stage*** → ***Avago GaAs FET (ATF-34143)***

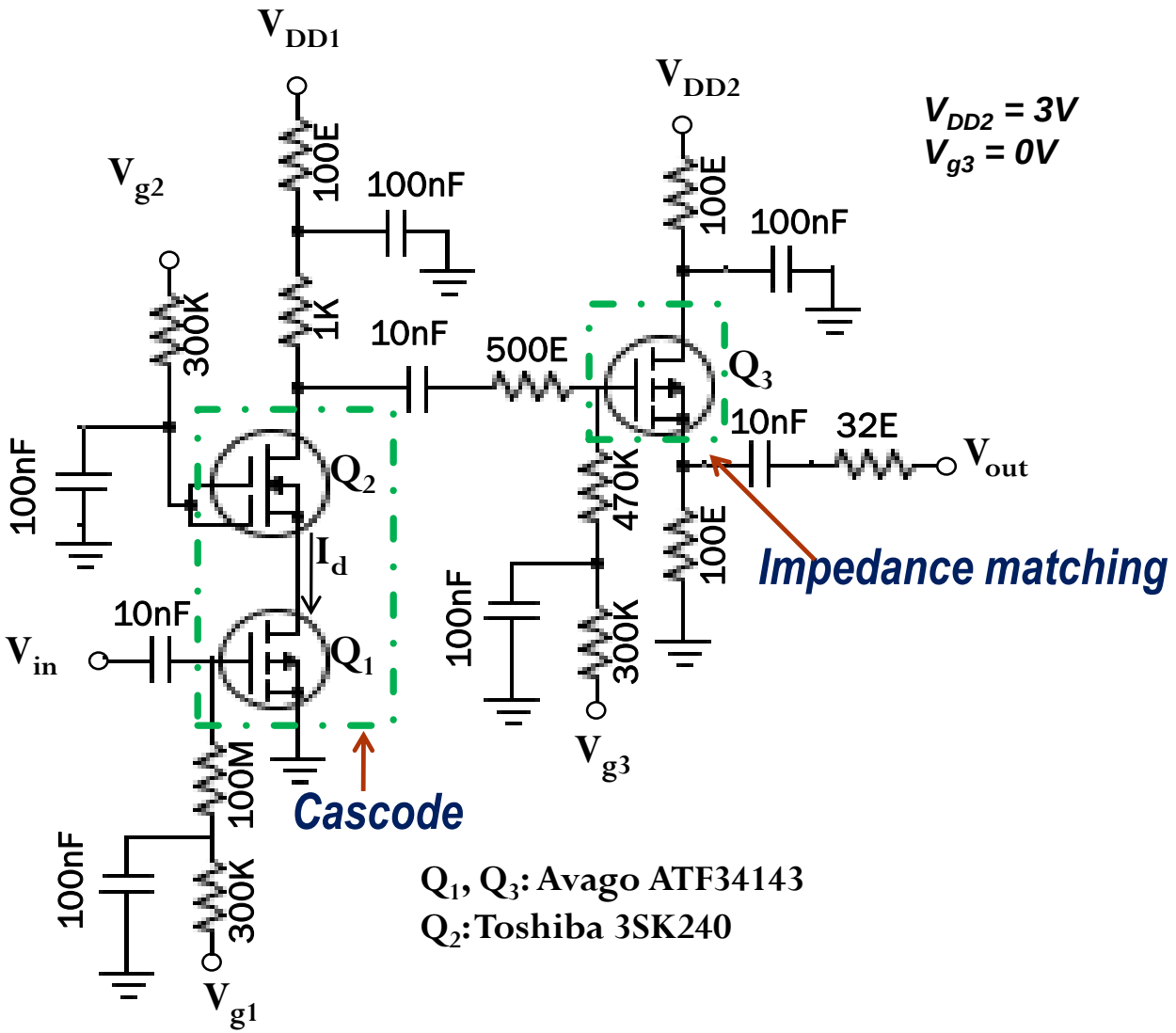


*Schematic of the Cascode LNA*

# LNA CIRCUIT FABRICATED

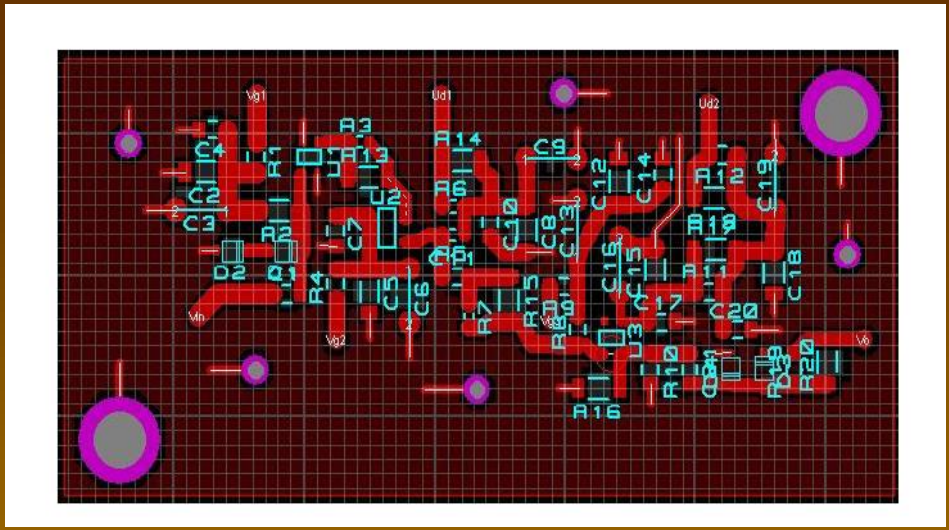

*LNA circuit layout built on ARES*

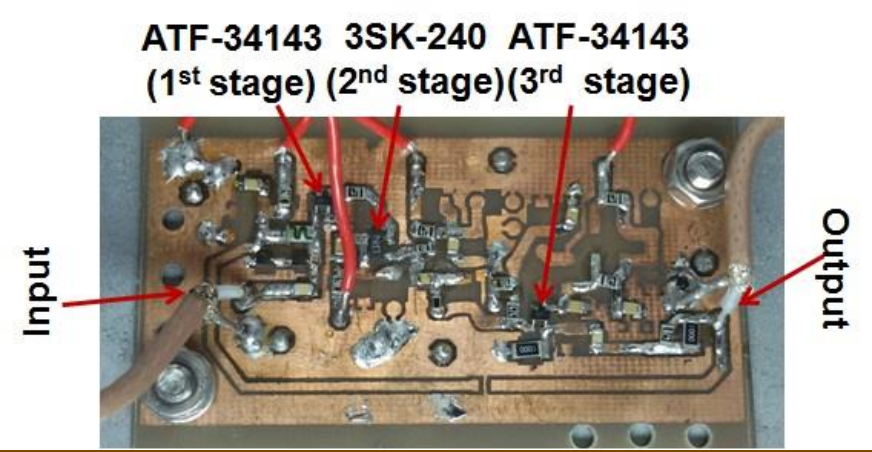


*LNA circuit fabricated on FR4 PCB*

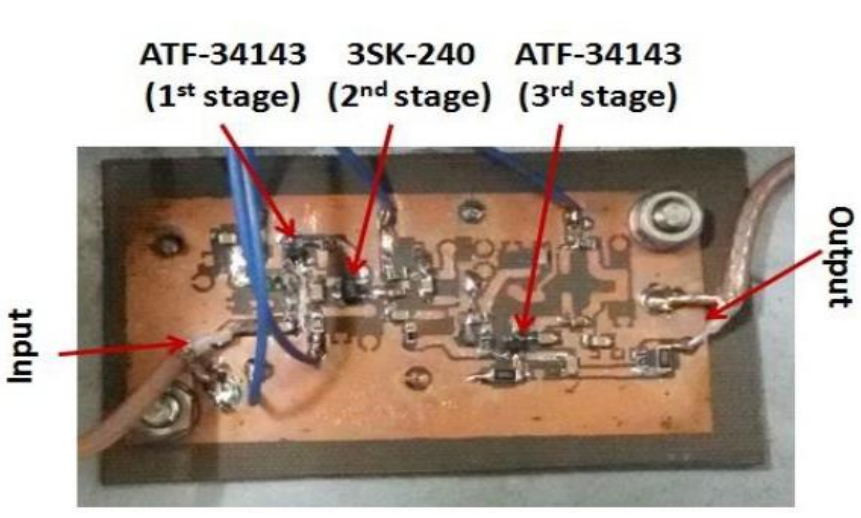


*LNA circuit fabricated on Teflon PCB*

# *Voltage Gain of LNA*

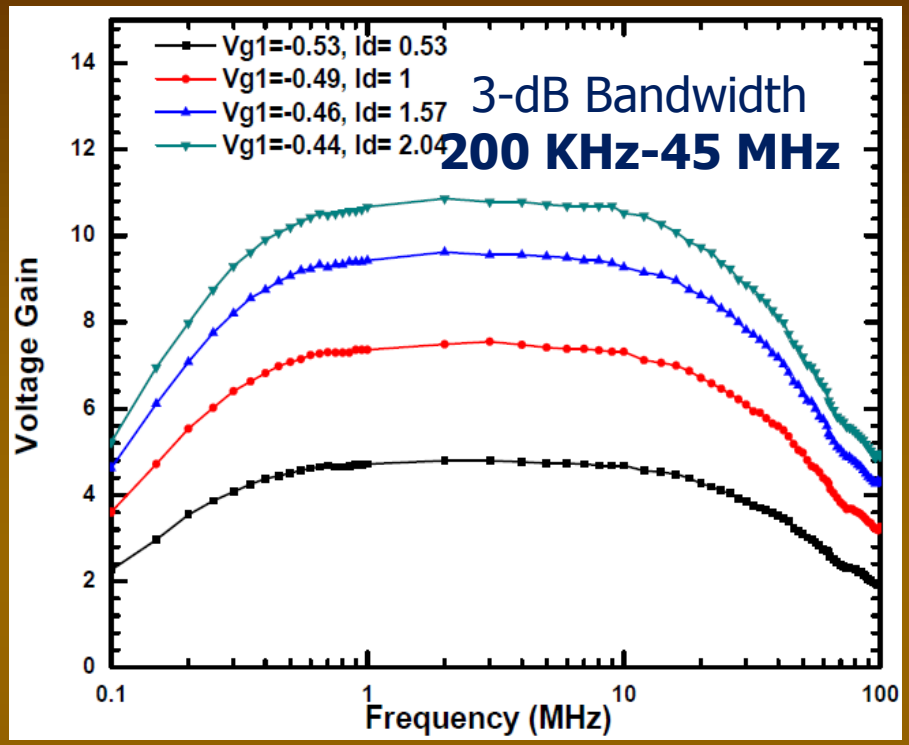


*Frequency response with FR4 substrate*

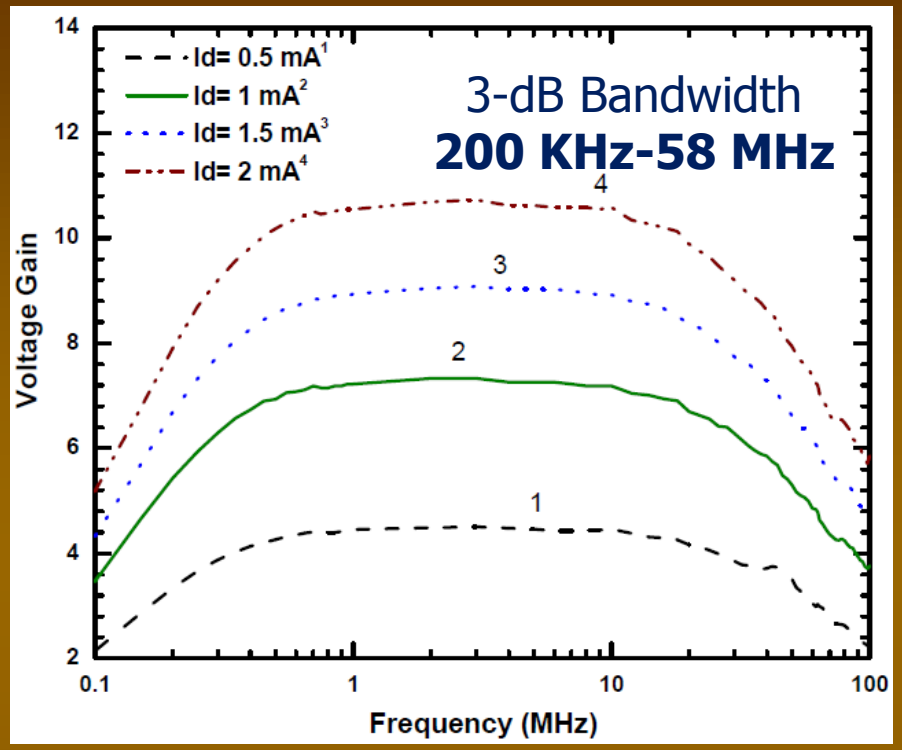


*Frequency response with Teflon substrate*

- **The higher cut-off frequency with teflon substrate is ≈ 58 MHz compared to FR4 substrate where higher cut-off frequency is ≈ 45 MHz**

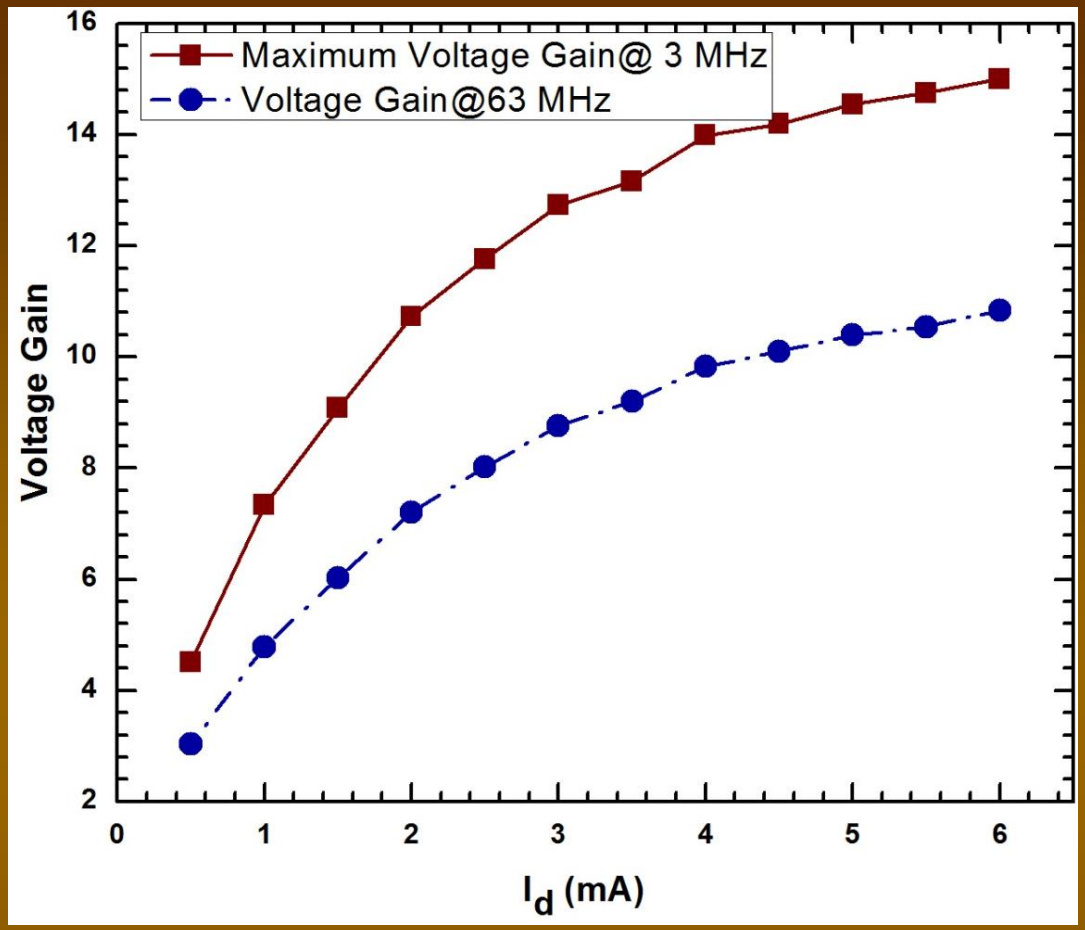


*Voltage gain vs drain current*

- **Voltage gain of the LNA decreases at 63 MHz due to roll-off of voltage gain at higher frequency**

## *Noise Measurement*

**One can measure the noise performance of a low noise amplifier using a spectrum analyzer/network analyzer or noise figure meter**

**Above noise measurement devices are very costly and not easily available so we have tried an alternate method of noise measurement**

## NOISE MEASUREMENT USING DAQ (NI-PCI 4472)

- **Here, we have integrated a low frequency data acquisition card (DAQ) using Labview 8.5 to measure the input voltage noise density of an amplifier.**

- **This DAQ card can acquire an input signal from DC - 49.8 KHz. So we need to downconvert the actual signal to the frequency range acceptable DAQ card to measure the noise of amplifier at high frequency**

## *Noise measurement Scheme*

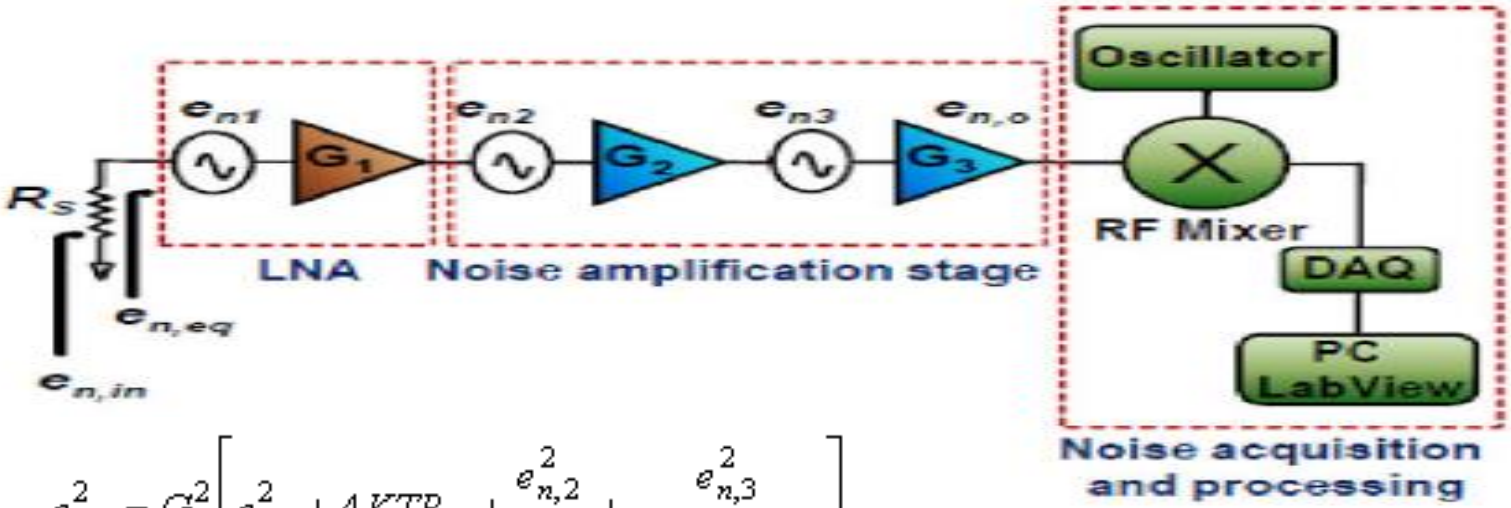


$$e_{n,o}^2 = G^2\left[e_{n,1}^2 + 4KTR_S + \frac{e_{n,2}^2}{G_1^2} + \frac{e_{n,3}^2}{\left(G_1^2 \cdot G_2^2\right)^2}\right]$$

$$V_{n,eq} = \sqrt{V_{n,in}^2 - 4KTR_S} = \sqrt{\left(\frac{V_{n,0}}{G}\right)^2 - 4KTR_S}$$

$$V_{n,eq} = \sqrt{V_{n,1}^2 + \frac{1}{G1^2}V_{n,2}^2 + \frac{1}{(G1.G2)^2}V_{n,3}^2}$$

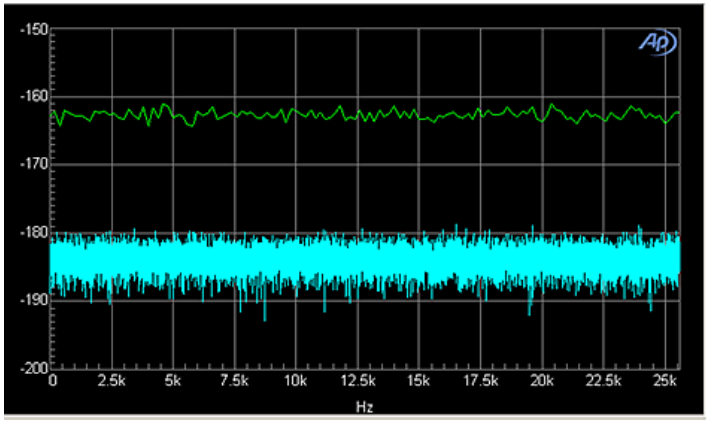


- **If the 2nd and 3rd stage amplifier has a low noise characteristics then the $V_{n,eq}$ will be close to the input voltage noise density $V_{n1}$ of the LNA.**

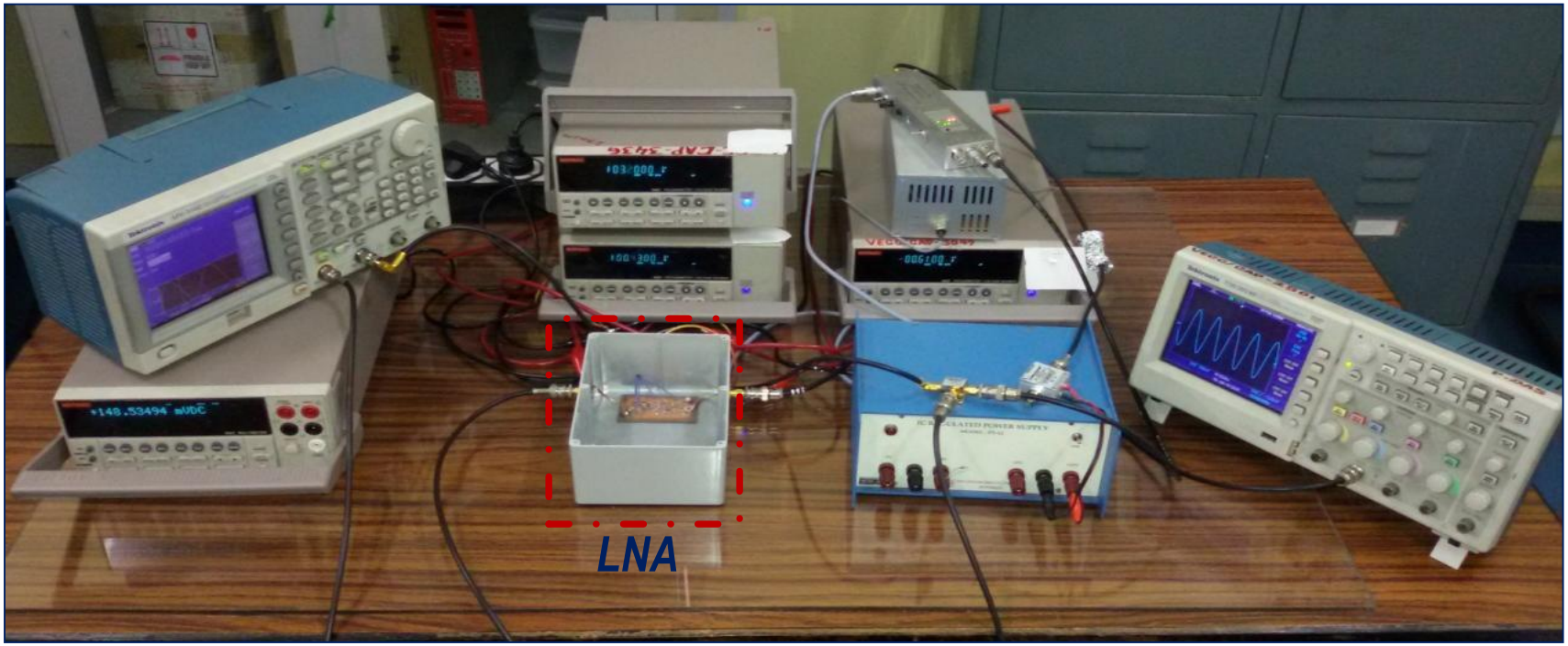


*Experimental setup for amplifier testing*

*Comparison of noise measurement of ZFL-500LN using spectrum analyzer and DAQ card*

*Noise performance of LNA under different operating condition*

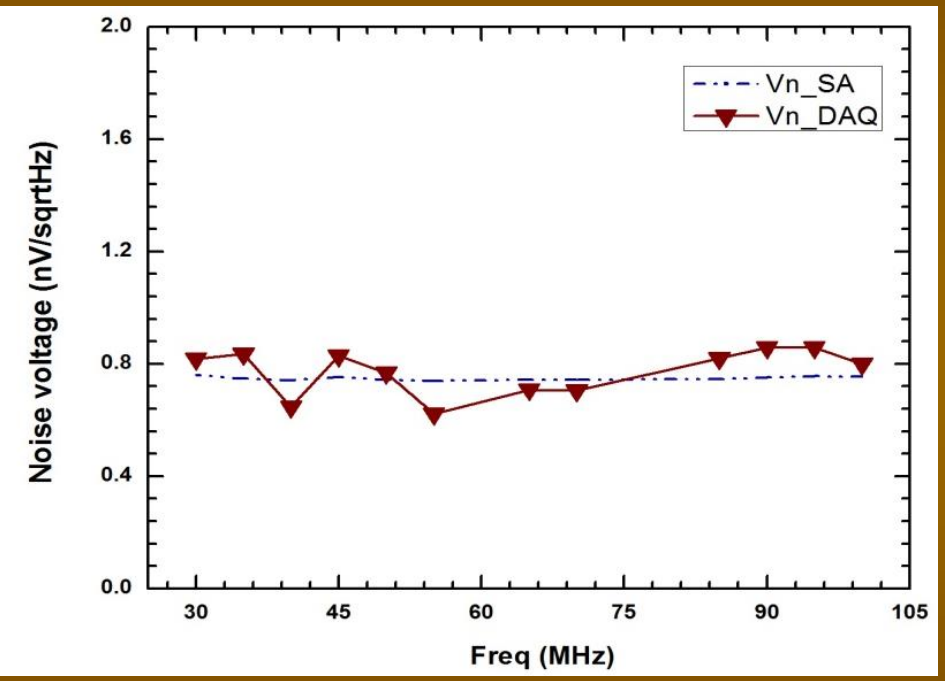


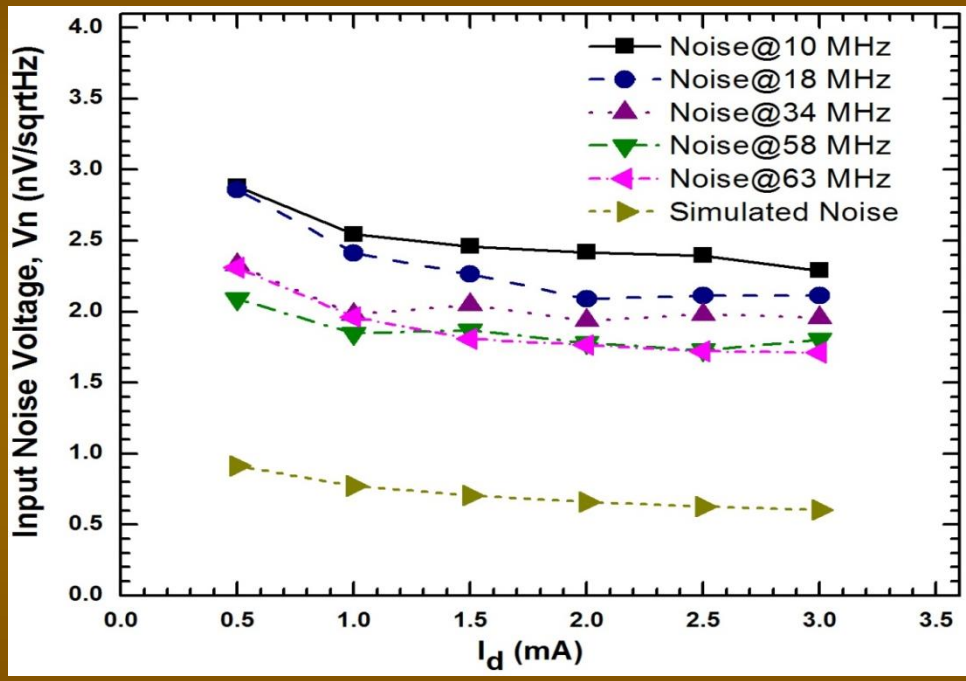


*Input noise voltage vs drain current with teflon substrate*

**The input voltage noise density at 63 MHz with FR4 substrate was found to be ≈ 2.7 nV/√Hz with a drain current of 1 mA while it improves to ≈ 1.8 nV/√Hz with teflon substrate.**

# LNA SPECIFICATIONS

- **Low input voltage noise density (1.8 nV/√Hz)**
- **High input resistance (~ MΩ)**
- **Low power consumption**
- **Minimum parasitic feedback**
- **Operating frequency range: 60 MHz – 70 MHz**

# VEC TRAP

## (A cryogenic Penning Trap facility)

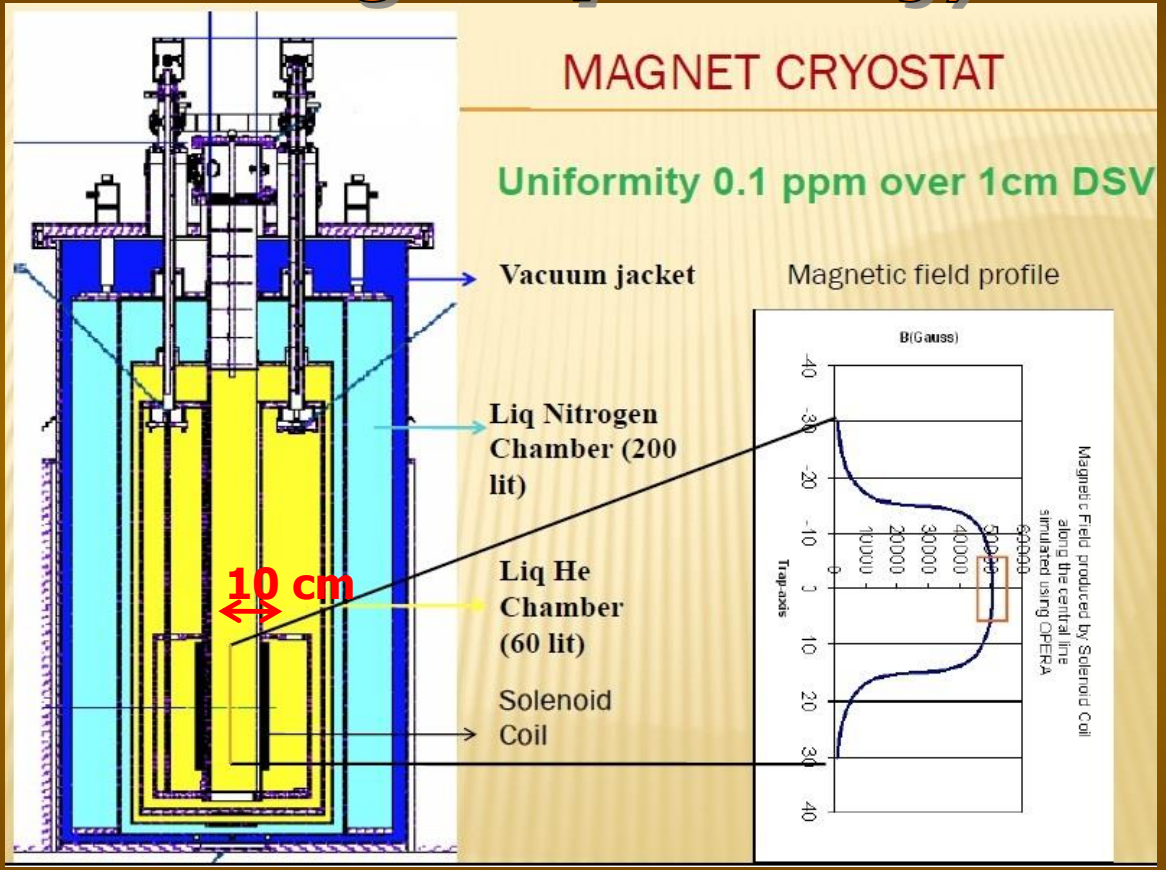


*5 Tesla superconducting persistent mode magnet cryostat for Penning ion trap*
*Temporal stability ~1ppb/hr, A magnetic shielding circuit provides flux stabilization*

**MAGNET COMMISSIONED**

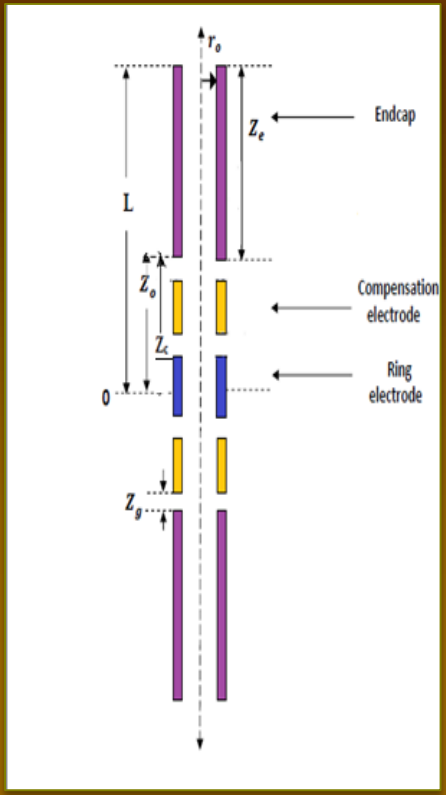


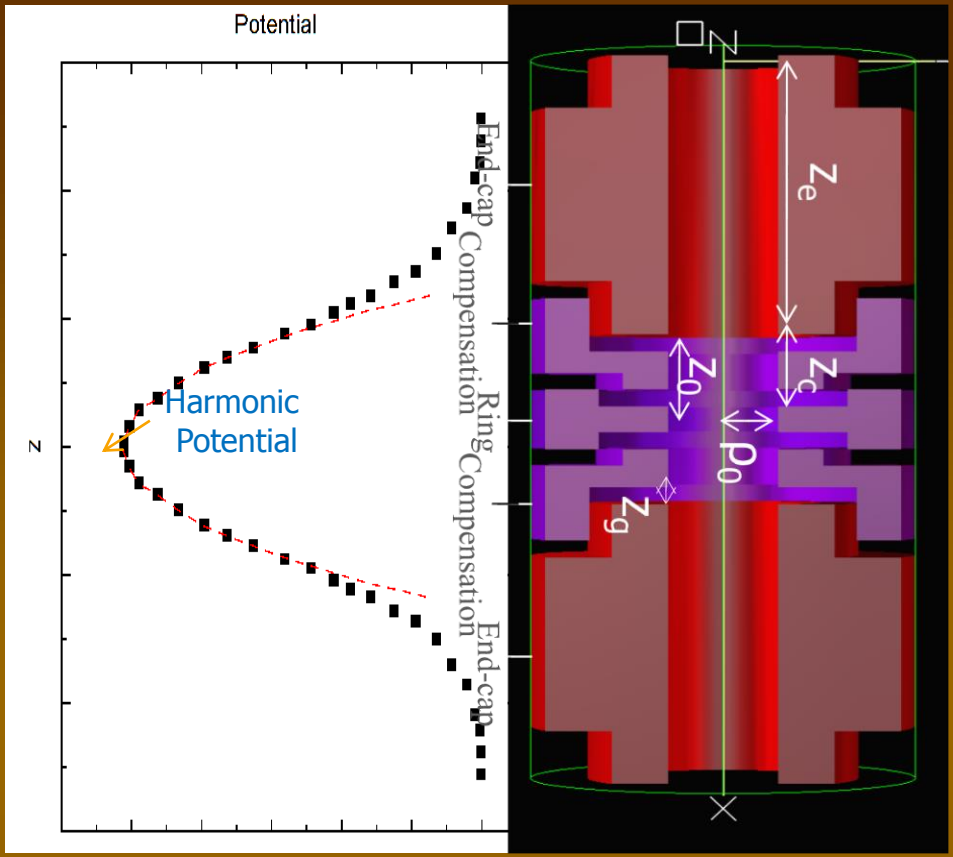


$$r_o = 3.29mm$$
$$Z_o = 3.04mm$$
$$Z_C = 2.58mm$$
$$Z_g = 0.6mm$$
$$d = 2.707mm$$

The most general solution to Laplace equation

$$V(r,\theta) = \frac{1}{2}V_0 \sum_{\substack{k=0 \\ \text{even}}}^{\infty} C_k \left(\frac{r}{d}\right)^k P_k(\cos\theta).$$

where $d^2 = ((r_0^2/2) + z_0^2))/2$

| Dimensional (mm) | | Potential parameter | |
|---|---|---|---|
| $\rho_0$ | 3.29 | $V_0$ | 10 |
| $Z_0$ | 3.04 | $V_c$ | 4.9874 |
| d | 2.7068 | $C_0$ | 0.57463 |
| $Z_r$ | 0.92 | $C_2$ | 0.65202 |
| $Z_c$ | 1.38 | $C_4$ | 1.17E-4 |
| $Z_e$ | 10.00 | $C_6$ | 0.0668 |
| $Z_g$ | 0.60 | $C_8$ | -0.00934 |

# TRAP ELECTRODES FABRICATED AT VECC WORKSHOP within 40 micron tolerance

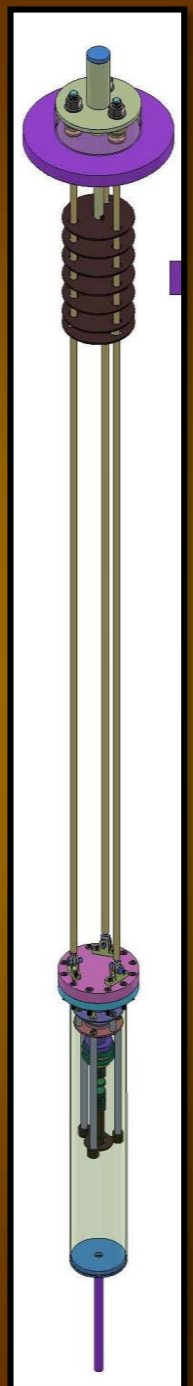

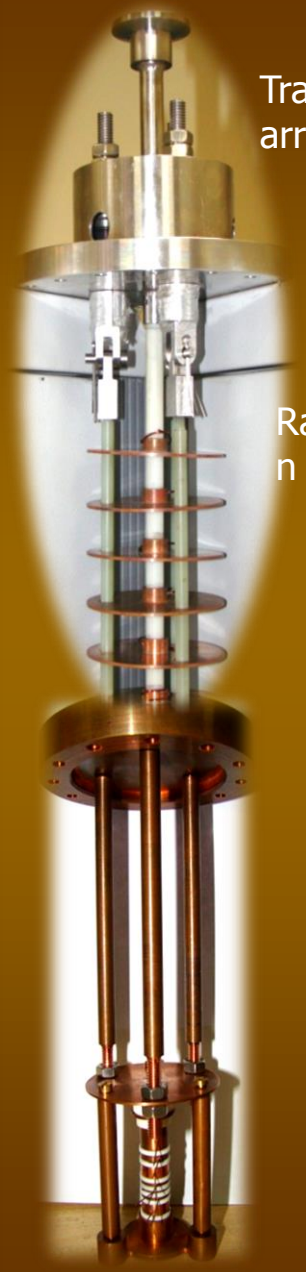

Trap positioning arrangement

Radiatio
n baffle

OFHC PIN Laser Welded at RRCAT for connection

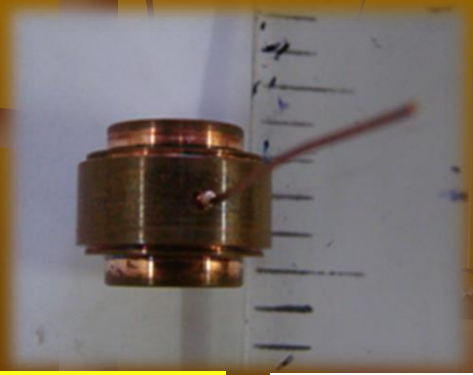

*Axial frequency*,

$$f_Z = \frac{1}{2\pi}\sqrt{\frac{qU_{dc}}{md^2}C_2} =$$

**63 MHz**

$U_{dc} = 10V$

$C_2 = 0.65202$

# Resonant instead of broadband detection

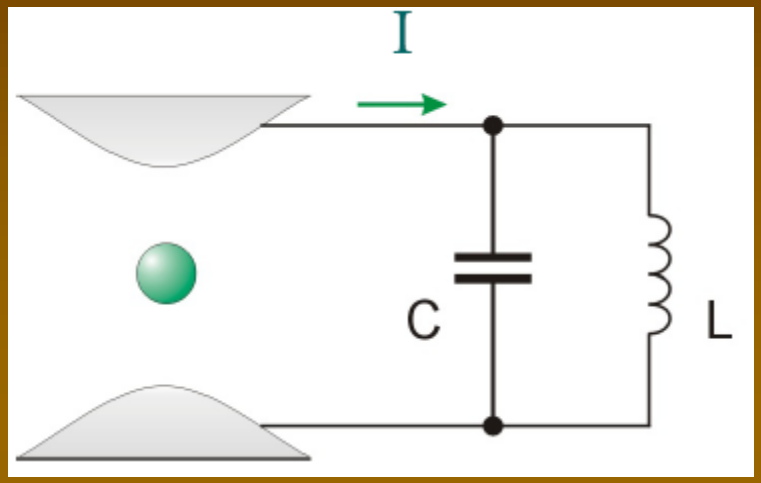


measured signal:

$$U = Z \cdot I$$

$$Z_{LC} = Q_{LC} \cdot |Z_{C,parasitic}|$$

$$\omega_{ion} = \omega_{LC} = 1/\sqrt{(LC)}$$

$$\frac{S}{N} = \frac{\sqrt{\pi}}{2} \frac{r_{ion}}{D} q \sqrt{\frac{\nu}{\Delta\nu}} \sqrt{\frac{Q}{kTC}}$$

*enhancement factor*
*~100 (T=300K)*
*~2000 (T = 4K)*

# Signal Detection using resonant technique

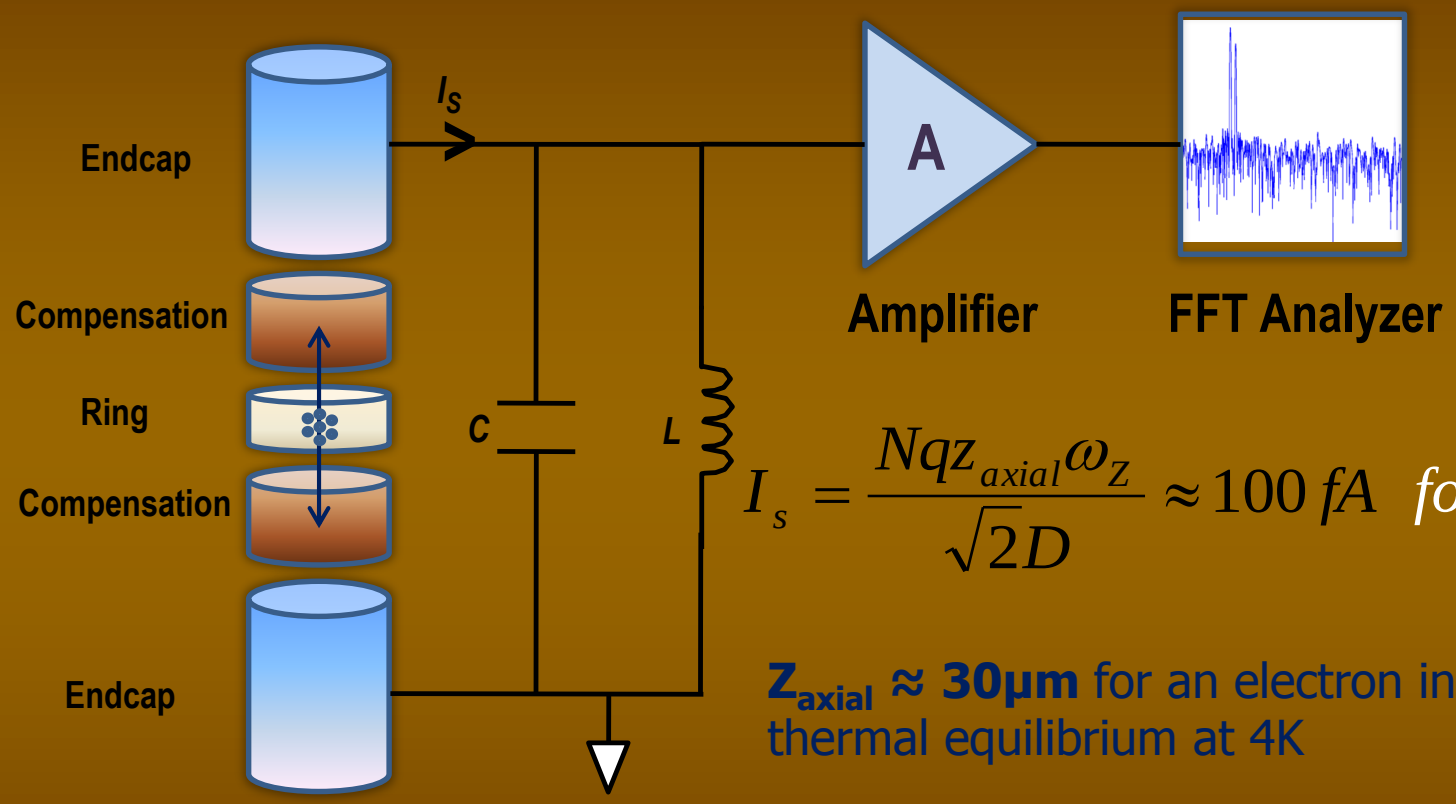


$$I_s = \frac{Nqz_{axial}\omega_Z}{\sqrt{2}D} \approx 100\ fA \quad for\ N = 1$$

**$Z_{axial}$ ≈ 30μm** for an electron in thermal equilibrium at 4K

$$f_Z = \frac{1}{2\pi}\sqrt{\frac{qU_{dc}}{md^2}C_2} = \mathbf{63\ MHz}$$

# COLPITTS OSCILLATOR DESIGN

High frequency Osc
Q1:Commom base
non inverting

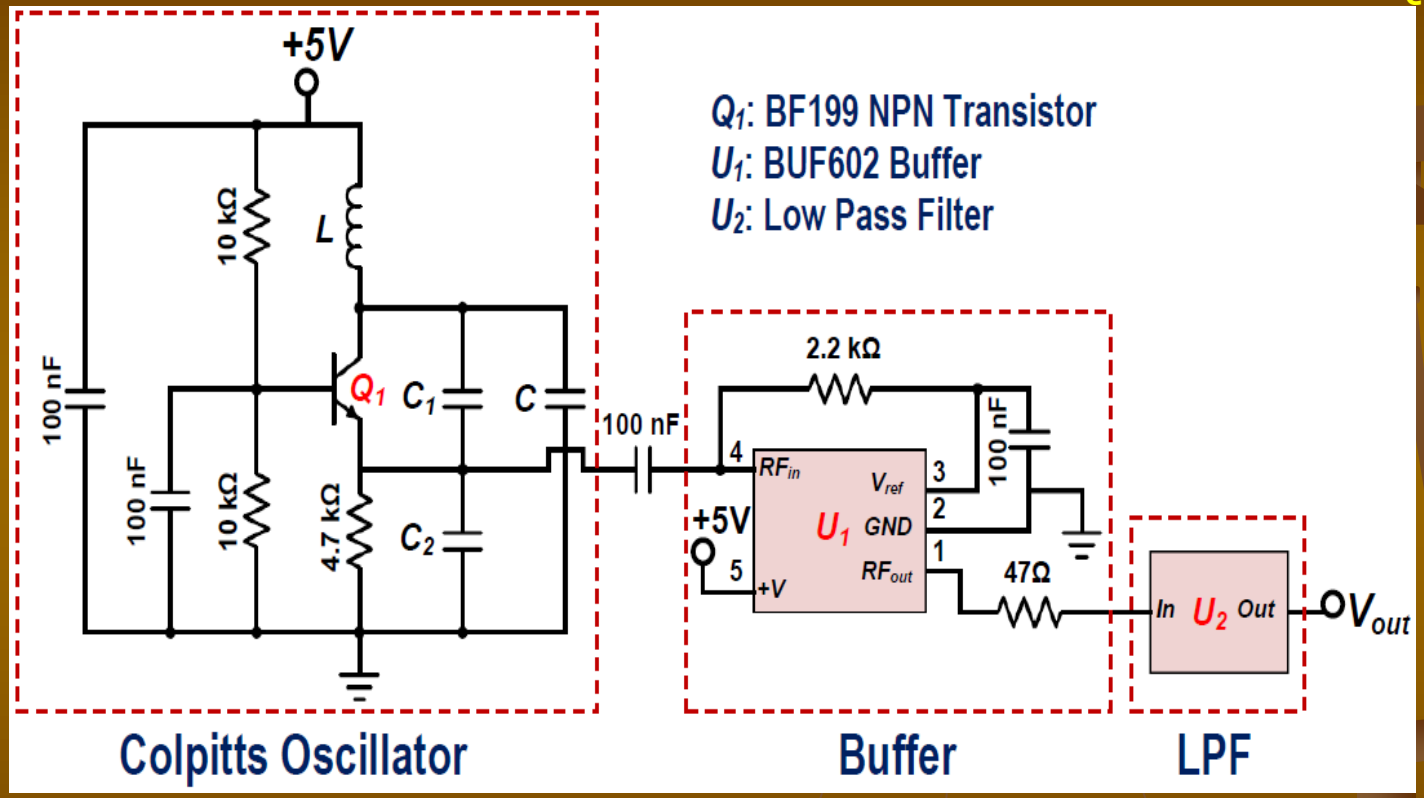


Buffer stage
Impedence
High input
Low output
Improves
Frequency stability

$$f_1 = \frac{1}{2\pi\sqrt{LC_{eq}}},\ f_2 = \frac{1}{2\pi\sqrt{L\left(C_{eq}+C\right)}}$$

$$C_{eq} = \frac{C_1 C_2}{C_1 + C_2}$$

# COLPITTS OSCILATOR CIRCUIT FABRICATED

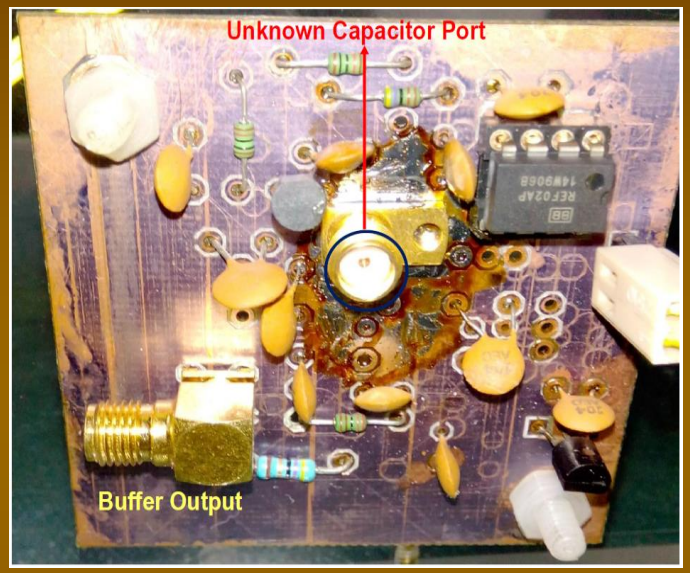


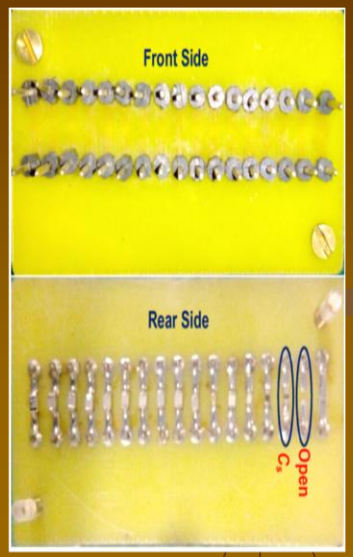


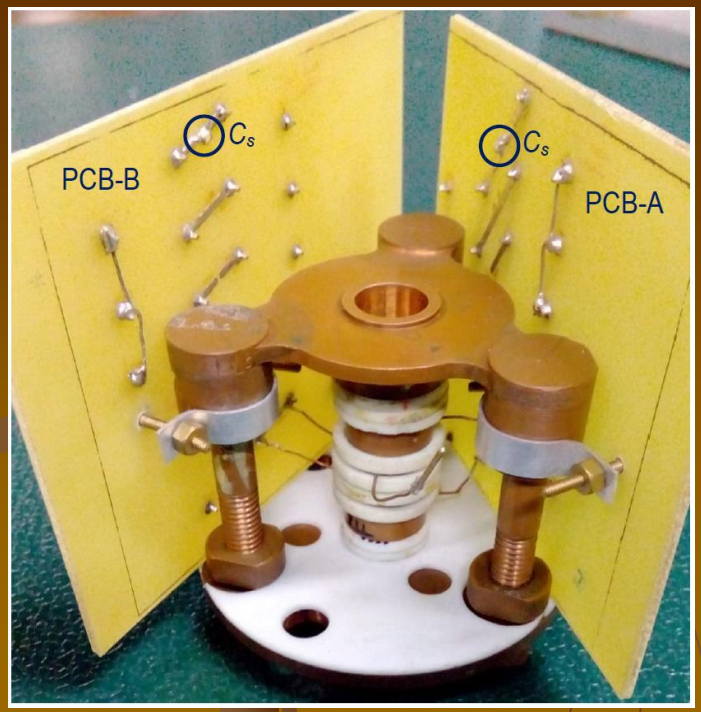


Trap Capacitance Measurement set up

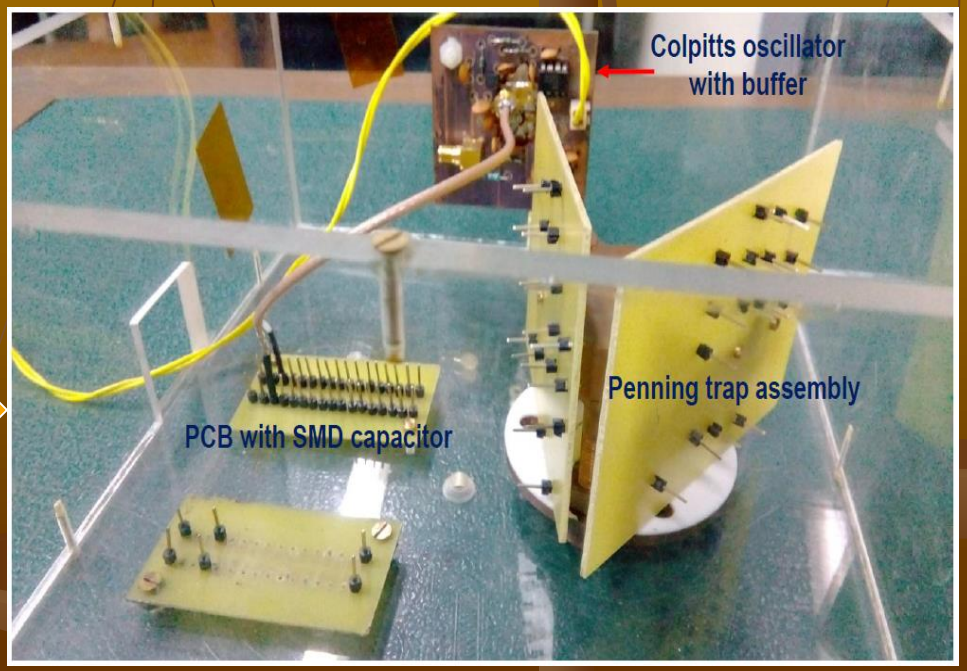

# Colpitts oscillator output Buffer stage

*Output signal with filter*

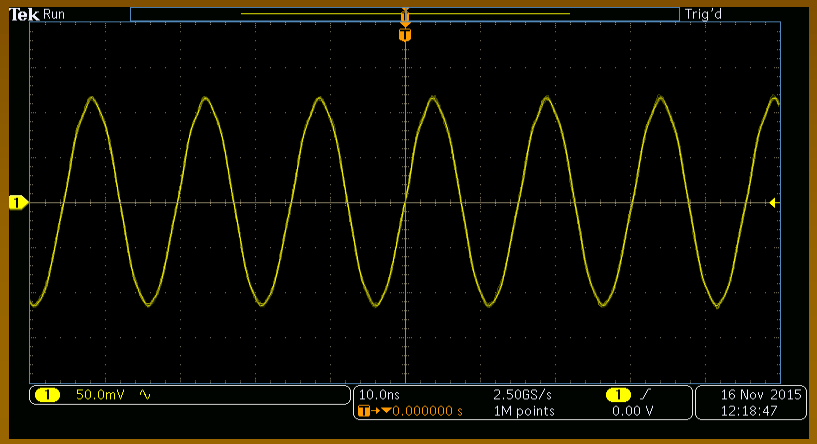


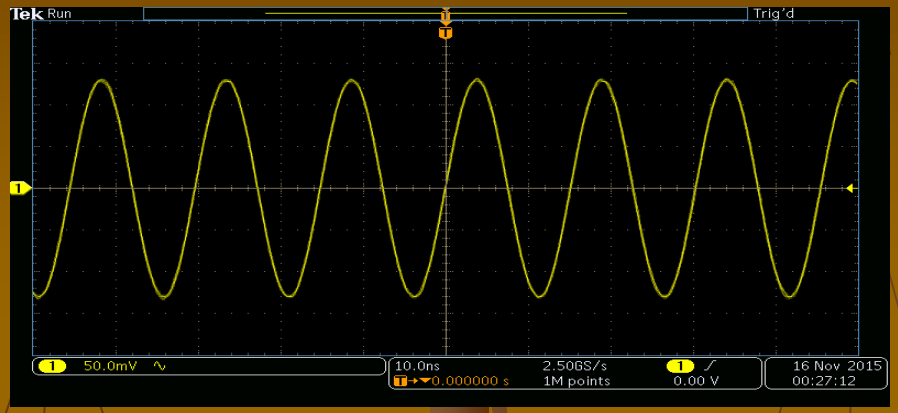


time domain output signal

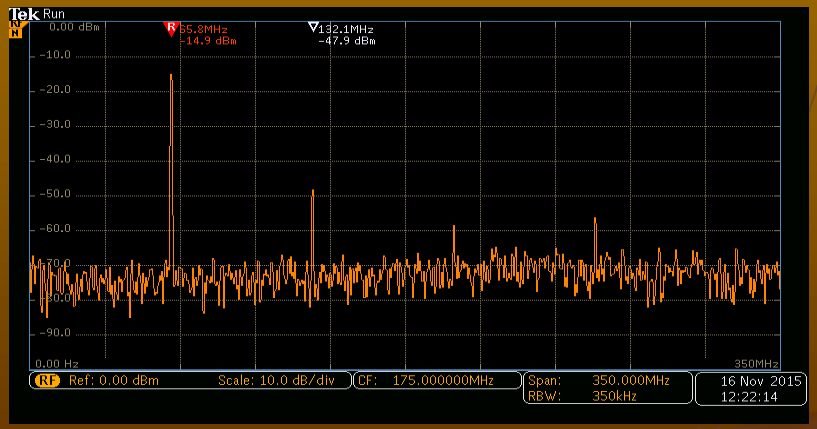


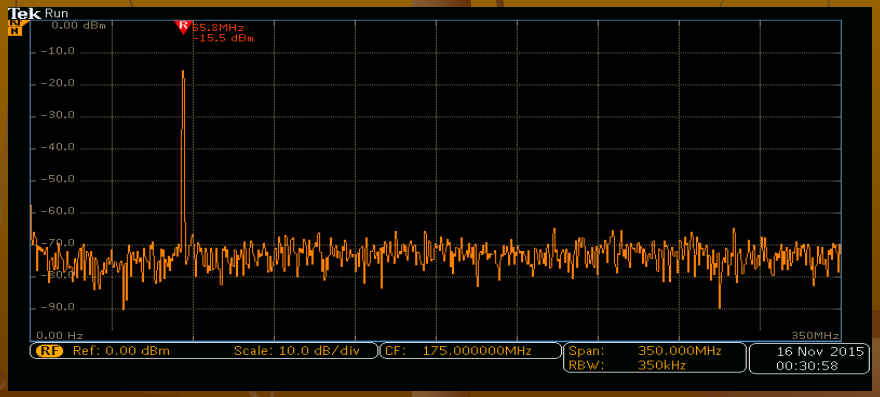


FFT of the output signal

# *Third stage of Colpitts oscillator : Low Pass Filter*

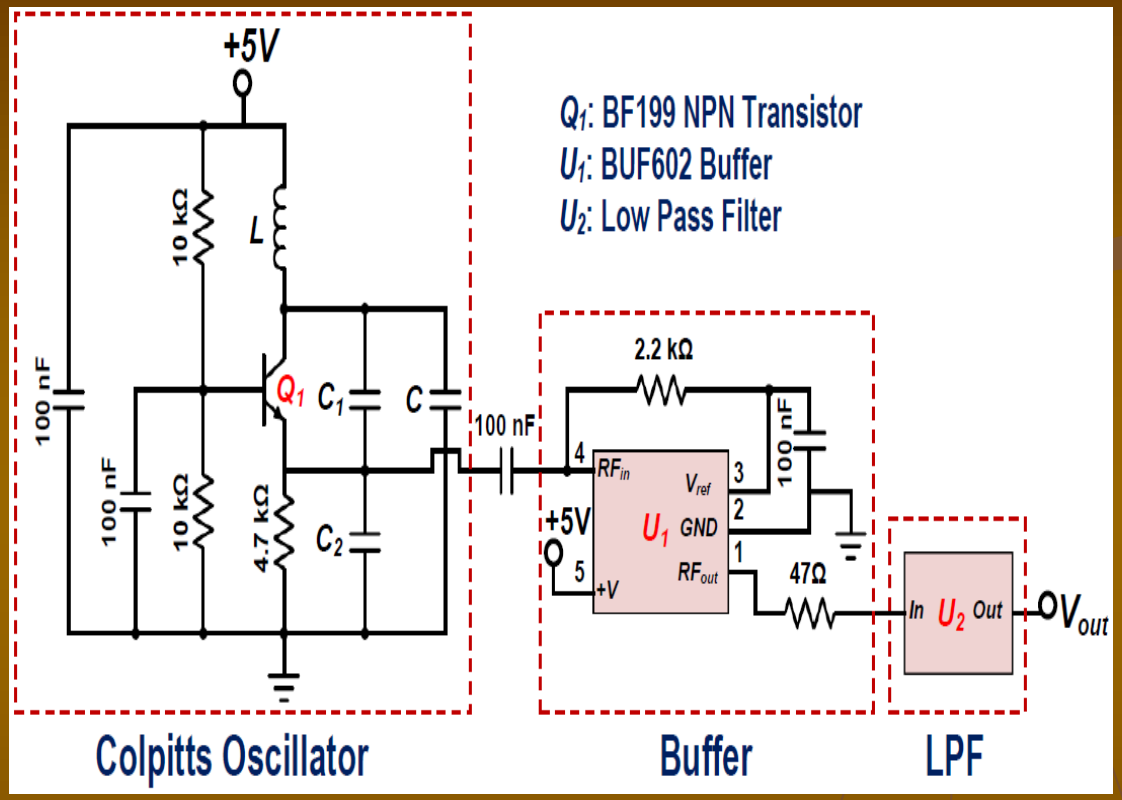


(a) Cut-off frequency ($f_c$): 75 MHz
(b) Minimum stopband attenuation ($L_{AS}$): 30 dB
(c) Minimum stopband attenuation frequency ($f_s$): 126 MHz

**7th order filter**

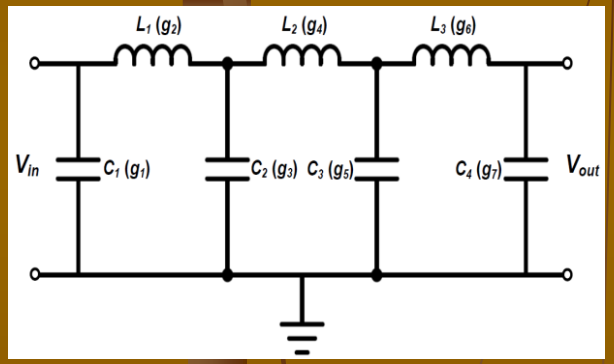


**A Butterworth low pass filter**
FR4 PCB

# Capacitance measurement scheme

$$f_o = \frac{1}{2\pi\sqrt{L_{eff} C_{eff}}}$$

$$f_s = \frac{1}{2\pi\sqrt{L_{eff}(C_{eff} + C_s)}}$$

$$C_u = C_{eff}\left[\left(\frac{f_o}{f_u}\right)^2 - 1\right]$$

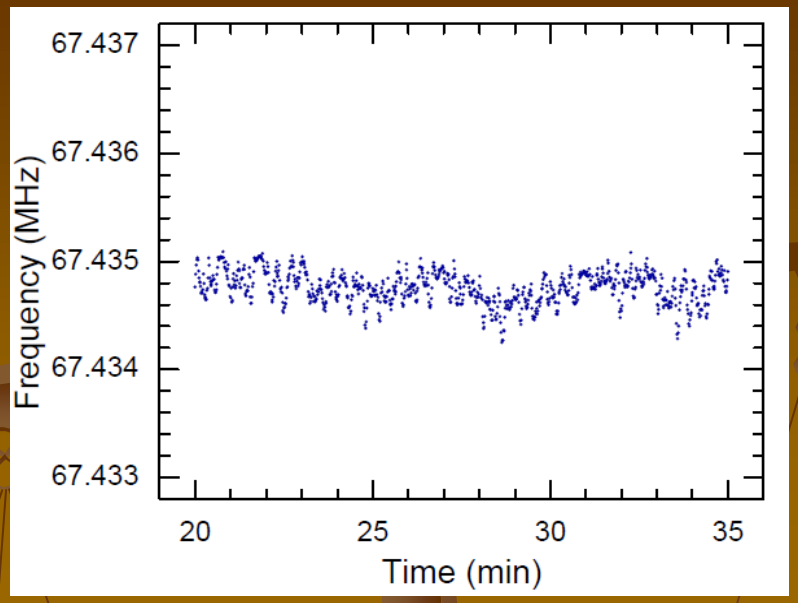


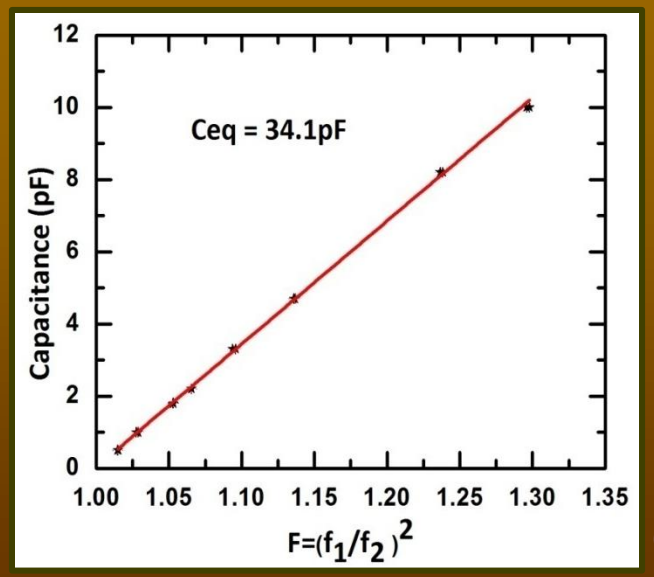


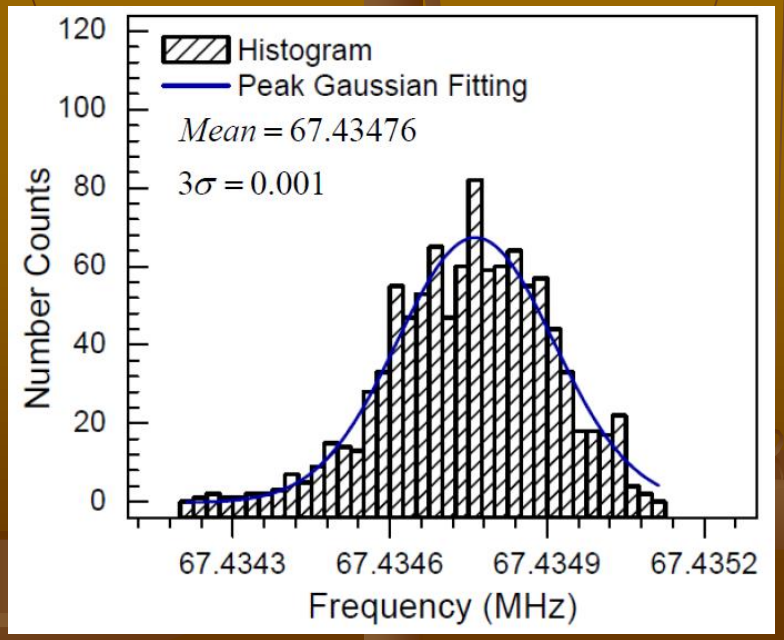

# Capacitance measurement using Resonant technique

| Capacitors (pF) | Measured (pF) (Helical Resonator) | Measured (pF) (Colpitts Oscillator) |
|---|---|---|
| 0.5 | 0.494 | 0.474 |
| 1.0 | 1.018 | 0.96 |
| 3.3 | 3.28 | 3.39 |
| Trap (UE-LE) | 2.23 | 2.15 |
| Trap (UC-R) | 4 | 4 |

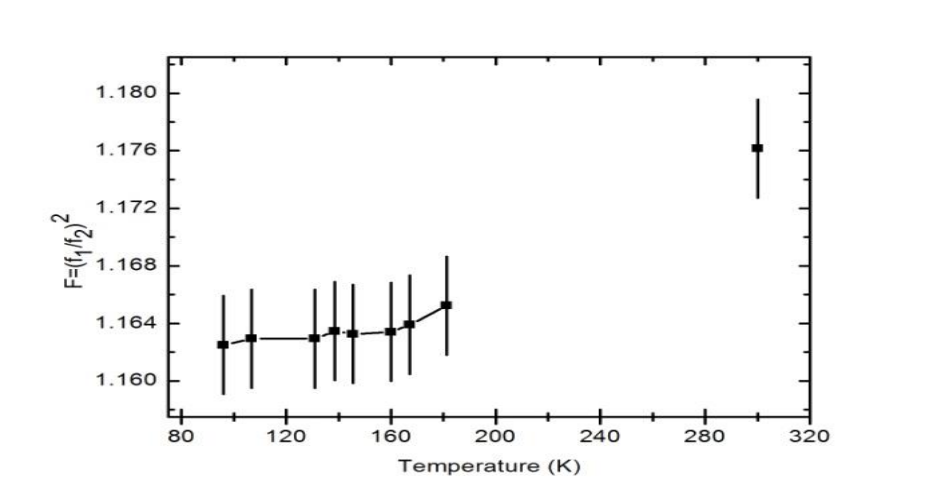


# *Design of a Helical Resonator with capacitive loading*

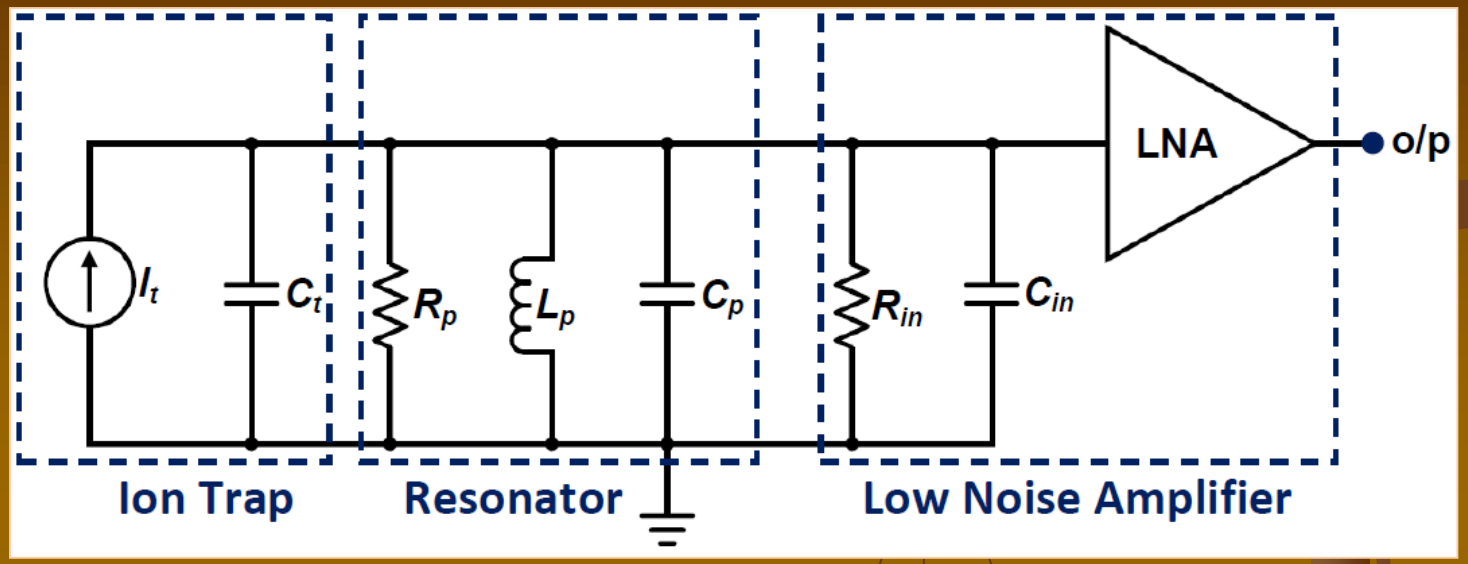


- **Capacitive loading contributed from trap, LNA and connecting wire is roughly estimated to be of the order of 12 to 15 pF.**
- **The resonator should be designed in such a way that it will resonate at a frequency range of (60-70) MHz after a capacitive loading of 15pF.**

# *Design parameter of 160 MHz helical resonator*

| $f_o$ (MHz) | $C_e$ (pF) | $C_l$ (pF) | $f_l$ (MHz) |
|---|---|---|---|
| 100 | 2.822 | 15 | 39.8 |
| 120 | 2.897 | 15 | 48.3 |
| 140 | 2.961 | 15 | 56.8 |
| **160** | **3.042** | **15** | **65.7** |
| 180 | 3.140 | 15 | 74.9 |

| Design parameters | Values |
|---|---|
| Design frequency | 160 MHz |
| Outer shield diameter | 50 mm |
| Helix core diameter | 27.52 mm |
| Helix length | 41.28 mm |
| Outer shield height | 66.3 mm |
| Number of turns | 6 |
| Helix wire diameter | 3 mm |

**Helical resonator is designed for 160 MHz, we can expect a loaded resonant frequency within (60-70) MHz with a capacitive loading of 15 pF.**

***High Frequency Structure Simulation (HFSS)***

**Fabricated helical resonator**
**$f_o$ = 155.11 MHz, $Q_o$ = 1231**

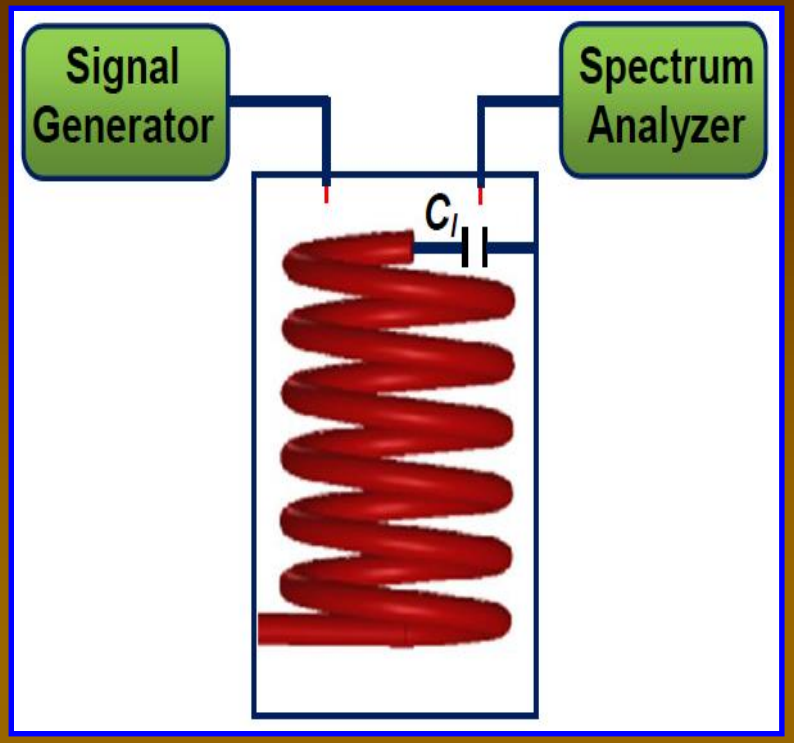


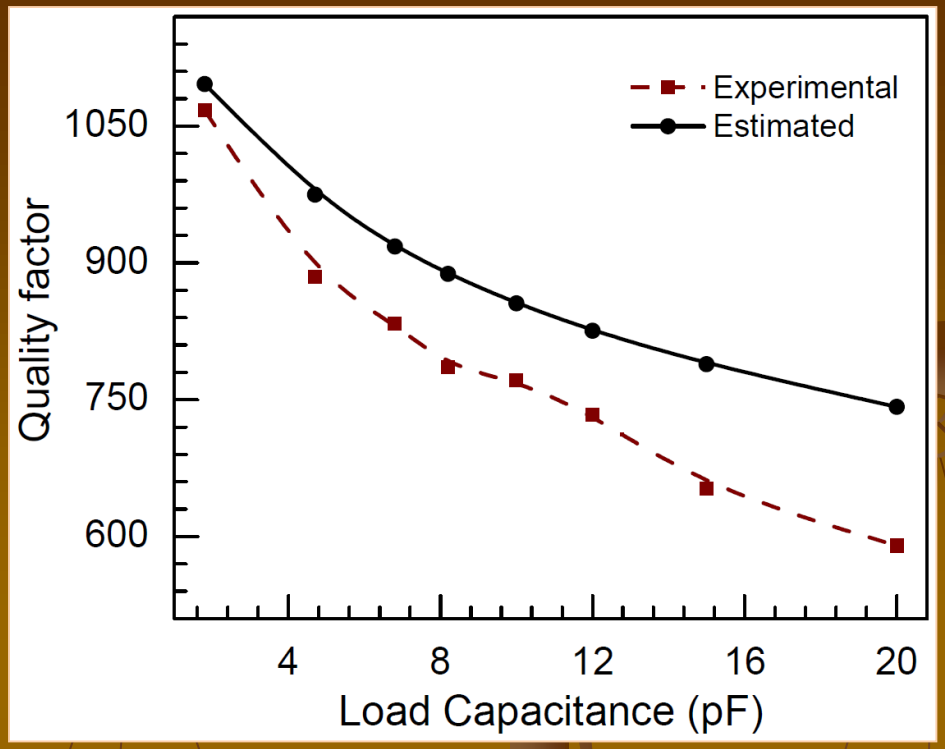


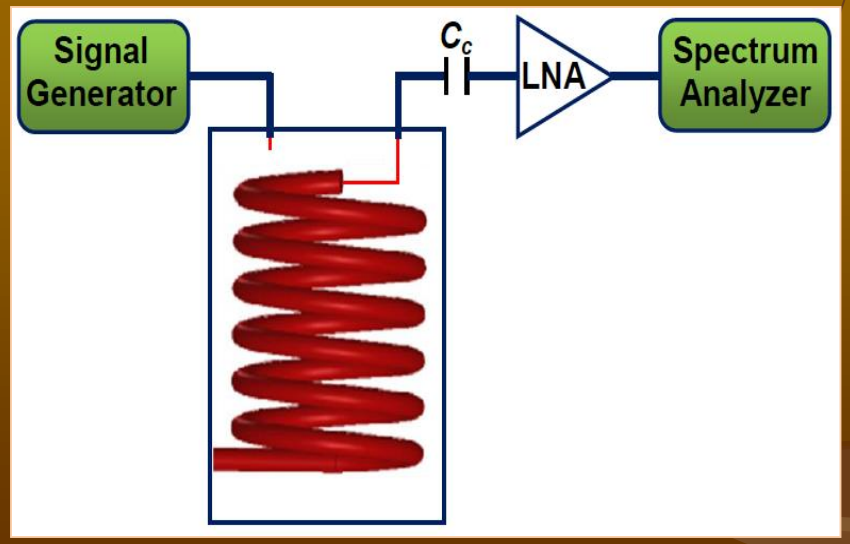


*With a coupling capacitor of 1.8 pF, a quality factor of 323 is obtained at a resonant frequency of 61.45 MHz.*

# Non destructive Detection of a cloud of Li/Be ions in a VEC Cryogenic Penning trap

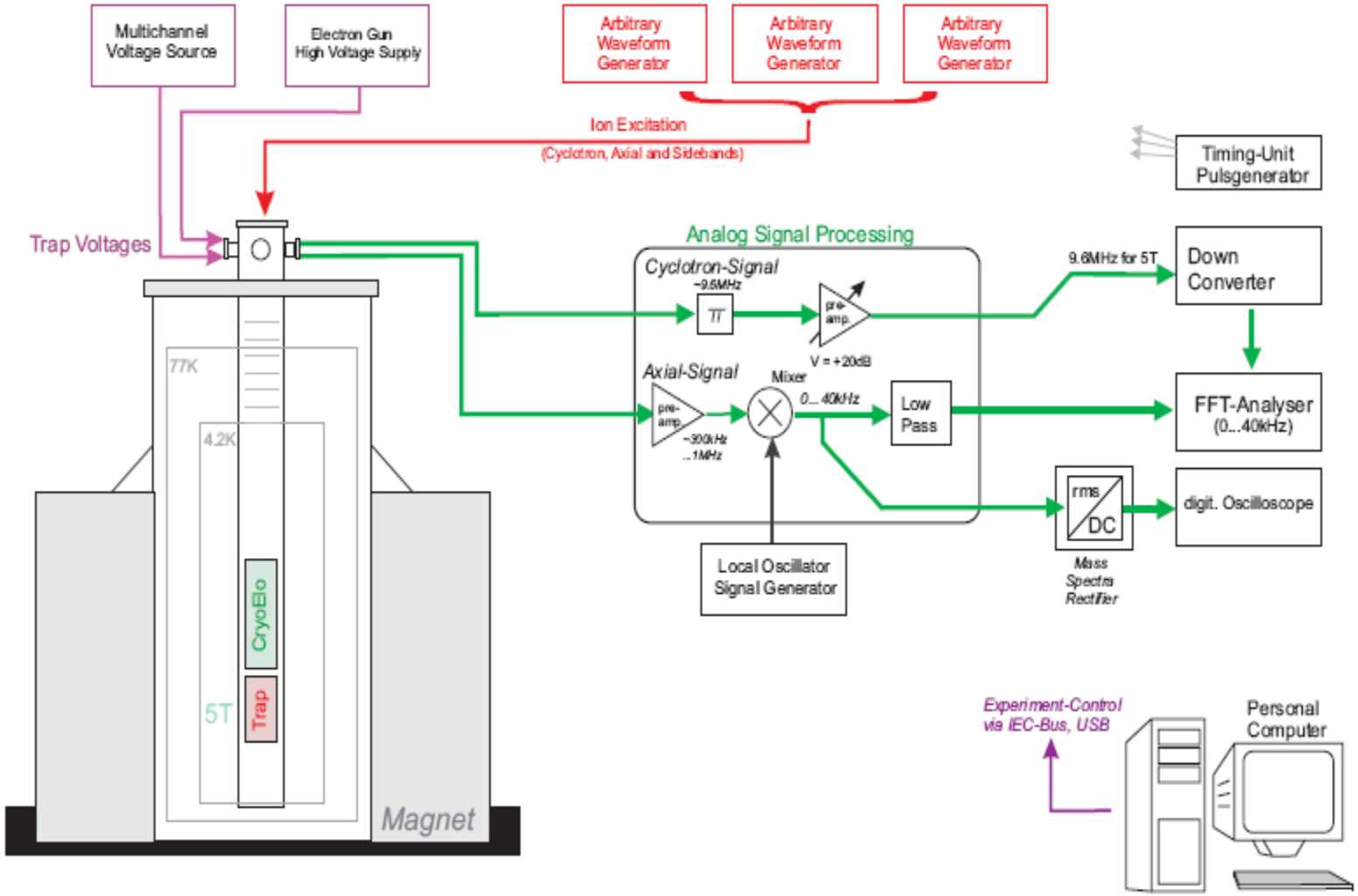

$Q = f_o / \Delta f$

# DETECTION SET UP FOR TRAPPED IONS

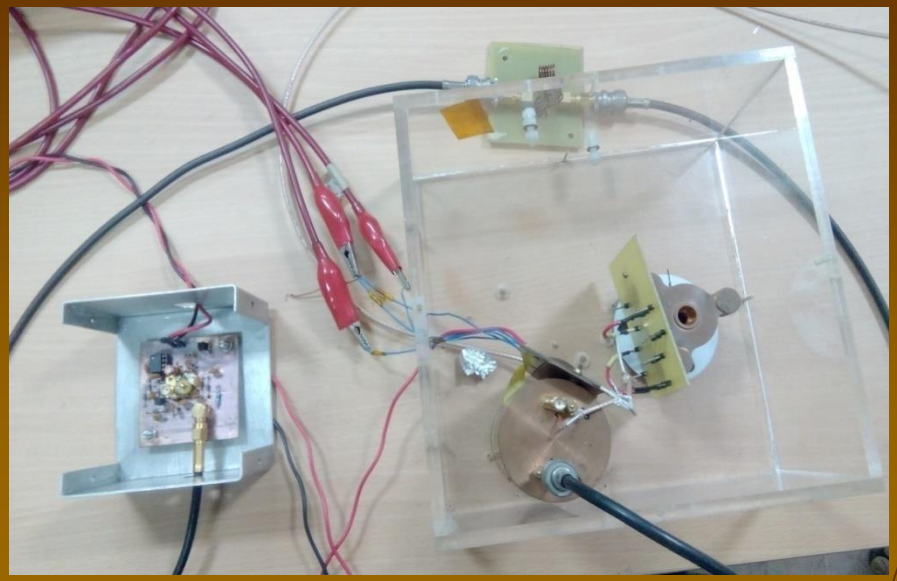

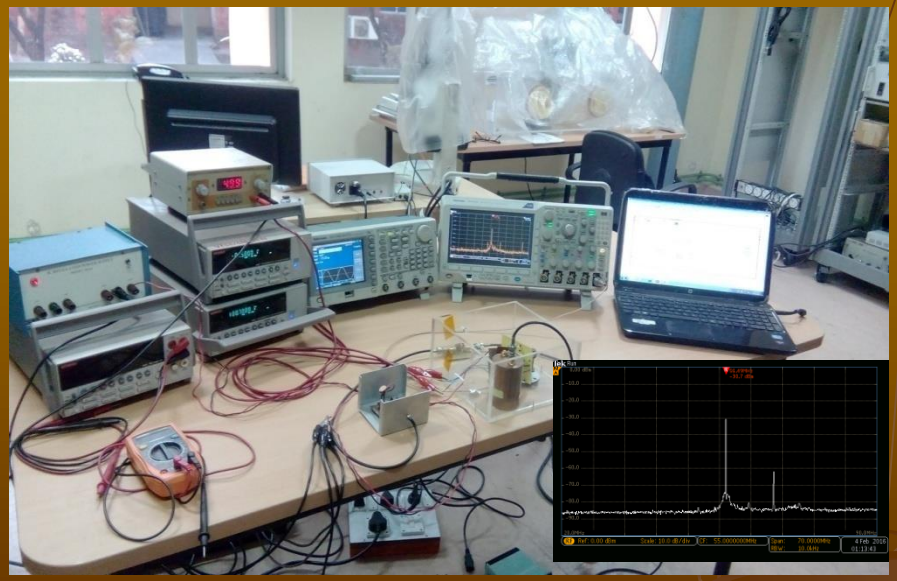

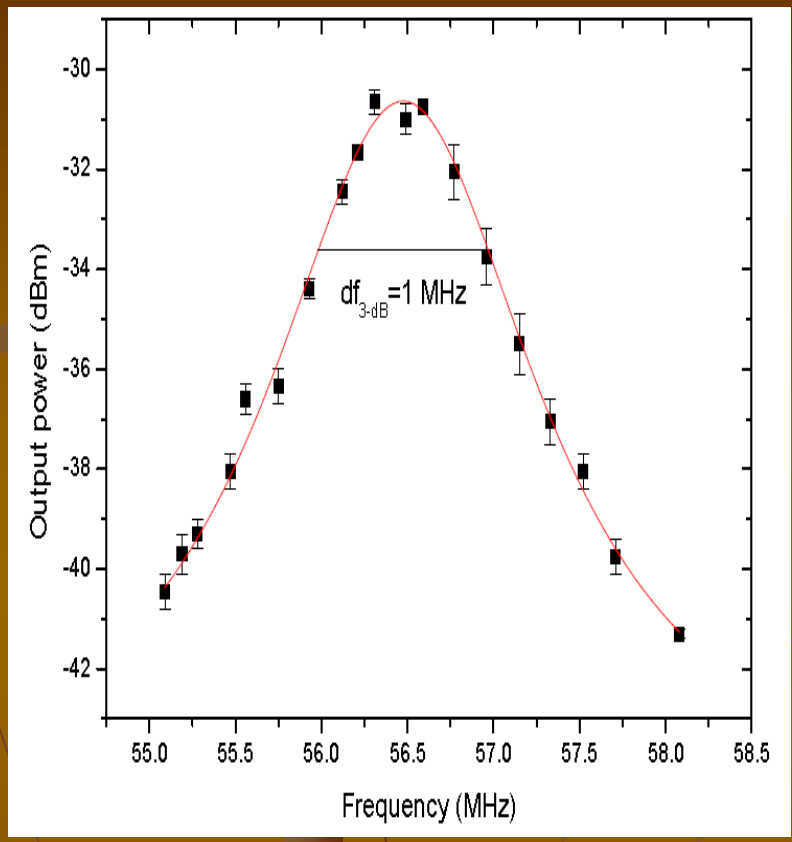


| Resonant frequency ($f_o$) | 3-dB bandwidth ($\Delta f$) | Quality factor ( ) |
|---|---|---|
| 56.47 MHz | 1 MHz | 56.47 |

# PROPOSAL AT FAIR

## *High precision Q-value measurement*

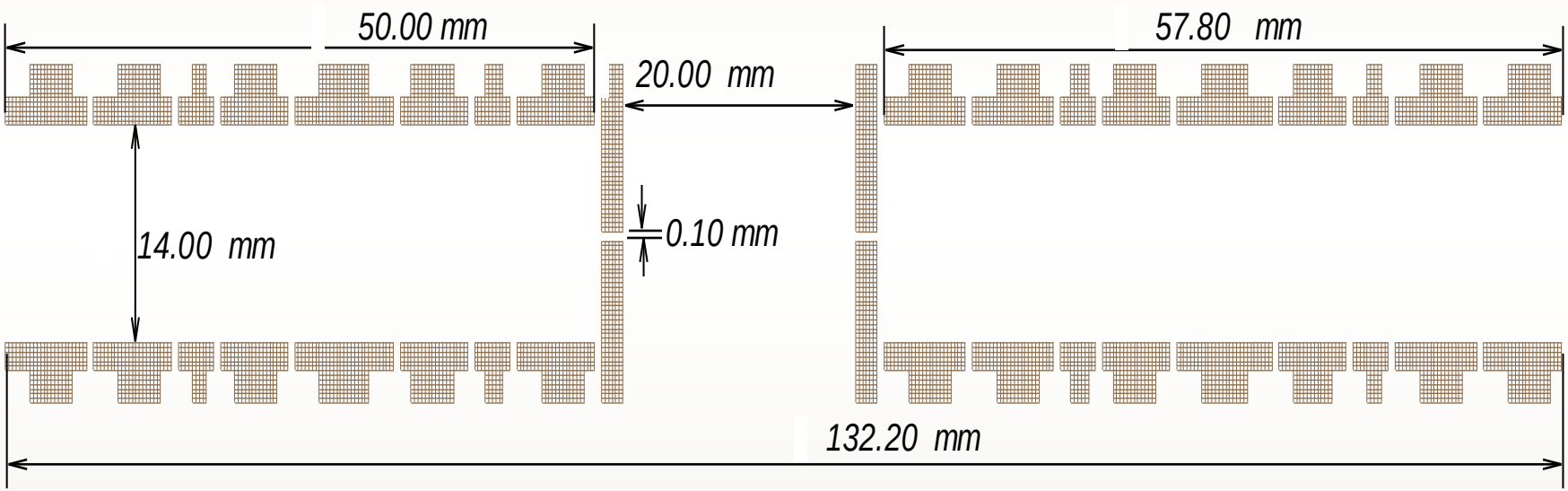


**<u>19 Electrode TRAP Assembly</u>**

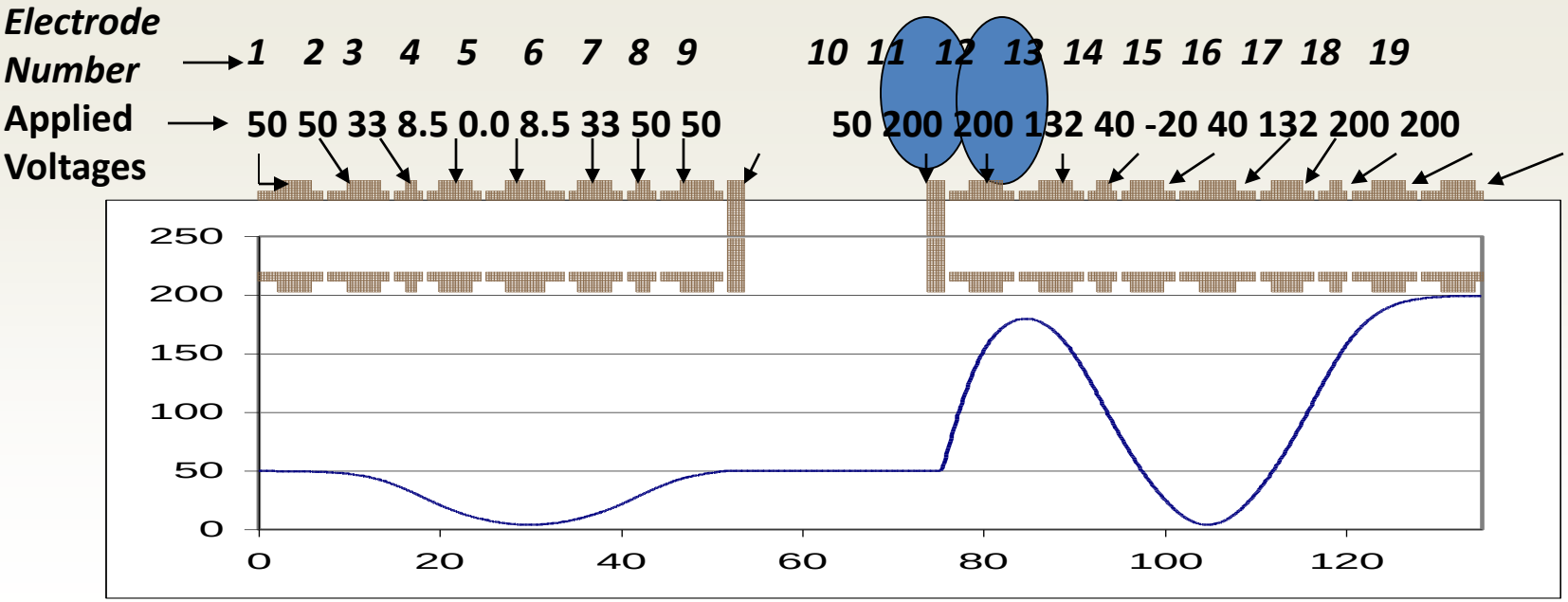


**Simulation Result for Ion of mass 100 amu recoiling with with 180 eV**

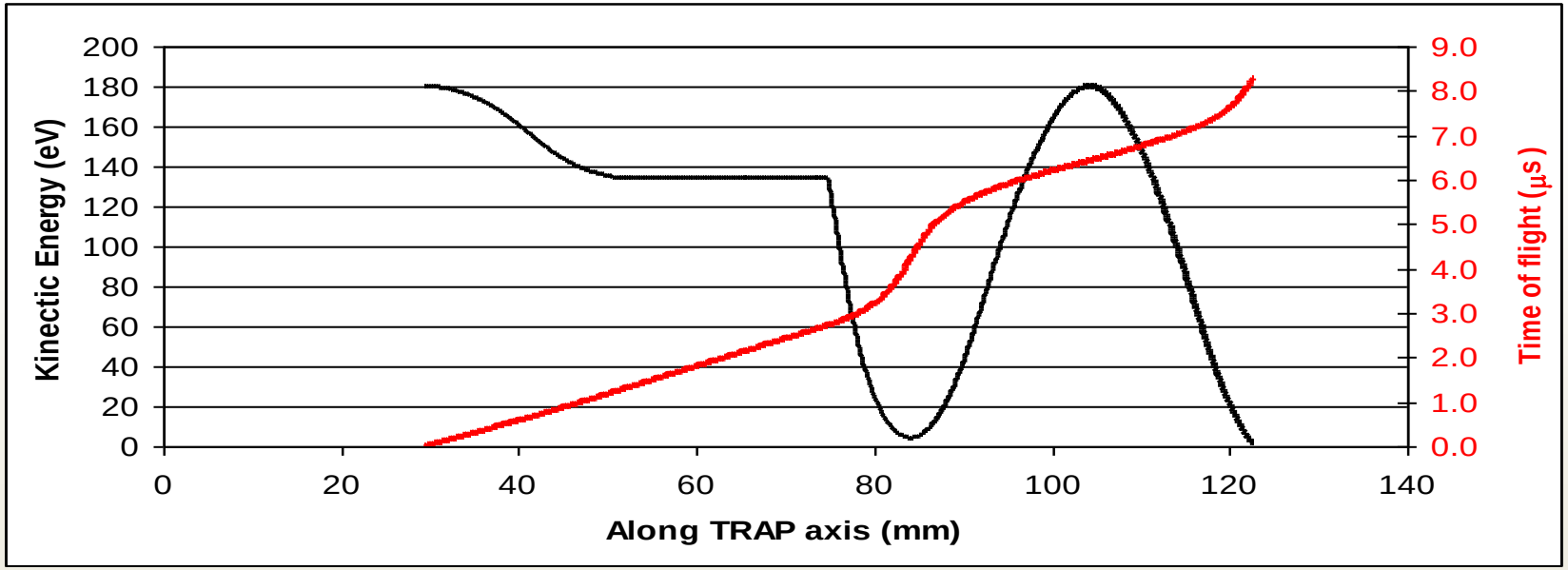

COLLABORATORS
DR AMLAN RAY
ARINDAM SIKDAR

***Contributors***
***Prof. Kumardeb Banerjee (Jadavpur Unniversity)***
***Ashif Reza, DGFS-PhD fellow***
***Dr Pushpa Rao (BARC)***

*Thank you*

# *Noise Sources in FET*

- **Frequency independent thermal noise in the drain-source channel**
- **Gate noise induced by the channel thermal noise via Gate-Drain capacitance**
- **Flicker noise (1/f noise) due to the fluctuations in generation and recombination rate of charge carriers in the depletion region of the FET**
- **Shot noise due to the leakage current flowing from gate to channel**

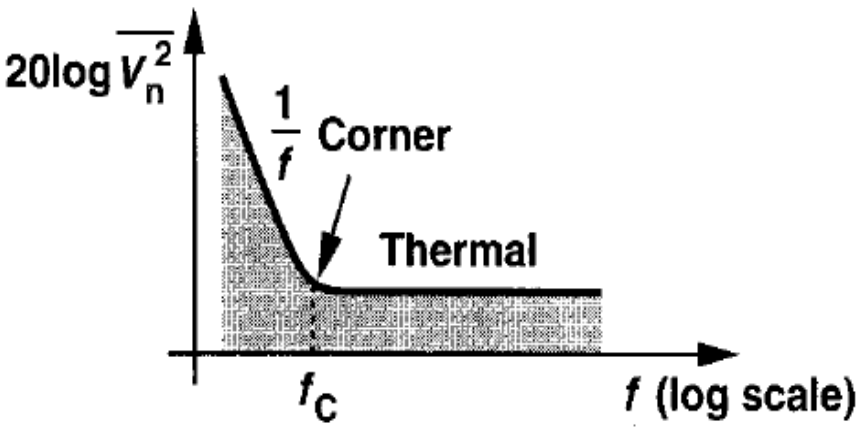


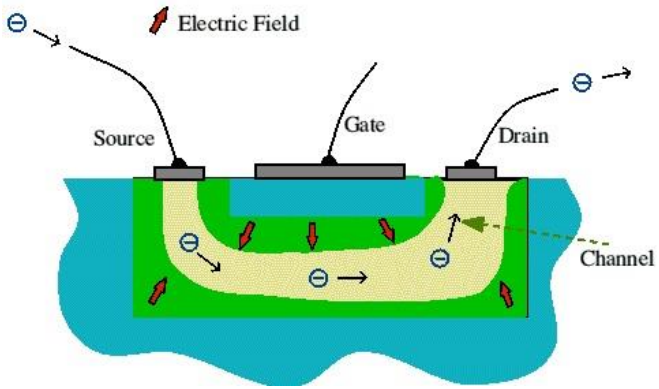


**For frequencies in excess of 10 MHz the channel thermal noise is the dominant noise contribution.**

# *Channel Thermal Noise in FET*

- **In a FET, the conducting drain-source channel has an effective resistance that causes thermal noise**

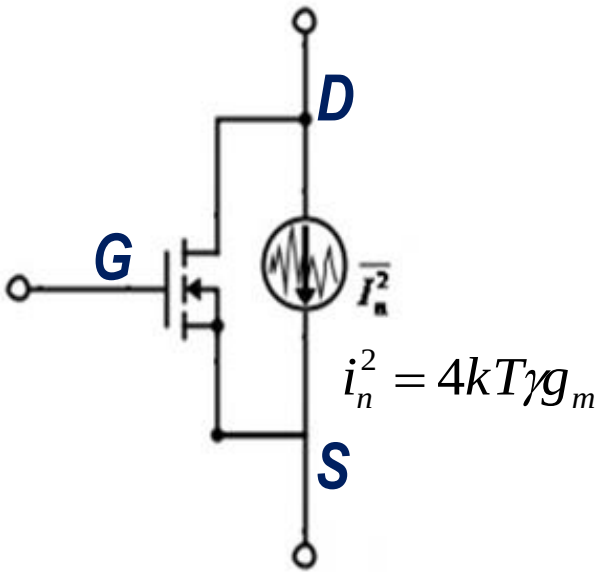


$$i_n^2 = 4kT\gamma g_m$$

*FET current noise model*

$$v_n^2 = \frac{4kT\gamma}{g_m}$$

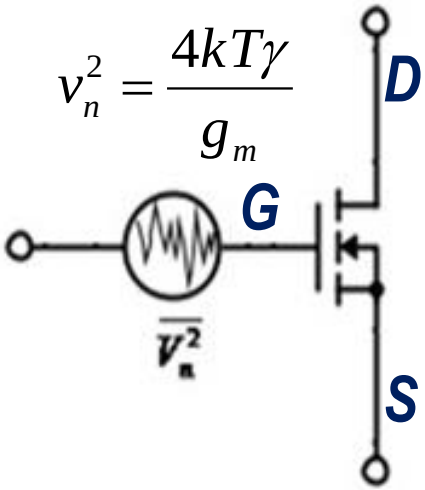


*FET voltage noise model*

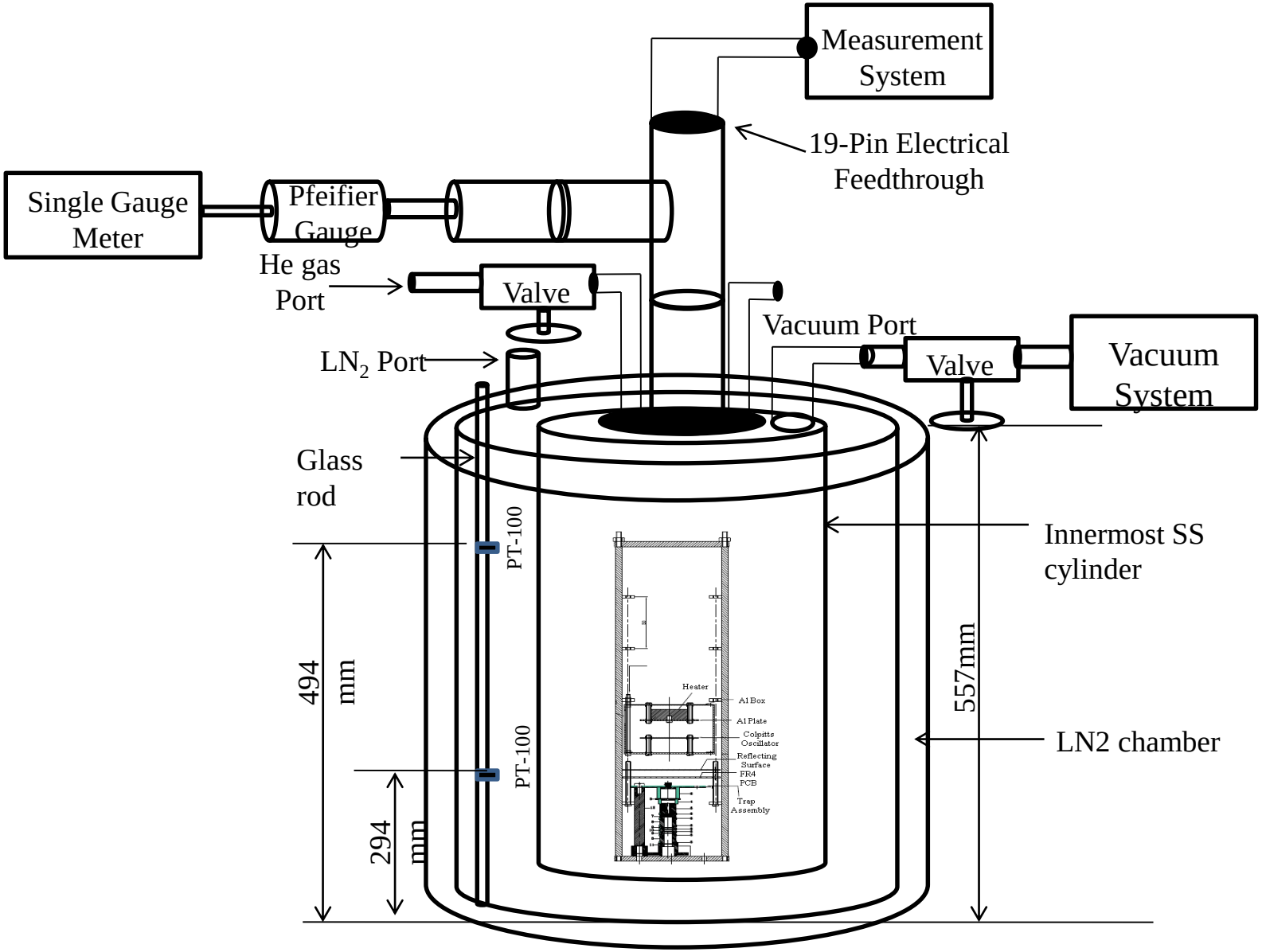


***The setup holding assembly within LN2 cryostat***

# *Helical Resonator Simulation*

## *High Frequency Structure Simulation (HFSS)*

- **A high performance full-wave electromagnetic field simulator**
- **Employs finite element method solver for electromagnetic structures**
- **Solves a wide range of microwave, RF and high speed digital appllications**
- **Calculate parameters of a geometrical structure such as S-parameters, resonant frequency and quality factor etc.**
- **Geometrical model is automatically divided into an efficient and accurate tetrahedral mesh for the simulation**