The Level-1 Tile-Muon Trigger in the Tile Calorimeter Upgrade Program

Andrey Ryzhov, IHEP, Protvino, Russia
on behalf of the ATLAS Collaboration

Introduction – *Sixteen Tile Muon Digitizer Boards (TMDBs) have been installed in the ATLAS cavern and integrated with the Tile Calorimeter*

The ATLAS Tile Calorimeter

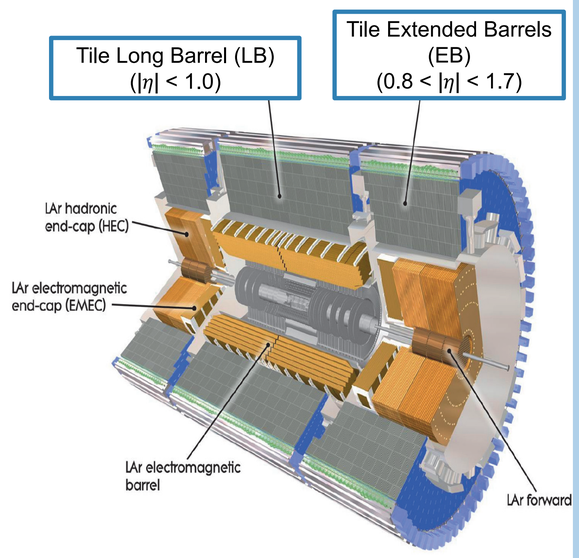

The Tile Calorimeter (TileCal) is the central hadronic calorimeter of the ATLAS experiment at the Large Hadron Collider (LHC).

- Hadronic sampling calorimeter using steel as absorber, scintillating tiles as an active medium and wavelength-shifting fibers
- Divided into long barrel (LB) and two extended barrels (EB) with overall dimensions of ~12 m length and 4.25 m (2.28 m) outer (inner) radius
- Granularity:
  - 64 wedge-shaped modules $\Delta\varphi = 0.1$
  - 3 radial layers: A ($\Delta\eta = 0.1$), BC ($\Delta\eta = 0.1$), D ($\Delta\eta = 0.2$) and special layer E (single scintillators in the gap between LB and EB)
- Each normal cell is read out by two photomultiplier tubes (PMT Left and Right) to achieve uniform response; 5k cells, 10k PMTs
- Dynamic range of PMT: 10 MeV to 750 GeV
- Performance goals:
  - Energy resolution for jets: $\sigma/E = 50\%/\sqrt{E} \oplus 3\%$
  - Linear within 2% (4 TeV jets)
  - Hermetic coverage for E_T^{miss} reconstruction

TMDB Crate and TMDB

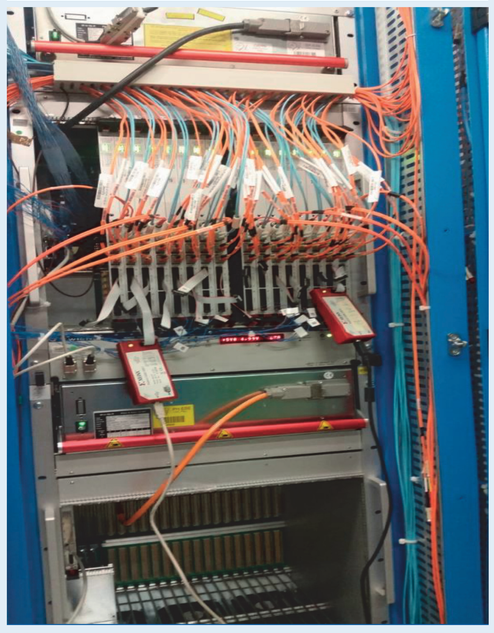

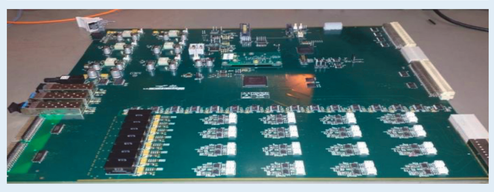

Latest Results – Efficiency of Tile-Muon Trigger

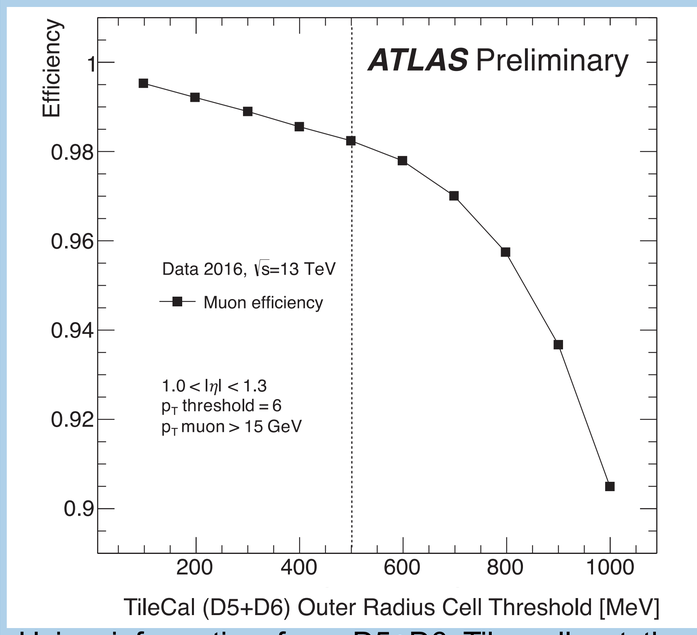

Using information from D5+D6 Tile cells at the outer radius of the extended barrel covering 1.0 < |η| < 1.3 and a threshold cut of 500 MeV, a muon detection efficiency of 98.2% is achieved, while L1_MU20 Trigger rate is reduced by 82%.

Motivations of the Tile-Muon Trigger Project

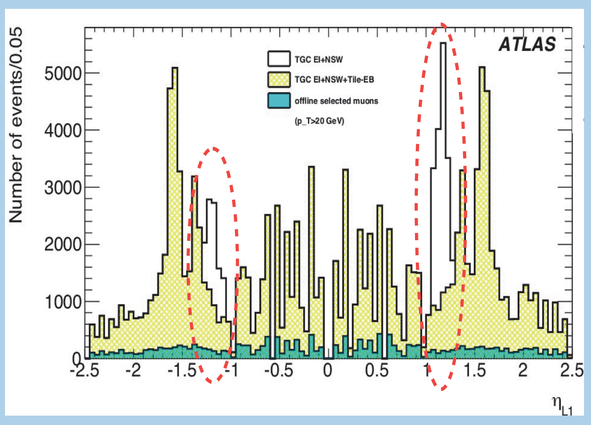

The η distribution of the Level-1 Muon Trigger with a p_T threshold at 20 GeV

The main source of the Level-1 Muon-Trigger background in the end-cap region is low momentum protons emerging from magnets and shielding in the forward region. They produce correlated hits leading to coincidences in the trigger chambers up to the highest transverse momentum muon threshold. Requiring a coincidence with some other detectors lying inside the toroid magnets and shielding would lower the rate.

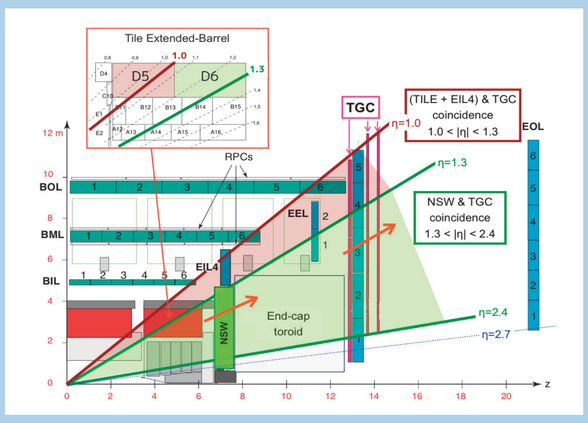

The ATLAS Muon Spectrometer and the Tile Calorimeter

The Tile Calorimeter provides highly segmented energy measurements for incident particles. Information from its outer radius layer can assist the Level-1 Muon Trigger in muon tagging. It can help in the rejection of fake muon triggers arising from background radiation without degrading the trigger efficiency.

The activation of the TileCal outermost D-layer to assist the Level-1 Muon-Trigger provided by Thin Gap Chambers (TGC) is very important part of ATLAS upgrade program.

Tile Muon Digitizer Board (TMDB)

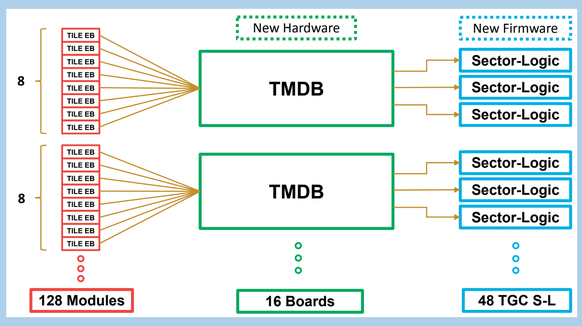

The Tile Muon Digitizer Board (TMDB) has been designed to process (receive and digitize) the data coming from the D-layer channels of the TileCal extended barrel, estimate energy with the Matched Filter (MF) approach and apply threshold. The result is sent to the TGC Sector-Logic Boards. Since each TileCal cell has double readout and the information from D5 and D6 cells are used, the TMDB system processes a total of 512 signals. On the TGC side, 48 Sector-Logic Boards receive the TMDB output signal to process the final decision.

Based on those requirements, the system was designed with 16 TMDB's (8 per partition) with 32 channels (i.e. 8 Tile modules) and 3 optical links to interface with the TGC S-L Boards.

System Overview

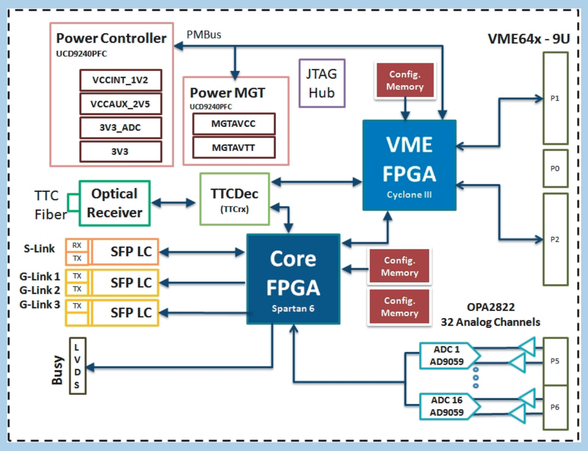

- Reception and digitization of 32 input D5 and D6 analog channels
- 1 Spartan-6 FPGA for core processing
- 1 Cyclone III FPGA for VME interface
- 1 optical receiver for TTC signal
- TTCDec mezzanine for TTC signal decoding
- Output data available via optical links:
  - 3 G-LINKS for communication with Sector-Logic (800 Mbps) – trigger decision
  - 1 S-LINK for ROD functionality (2.0 Gbps) – ADC raw data, energy reconstruction, trigger decision

TMDB Core Firmware Overview

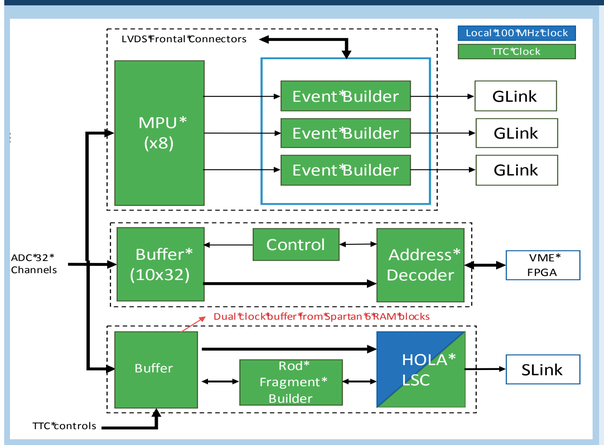

- Main Block – Module Processing Unit (MPU)

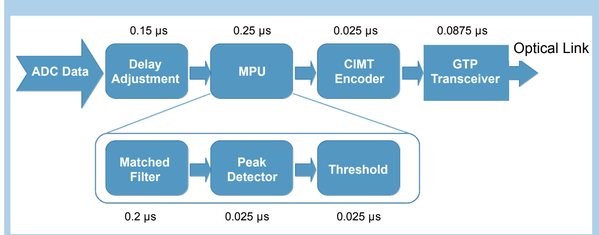

- Latency obtained through firmware simulation is 0.5125 microseconds
- The allowed latency is ~0.5 microseconds

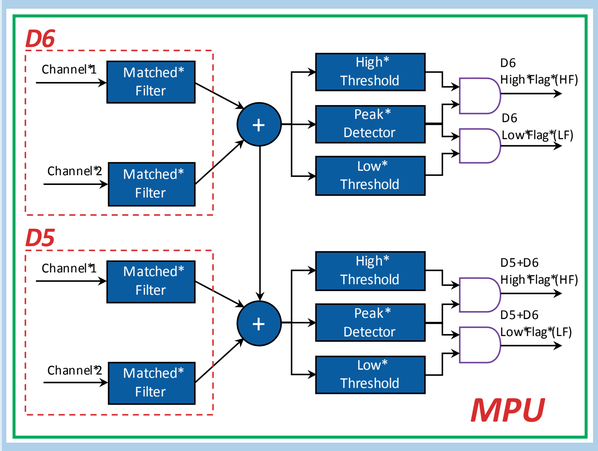

- Energy reconstruction is based on the Matched Filter approach, in which the coefficients are estimated per channel using the reference pulse-shape and the noise covariance matrix
- The energy is estimated by performing the inner product between the MF coefficients and the incoming time samples
- Trigger decision is obtained via AND logic between "Peak-detector" and "Thresholds"

Calibration of TMDB output

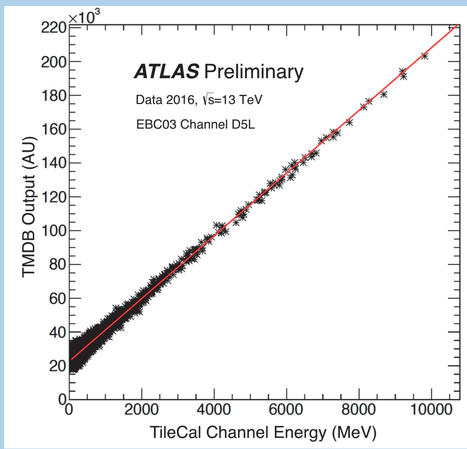

- The TMDB output (estimated by Matched Filter, arbitrary units) is converted to energy in MeV in accordance with the calibration parameter obtained in advance
- The calibration constants are computed through a linear fit based on the TileCal channel energy in MeV reconstructed offline

TMDB Noise RMS (in MeV) per channel

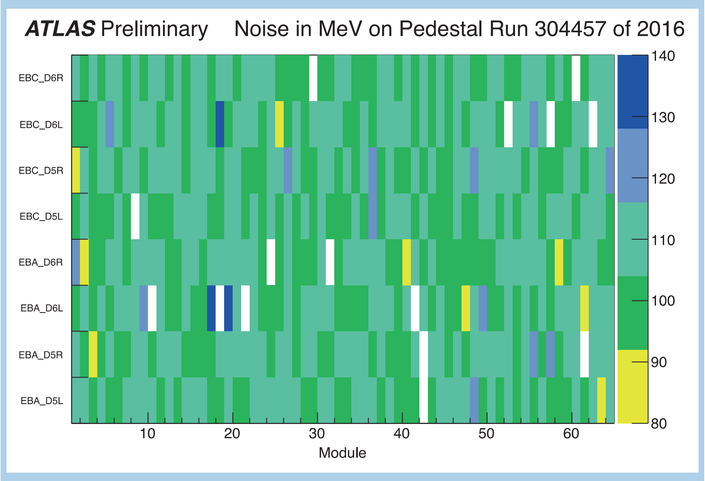

- 14 channels have problems (2.7%) – white color
- Global noise RMS is better than the estimation (140 MeV):
  - Side A (EBA): 105.5 MeV
  - Side C (EBC): 105.3 MeV

During one of the technical stops of the LHC in 2015, TMDBs had been installed and integrated into the Tile Calorimeter. ATLAS online software has been modified to include TMDB segments in TileCal.