Summary and re-optimized Performance Document

Nico Serra
University of Zurich

8th SHiP Collaboration Meeting
13th-15th June 2016
Imperial College London

Introduction

Technical Proposal

Now

- SHiP is sailing very fast
- And changing a lot!
- The idea is to write a document for the re-optimisation phase

Introduction

Technical Proposal

Now

- SHiP is sailing very fast
- And changing a lot!
- The idea is to write a document for the re-optimisation phase

New Simulation

First iteration (Intermediate document):

- Geometry: dimensions of the decay volume, starting and ending point, shape, ...
- Vacuum VS He: Looks like the driving parameter here is the cost
- PID performances: As Gaia pointed out we should have a strategy to decide on the requirements

We need to do performance studies with the re-optimized SHiP and updated cost -> "progress report" to the SPSC

These studies will be the input to a more advanced/longer document which will include all sub detector details

Current Status of Background Studies

Iaroslava studied the impact of neutrino in the air

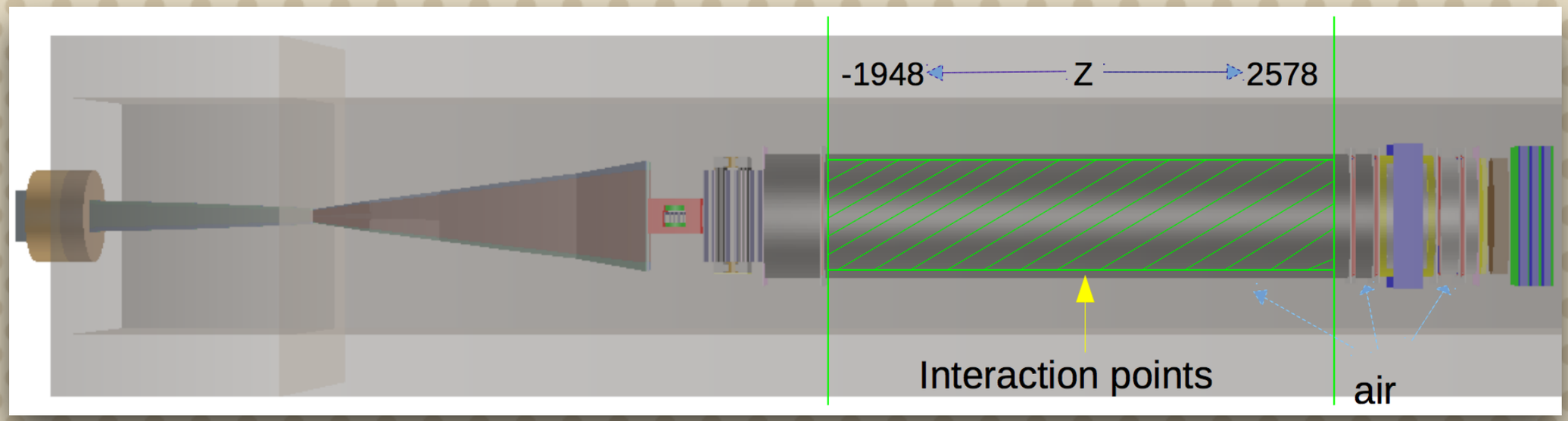

- Fully reconstructed signal N->mu pi : O(1) bkg events with or without veto

- Partially reconstructed signal: 40 events without veto, 4 with the veto, zero with the PID (see also Behzad)

- Take these numbers with care: we only studied in details HNLs, we cannot afford to narrow down our physics case

Status of SignalS

- We are shifting from a paradigm where we had 0.1 expected total bkg, to a paradigm where we study exclusive final states

- This is good, but we need to study the implications for all signals, in collaboration with the people studying the various signals

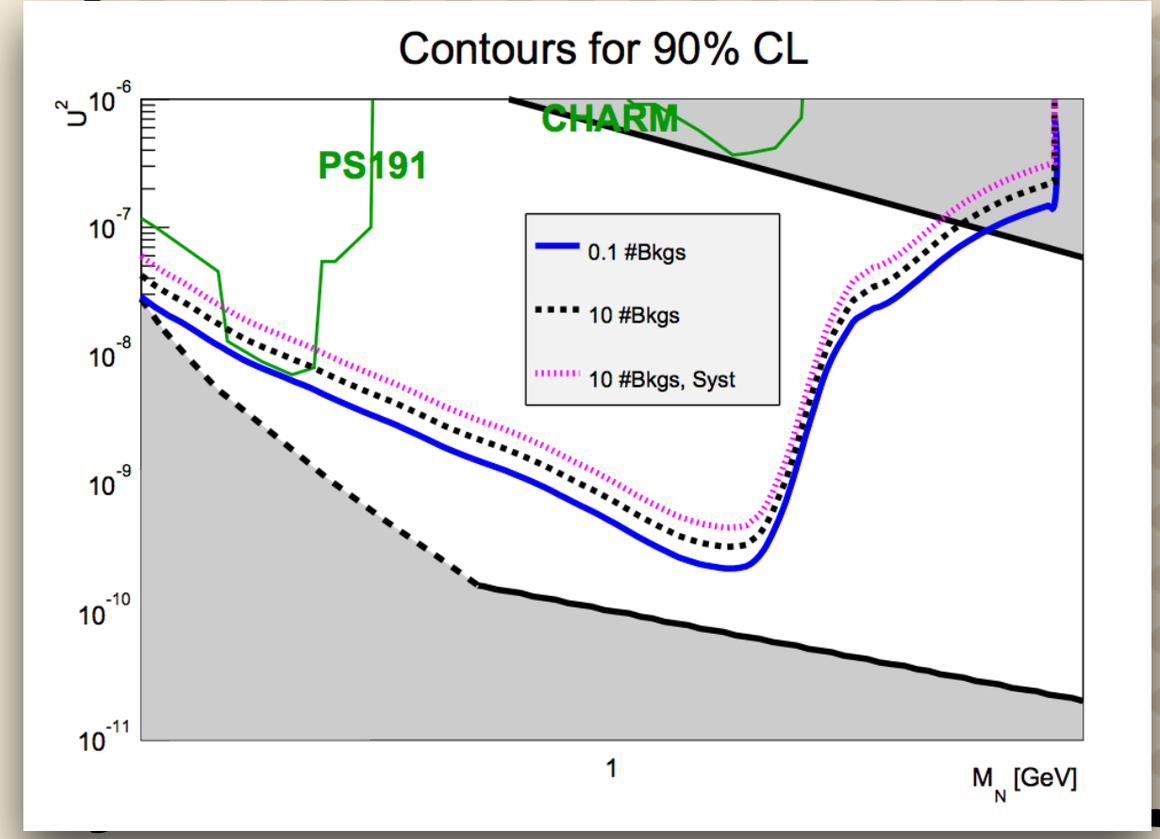

- Old plot in the addendum should be updated with the re-optimized geometry and the new paradigm

Status of SignalS

- R-parity neutralino (implemented in FairSHiP by Kostas)
- Dark Scalar (work in progress by Gaia)
- Axino (one presentation by Ki Young Choi, but very slow or no progress)
- ALPs (background studies from Walter), need implementation
- Dark Photon is one of our main channels, no FairSHiP implementation
- Dirac goldstino (Alexey/Oleg did studies with toys, we need FairSHiP implementation)
- .....

"New" Signals

Photophobic Dark Photon :-)

Evidence for a Protophobic Fifth Force from ^{8}Be Nuclear Transitions

Jonathan L. Feng,[1] Bartosz Fornal,[1] Iftah Galon,[1] Susan Gardner,[1,2]
Jordan Smolinsky,[1] Tim M. P. Tait,[1] and Philip Tanedo[1]

[1] *Department of Physics and Astronomy, University of California, Irvine, California 92697-4575 USA*
[2] *Department of Physics and Astronomy, University of Kentucky, Lexington, Kentucky 40506-0055 USA*

arXiv:1604.07411

We should understand what is our sensitivity since they cite SHiP in their paper

Strongly interacting Dark Matter

The SIMPlest Miracle

Yonit Hochberg[1,2],* Eric Kuflik[3],† Hitoshi Murayama[1,2,4],‡ Tomer Volansky[5],§ and Jay G. Wacker[6,7]¶
[1] *Ernest Orlando Lawrence Berkeley National Laboratory, University of California, Berkeley, CA 94720, USA*
[2] *Department of Physics, University of California, Berkeley, CA 94720, USA*
[3] *Department of Physics, LEPP, Cornell University, Ithaca NY 14853, USA*
[4] *Kavli Institute for the Physics and Mathematics of the Universe (WPI), Todai Institutes for Advanced Study, University of Tokyo, Kashiwa 277-8583, Japan*
[5] *Department of Physics, Tel Aviv University, Tel Aviv, Israel*
[6] *Quora, Mountain View, CA 94041 USA and*
[7] *Stanford Institute for Theoretical Physics, Stanford University, Stanford, CA 94305 USA*

arXiv:1411.3727

Beautiful idea predicts 1GeV particles of the type we are looking AND Dark Matter copiously produced in SHiP

Dark Matter Searches

- Several models predicts large DM fluxes in SHiP-like experiments

- Andrey, Giovanni, Yandex are studying the idea of using the emulsion spectrometer for these searches

- This would be a major addition to our physics case

- Remember that if the mediator of the Dark Sector couples with DM and if DM particles are light enough the Dark Sector particles will not reach out detector

Re-optimization

- We need to update all background studies in the re-optimization configuration:
  - Muon inelastic (how about interaction in He?)
  - Cosmic muons
  - Neutrino scattering in the material
  - Combinatorial

- These backgrounds were not studied with the same details as the bkg neutrino in the air

- We should have a strategy to actually prove with data

Summary

- We are in the re-optimization phase and we need to have answer about Geometry, He/Vacuum, PID requirements

- We should make performance evaluation studies in the re-optimized scenario (also we should get on with these studies to make the decisions)

- Prepare a short 30ish page document spring next year with updated sensitivities and background


ПОБЕДА