The 3D digital SiPM for nEXO

Jean-François Pratte

F. Bourque, T. Rossignol, X. Bernard, S. Parent, V.-P. Rhéaume, M. Côté, L. Maurais, F. Nolet, T. Dequivre, E. Al Alam, F. Vachon R. Fontaine, D. Danovitch, J. Sylvestre, S. Charlebois

Institut Interdisciplinaire d'Innovation Technologique (3IT), Université de Sherbrooke

Front-End Electronics 2016
AGH University of Science and Technology
Krakov, Poland
May 31th – June 3rd 2016

UNIVERSITÉ DE SHERBROOKE

GRAMS

FINALLY! SHERBROOKE HAS WORKING 3D DIGITAL SIPM!

The 3D digital SiPM for nEXO

Jean-François Pratte

Frédéric Bourque, Tommy Rossignol, Xavier Bernard, Samuel Parent, Vincent Philippe Rhéaume, Maxime Côté, Luc Maurais, Frédéric Nolet, Thomas Dequivre, Elias Al Alam, Réjean Fontaine, David Danovitch, Julien Sylvestre, Serge Charlebois

Institut Interdisciplinaire d'Innovation Technologique (3IT), Université de Sherbrooke

Front-End Electronics 2016
AGH University of Science and Technology
Krakov, Poland
May 31th – June 3rd 2016

UNIVERSITÉ DE SHERBROOKE

GRAMS

Presentation outlines

- What is nEXO?
- Focus of the photodetectors and front-end for nEXO
  - Why go digital instead of analog SiPM?
- Sherbrooke's architecture proposal based on 3D digital SiPM
- Power consumption
- Sherbrooke's first 3D digital SiPM working prototype

ν Oscillations 2015 Nobel Prize

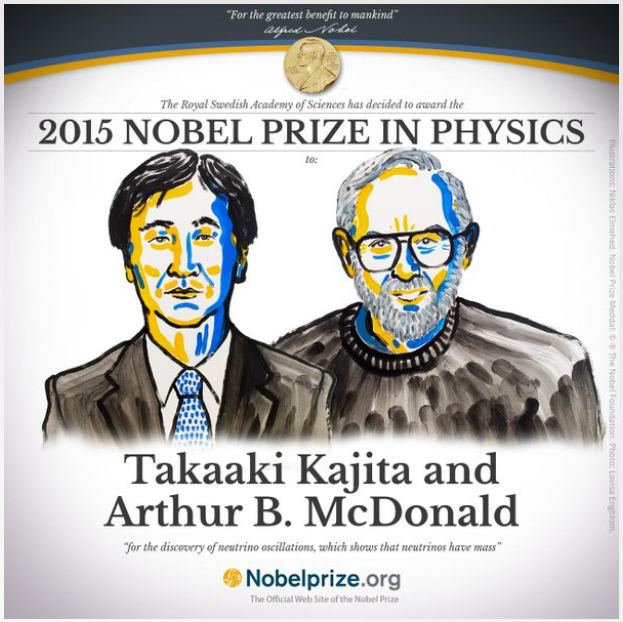

Nobel prize in physics 2015

awarded to

Takaaki Kajita

Super-Kamiokande Collaboration

University of Tokyo, Kashiwa, Japan

and

Arthur B. McDonald

Sudbury Neutrino Observatory Collaboration

Queen's University, Kingston, Canada

Breakthrough Price in Fundamental Physics 2016

awarded jointly to the Daya Bay, Kamland, SNO, Super-Kamiokande (Super-K), and T2K/K2K collaborations *"for the fundamental discovery of neutrino oscillations, revealing a new frontier beyond, and possibly far beyond, the standard model of particle physics."*

0νββ

So, **neutrino** has **mass**, but the actual mass is **unknown**…

A **measurement** that would shed light both on the **actual mass** of a neutrino and the **origin** of this mass is the detection of an extremely rare process known as neutrino-less double beta decay (0νββ).

Additionally, observation of this process could shed light on another fundamental mystery: why in a Big Bang that started with pure energy we ended up with a universe composed almost entirely of **matter** but no **anti-matter**?

Standard model

2ν double β - decay

$$2\,n \rightarrow 2\,p + 2\,\beta^- + 2\,\overline{\nu}_e$$

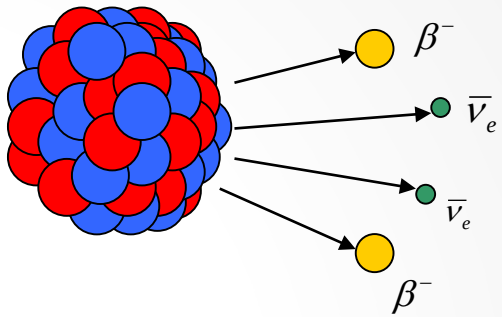

New physics

0ν double β - decay

$$2\,n \rightarrow 2\,p + 2\,\beta^- + 0\,\overline{\nu}_e$$

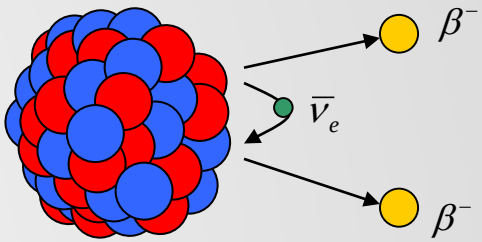

Lepton number conservation violated

EXO-200 to nEXO

- nEXO = (next) Enriched Xenon Observatory
- Recently, EXO-200 proved the existence of 2νββ in Xenon
  - If 2νββ did not exist, then 0νββ would not exist

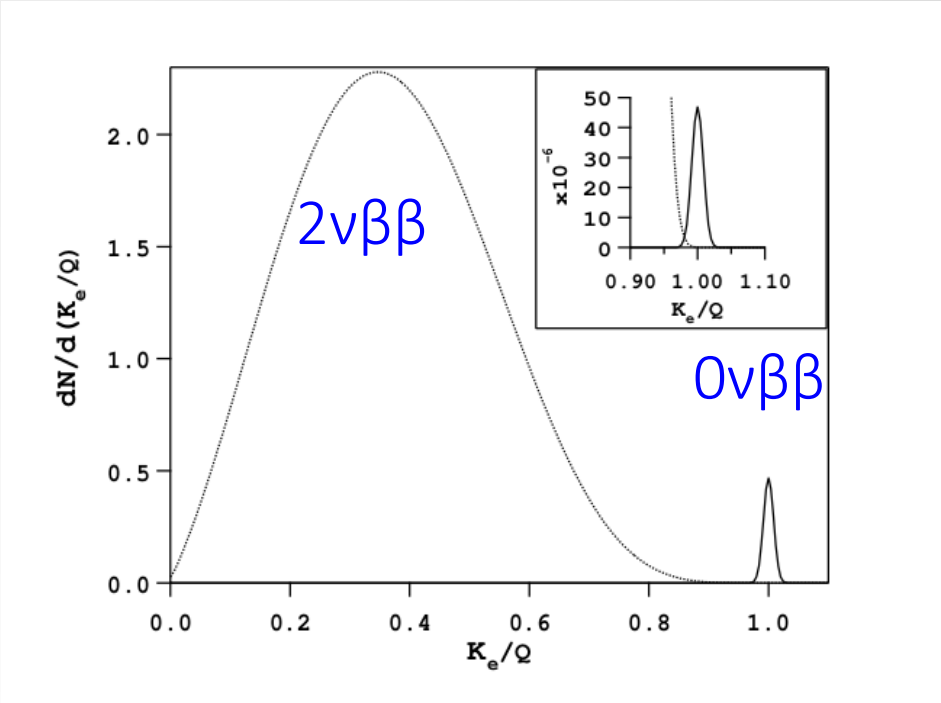

- High sensitivity + excellent energy resolution required

Are you patient?... Some numbers

Natural radiation decay rates

A banana	~10 decays/s
A bicycle tire	~0.3 decays/s
1 L outdoor air	~1 decay/min

100 kg of ^{136}Xe (2ν) ~1 decay/10 min

$0\nu\beta\beta$ decay >1000 x more rare than $2\nu\beta\beta$

$0\nu\beta\beta$ half life in the order of ~10^{27} years

Age of universe 1.4×10^{10} years

For 5000 kg, < 20 events per year!

Source: Thomas Brunner

The EXO concept for the detection of 0νββ decay

- Large ultra-pure volume of enriched liquid ^{136}Xenon
  - Contaminants removed by filtering
  - Use ultra-low radioactivity material around the LXe
    - Then rely on self-shielding
- Measure ionization e^-
  - Reconstruct position on segmented anode (wires or pads/strips)
  - Excellent multi-pulse separation
- Measure scintillation photons
  - Timing for drift direction position reconstruction
  - Achieve excellent energy resolution combining with charge measurement

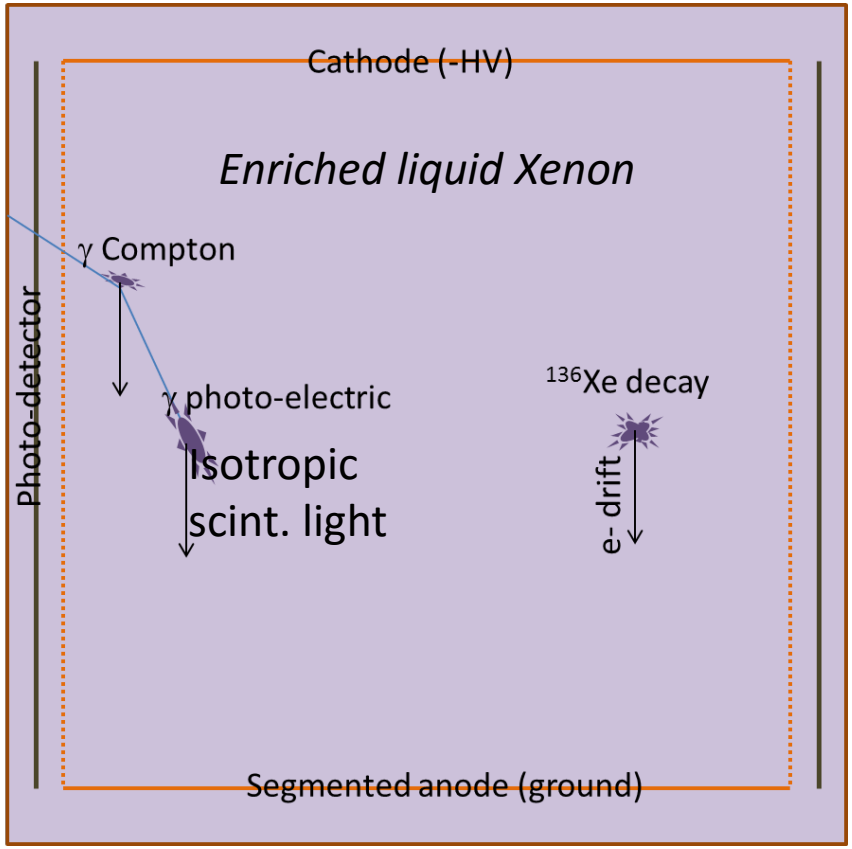

Source: nEXO collaboration, F Retiere

Searching for $0\nu\beta\beta$ with nEXO

Source: nEXO collaboration

EXO-200 for size comparison

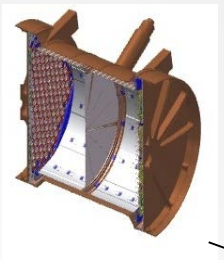

46 cm

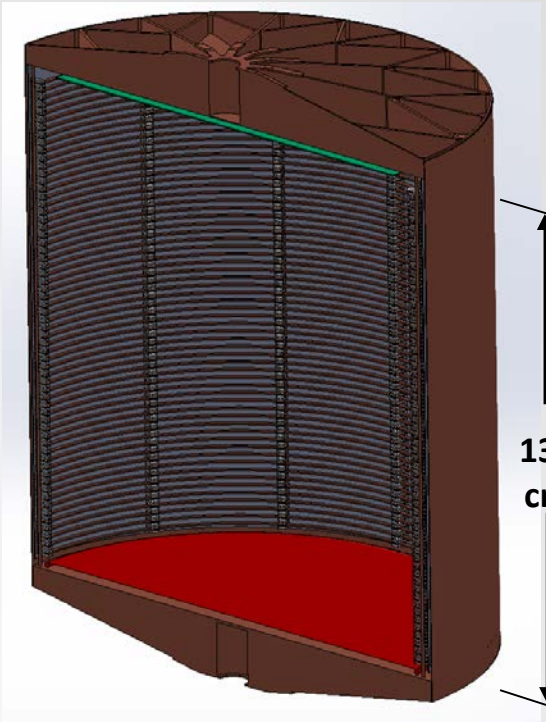

130 cm

nEXO TPC

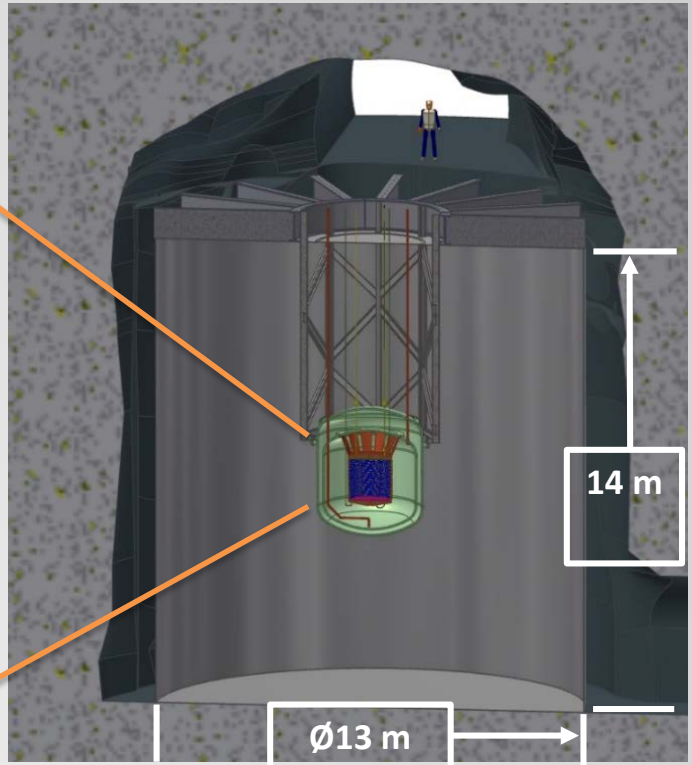

nEXO at the SNOlab Cryopit

- Next-generation neutrinoless double beta decay detector
- 5 t liquid xenon TPC similar to EXO-200 (50x the size)
- Possible location in SNOLab Cryo Pit (Sudbury Canada) (6010 mwe)

Searching for $0\nu\beta\beta$ with nEXO

- Analog SiPM or 3D digital SiPM for light detection
- Tiles for charge read out
- 3D event reconstruction
- Expected σ/E of 1% at Q-value

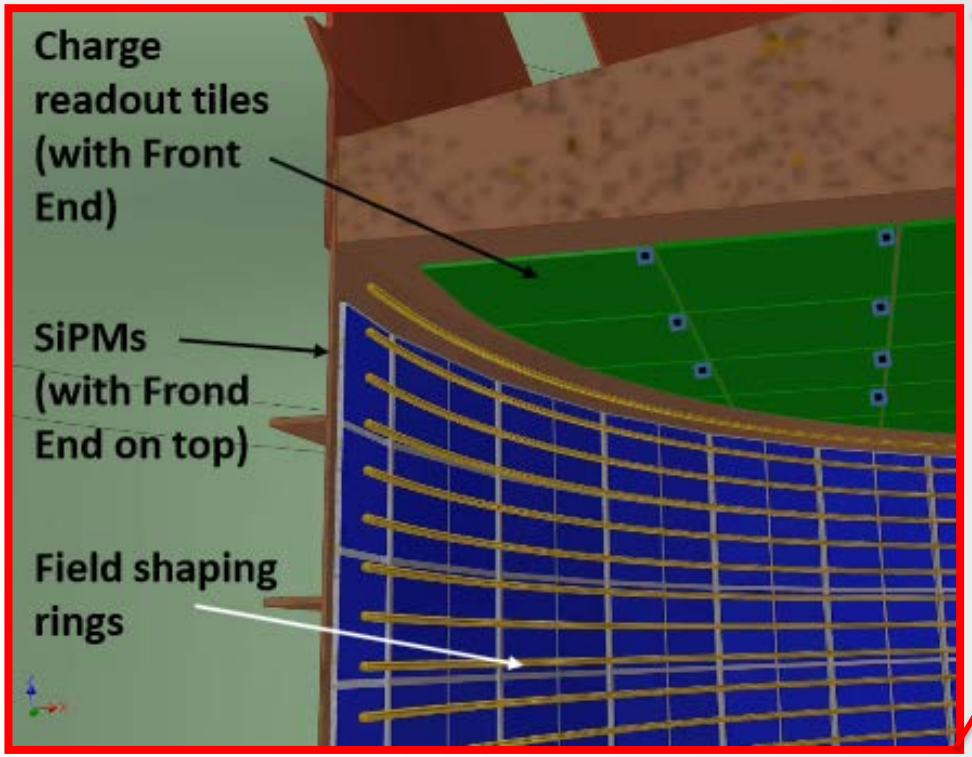

Source: nEXO collaboration

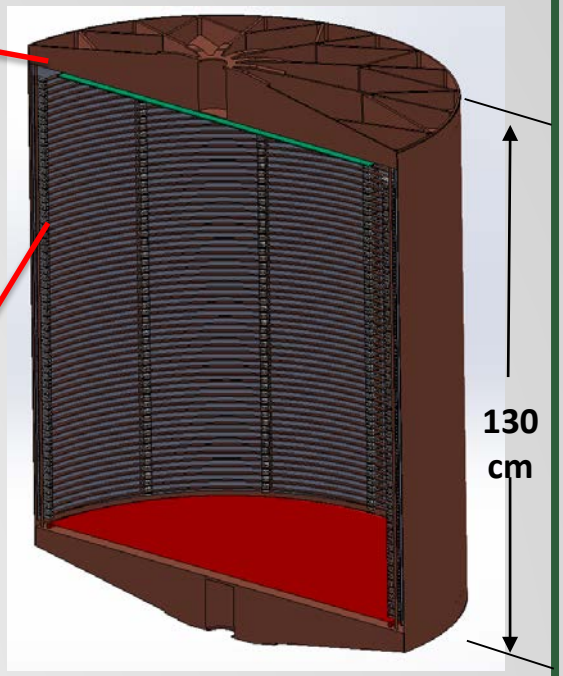

nEXO TPC

Photodetector + Front-End Electronics Requirements

- λ ^{136}Xe : 178 nm
- PDE: > 15% at 178 nm
- DCR: < 50 s^{-1}/mm^2
- Correlated avalanche probability: < 20%
- Very low photon counts
- Operating temperature: 161 K
  - **<u>Very low power dissipation required</u>**
  - Power budget: **<u>40 W for 4-5 m^2</u>** of photodetector!
  - Thermal and mechanical simulation required for packaging
- With less than 20 0νββ events per year… can't miss any ;-)
- Radio purity, low organic contamination and tracking of materials

→ the main challenge is making sure we understand the background so we can actually really identify the events as 0νββ.

Photodetector Potential Implementation

Two possible solutions currently considered:

- Analog SiPM
  - FBK
  - Ketek
  - Hamamatsu
- Analog front-end + ADC (ref: BNL)
  - Series and parallel connections of SiPM per channel

OR

- 3D digital SiPM
  - Each SPAD digitized individually
    - Modified FBK or Ketek SiPM
    - Sherbrooke's new SPAD array (underway)
  - Mixed-signal front-end electronics integrated under the SPAD array in 3D

Single Photon Avalanche Diode: the basic cell of SiPM

SPAD (Geiger mode)
Gain = 10^4-10^6
$V_{BR} < V_{bias}$
metastable

Avalanche Photodiode
Gain = 10-1000
$V_{APD} < V_{bias} < V_{BR}$

Photodiode
Gain = 1
$V_{bias} < V_{APD}$

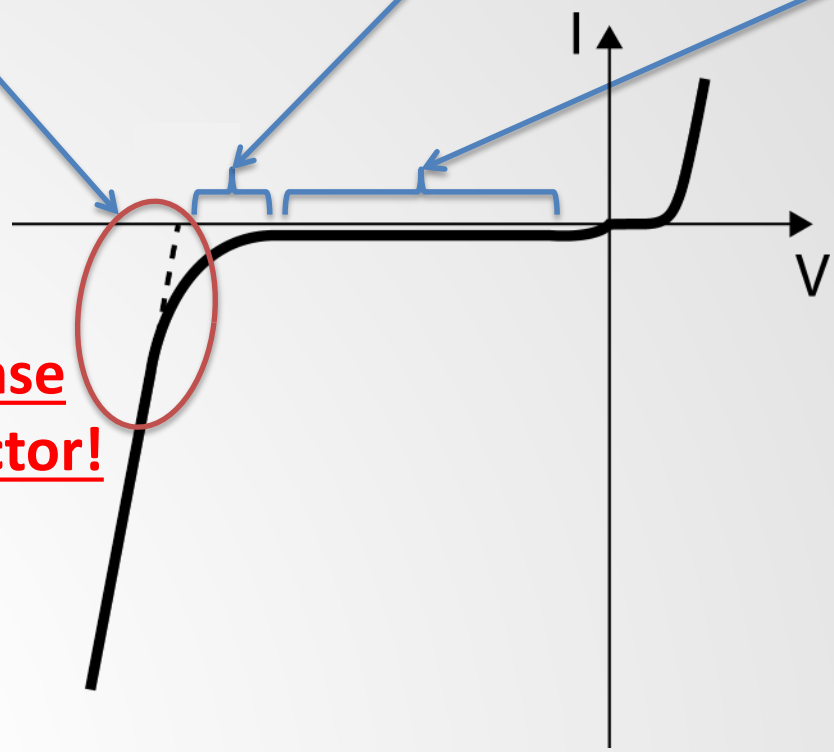

Non linear response
It's a binary detector!

Paradigm shift…

Bottom line, in analog SiPM, we sum binary detectors to get a linear response…

Then, use a preamplifier/transimpedance amplifier + shaper + ADC

to digitize the data… again!

- How to take advantage of the SPAD's digital nature?
- Can power consumption be saved using a digital approach compared to the classic analog readout?

- 3DdSiPM is the "natural" evolution of analog SiPM

Why Go Digital

- No event = no (very low) power
  - Analog readout always "ON"
  - Digital SiPM: power consumption is a function of event rate
- Can disable noisy SPAD to lower noise
- SPAD afterpulsing : reduced by programmable holdoff
  - Important at cryogenic temperature: trap life time ↑
- Calibration paradigm shift
  - Analog SiPM: SPAD-to-SPAD and electronic channels variations, parameters drift with time…
  - Digital: pixel to pixel variation <u>irrelevant → 0 or 1</u>
  - Need to revisit calibration requirement

Proposed Solution for nEXO

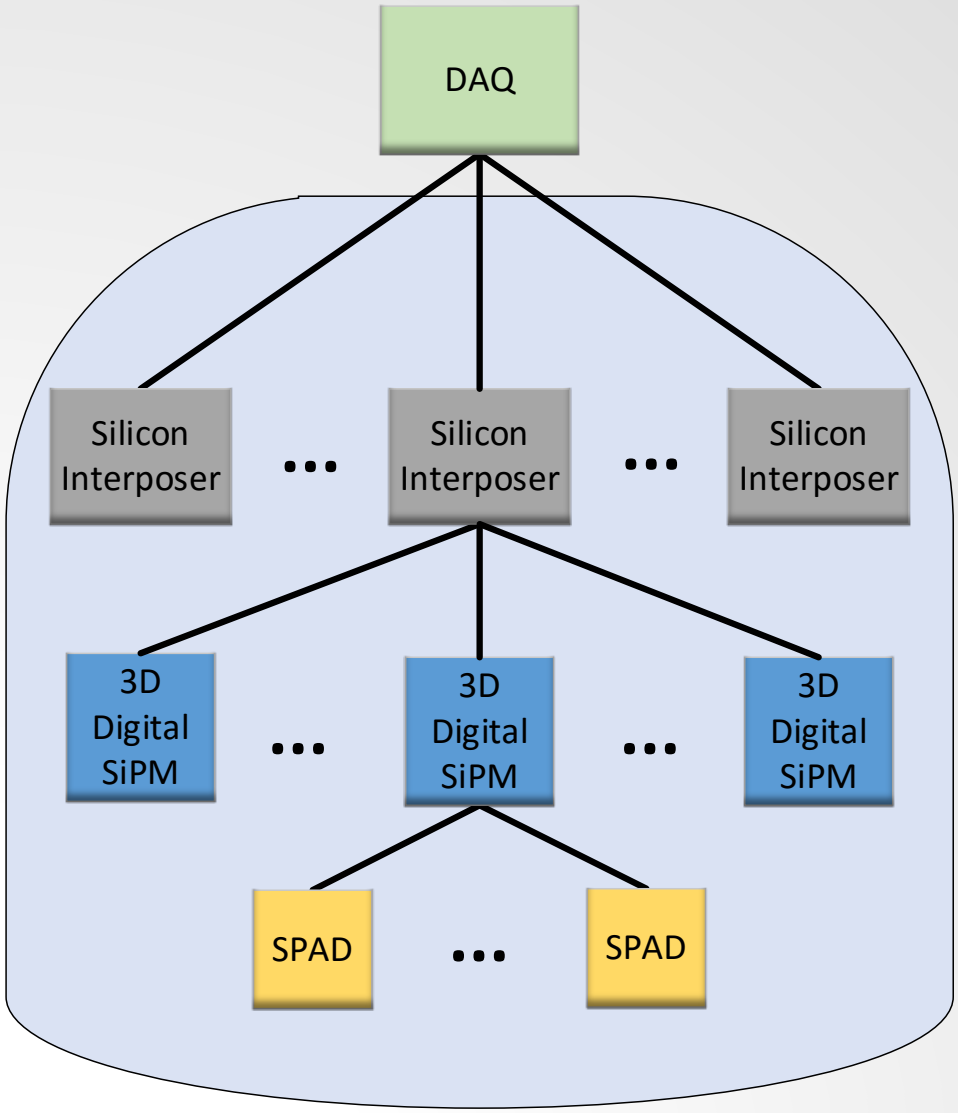

3D digital SiPM:

- 1 cm^2: nEXO resolution
- 40 000 SPADs per 3D digital SiPM
- SPAD: 50 x 50 μm^2
- Total area = 4.096 m^2

Silicon interposer:

- 8 x 12 cm^2
- Commercial CMOS process
- 3D digital SiPM per interposer: 96
- 32 columns x 16 interposers per column around the barrel = 512

DAQ:

- Outside vessel
- FPGA-based

One of the silicon interposer could be used as a hub to minimize the number of feedthroughs. Compromise between electronic power consumption and feedthroughs "heat sink"

3D Digital SiPM Cross-section

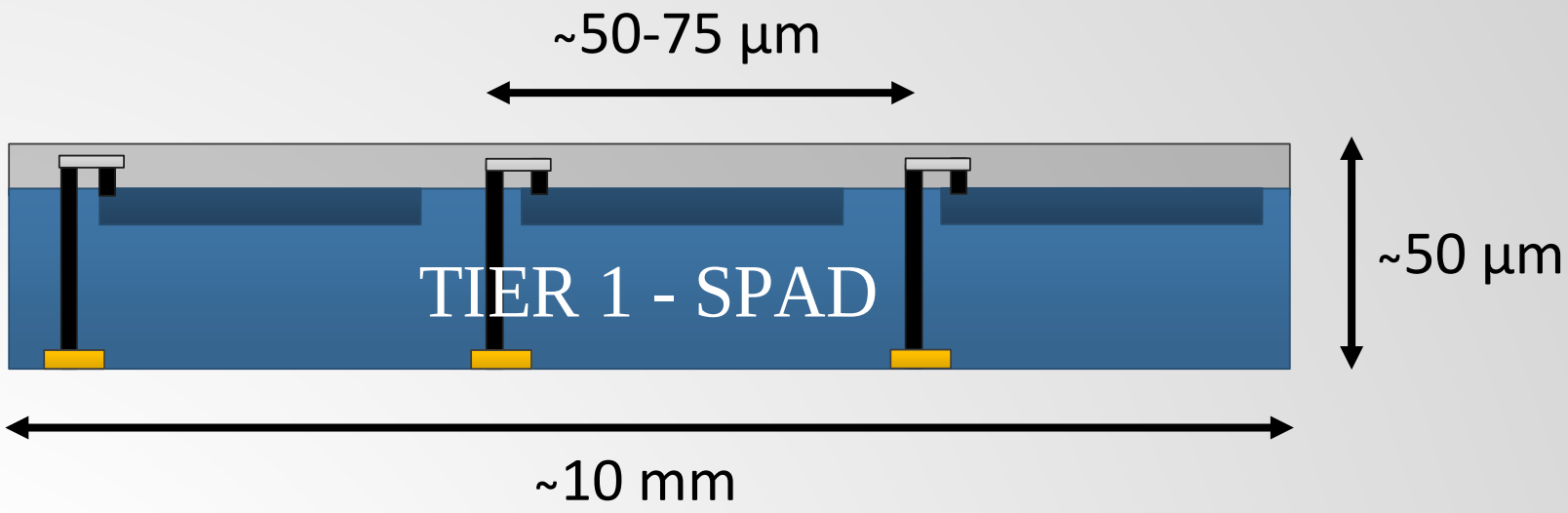

3D Digital SiPM Cross-section

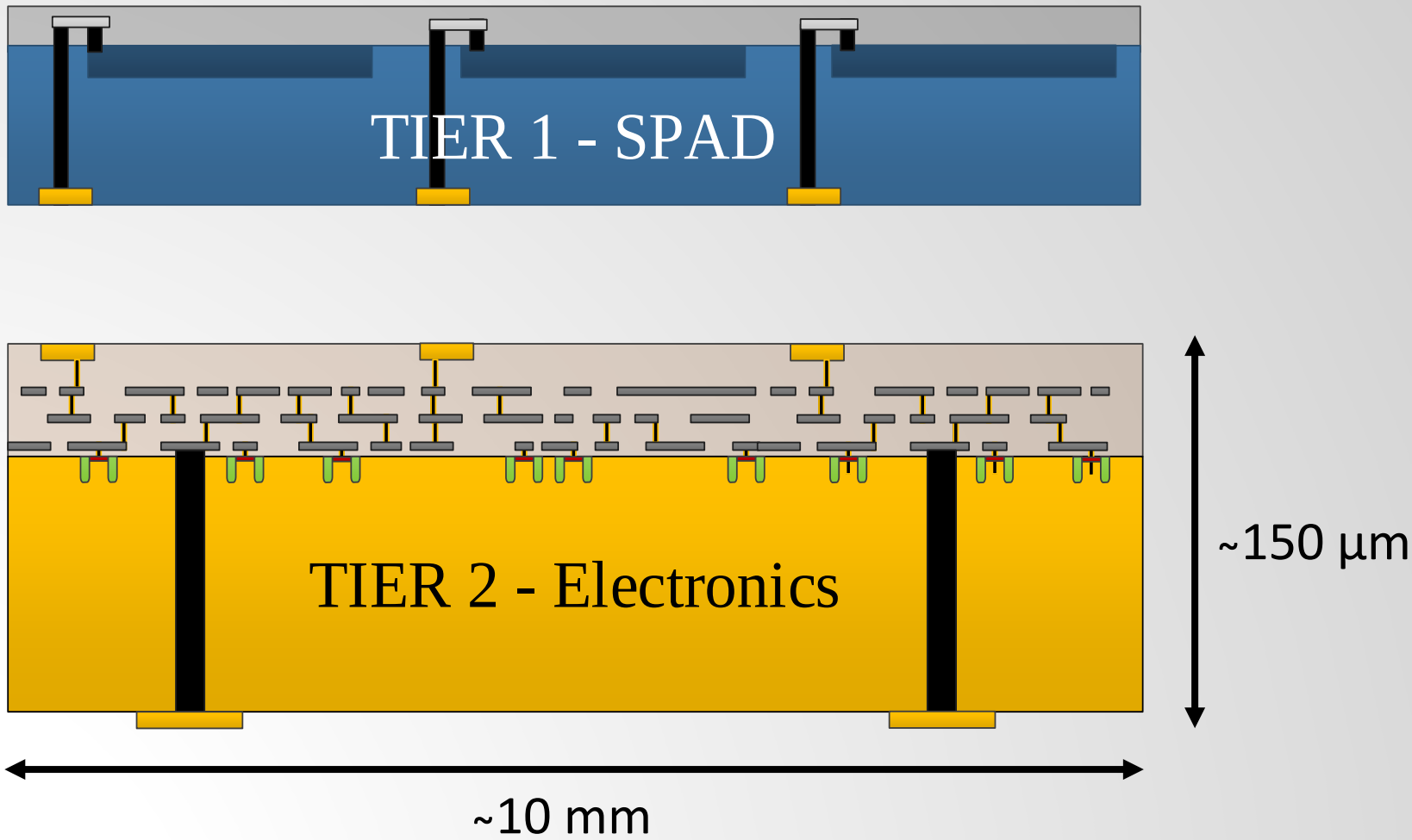

3D Digital SiPM Cross-section

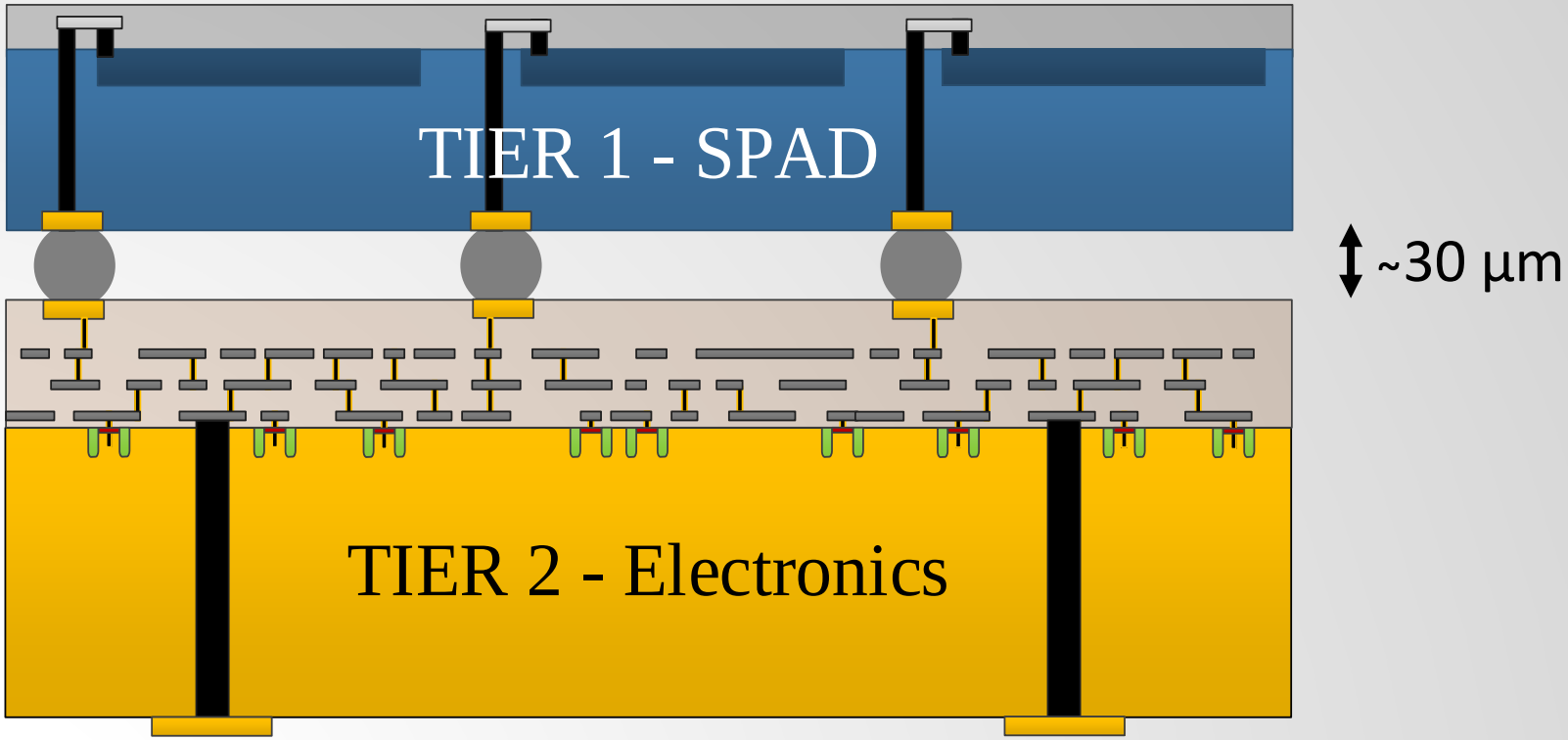

Interposer

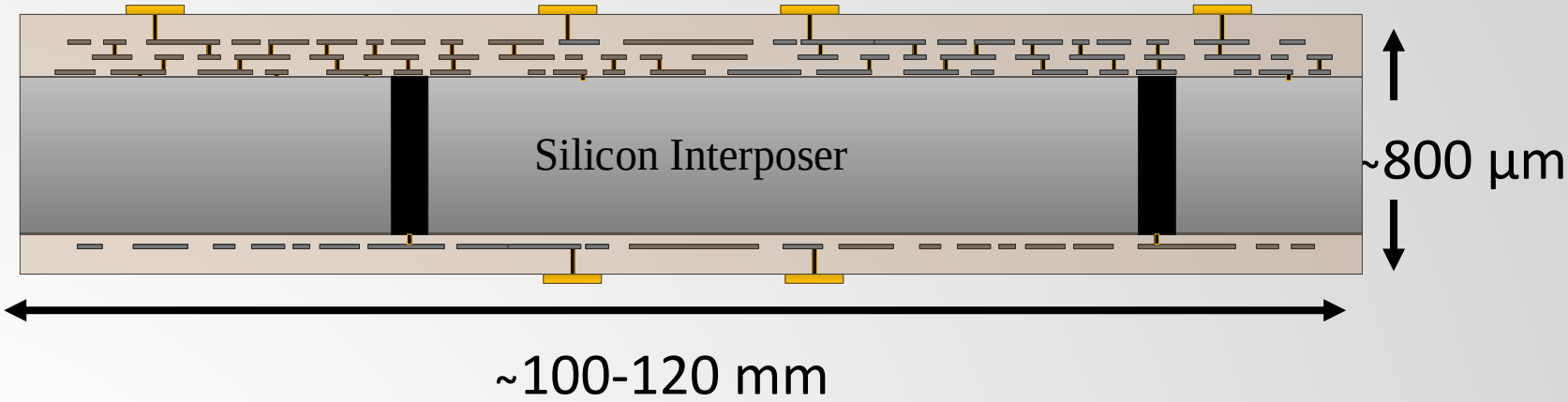

Controler ASIC

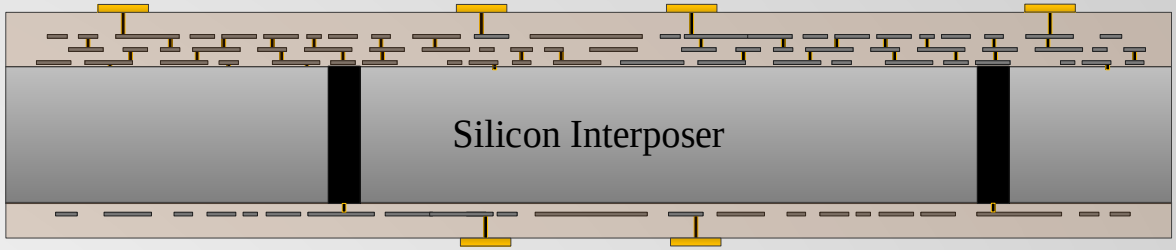

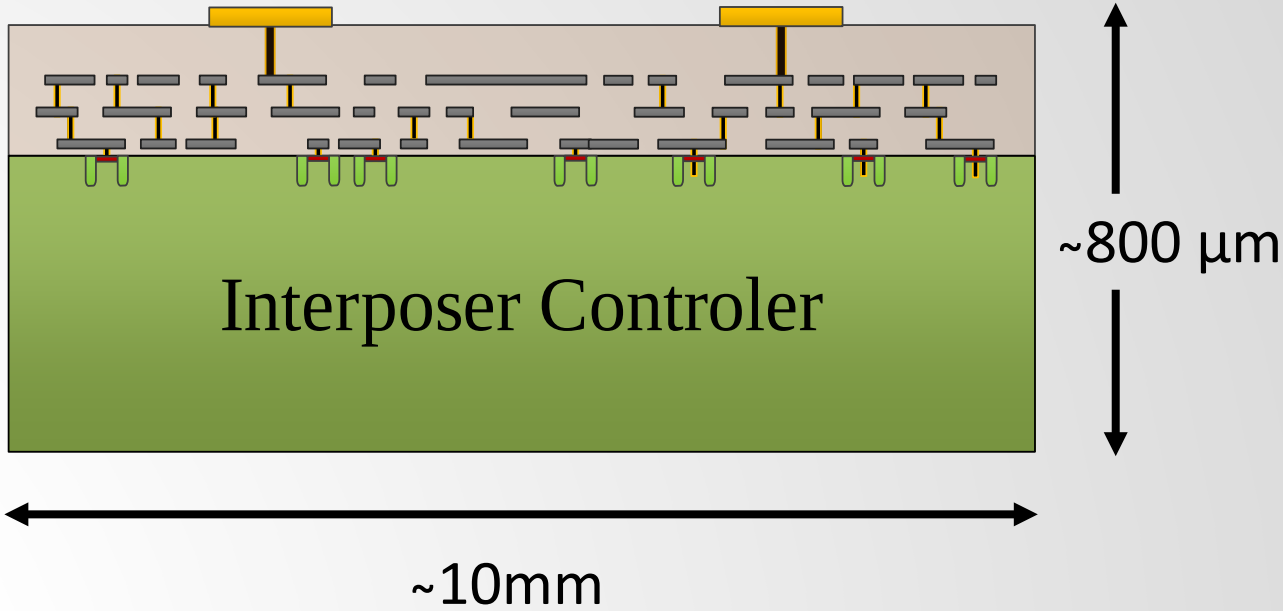

2.5D integration of 3D Digital SiPM on Si interposer

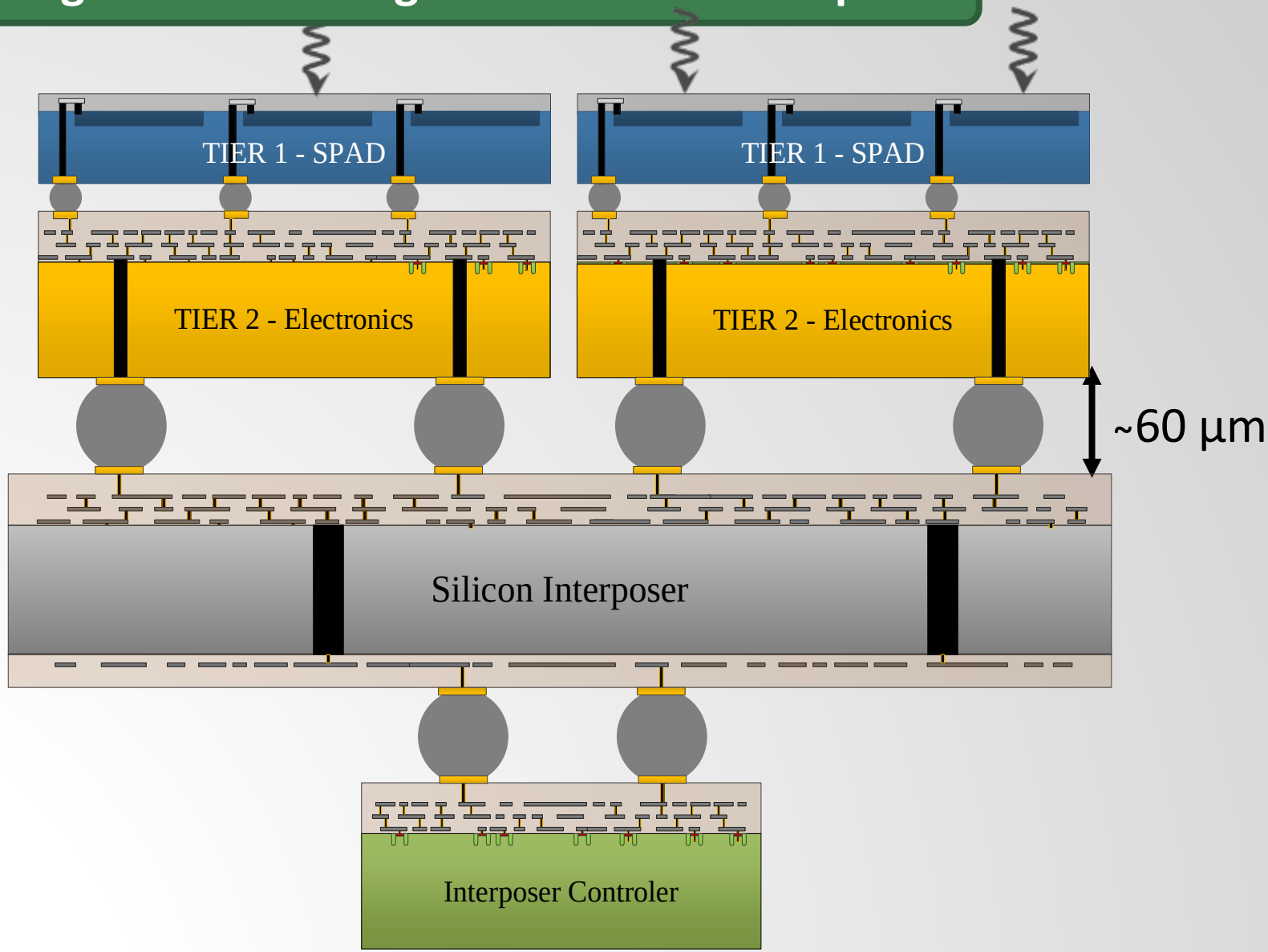

Silicon Interposer

- Advantages of the **Silicon** Interposer:
  - Same Coefficient of Thermal Expansion (CTE)
  - Commercial CMOS process already available (Teledyne DALSA CMOS HV 0.8 µm)
  - Takes advantage of streamlined commercial 2.5D/3D assembly

- www.c2mi.ca
- www.usherbrooke.ca/3it

3DdSiPM Architecture for nEXO

- Wired-OR: Flag to the interposer logic
- Parallel adder provides the number of SPAD fired upon interposer request
- Low power digital asynchronous logic (no clock)

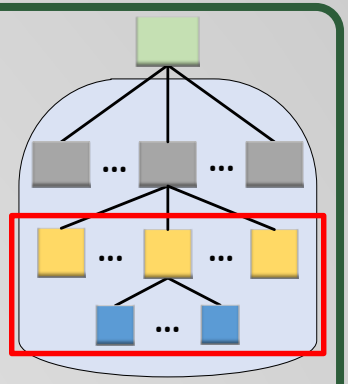

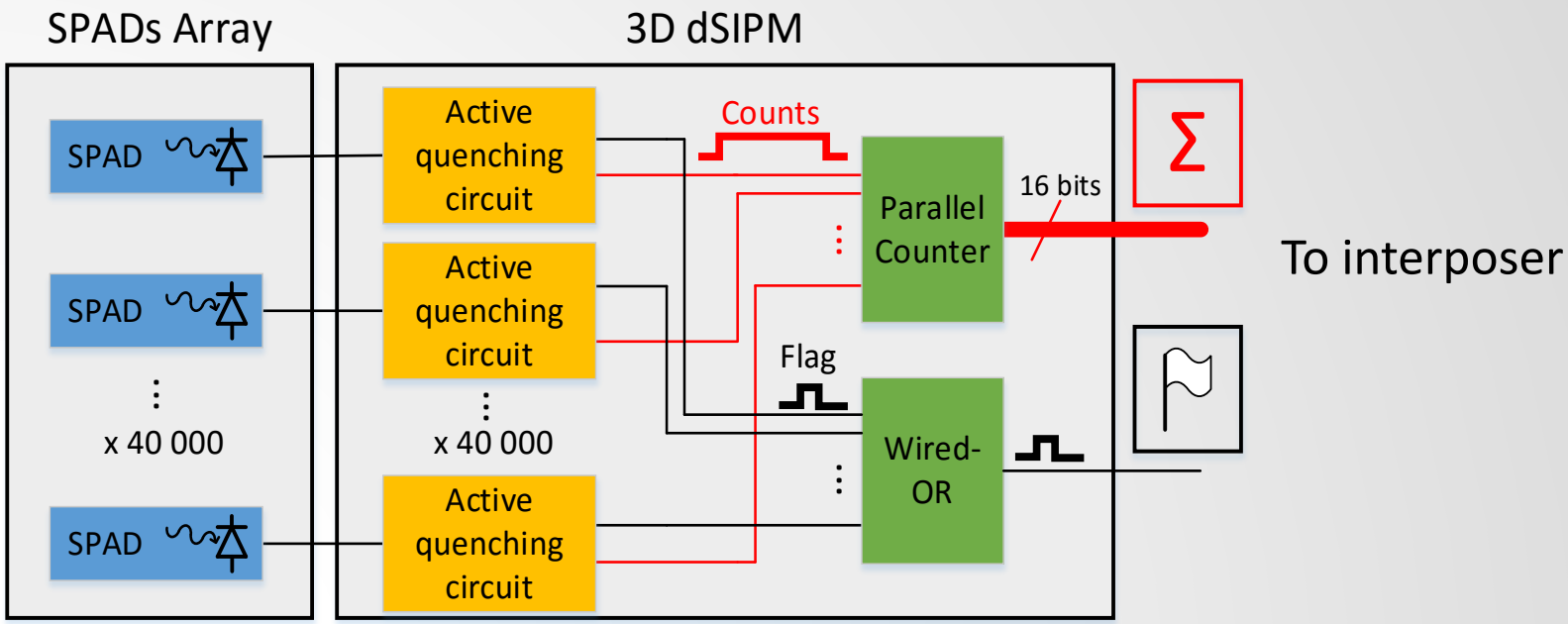

Interposer Architecture: Coincidence and Threshold

SPADs Array
3D dSIPM
SPAD
x 40 000
Active quenching circuit
Counts
Parallel Counter
16 bits
Flag
Wide-Or
Interposer
Signal processing and Communication link
To the DAQ

Interposer

- Adjustable coincidence window
- Adjustable threshold
- A trigger is generated when:
  - Flag count > threshold
  - Inside the coincidence window
- The parallel adder of each 3DdSiPM is activated for the duration of the scintillation
- Data transmission logic

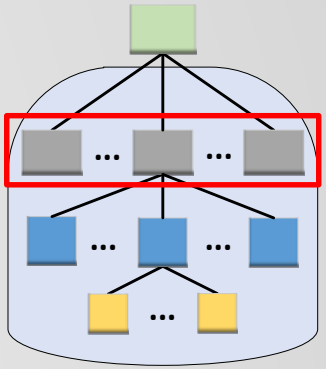

Power consumption of the 3DdSiPM - Preliminary

- The proposed 3DdSiPM has a total area of 1 cm^2 and is composed of three modules.
  - 40 000 quenching circuits to individually quench the SPAD
  - A wired-or for the flag
  - A parallel adder for the sum
- Power consumption of the 3DdSiPM depends on the event rates
  - Power consumption evaluated for a DCR of 5k s^{-1}/cm^2

Consumption per 3DdSiPM (1 cm^2)			
	Static (µW)	Dynamic (µW)	Total (µW)
Quenching circuit (40k)	10	1	11
Wired-OR	0.3	1.3	1.6
Adder	5.2	1E-3	5.2
Total	15.5	2.3	**17.8**

So… for 4 m^2, the digitization cost ~0.7 W!

Power consumption – Interposer level

Further evaluation must be done on the 3DdSiPM and the interposer:

- 3DdSiPM
  - Output buffer to the silicon interposer
- Interposer
  - Communication management
  - Output buffer to the DAQ
  - Logic for the coincidence

<u>All of the above are also required for the analog solution</u>

Conclusion on 3D digital SiPM for nEXO

- Interposer design underway
  - for both analog and digital SiPM
  - Process development required (both side RDL + decoupling cap)
- CMOS readout ASIC design underway (Fab: 12/2016)
- DOE down select 18-24 months
- Construction planned for ~2020
- Operation ~2025

- 3D digital SiPM is a relevant technology for cryogenic instruments
  - Low power consumption
  - No trade off in signal to noise ratio compared to the analog solution
  - Discriminate DCR while preserving 100% of good events
- Technology of interest for other noble liquid and single photon cryogenic detectors

The nEXO Collaboration

University of Alabama, Tuscaloosa AL, USA — T Didberidze, M Hughes, A Piepke, R Tsang

University of Bern, Switzerland — J-L Vuilleumier

Brookhaven National Laboratory, Upton NY, USA — M Chiu, G De Geronimo, S Li, V Radeka, T Rao, G Smith, T Tsang, B Yu

California Institute of Technology, Pasadena CA, USA — P Vogel

Carleton University, Ottawa ON, Canada — I Badhrees, Y Baribeau, M Bowcock, M Dunford, M Facina, R Gornea, K Graham, P Gravelle, R Killick, T Koffas, C Licciardi, K McFarlane, R Schnarr, D Sinclair

Colorado State University, Fort Collins CO, USA — C Chambers, A Craycraft, W Fairbank Jr, T Walton

Drexel University, Philadelphia PA, USA — E Callaghan, MJ Dolinski, YH Lin, E Smith, Y-R Yen

Duke University, Durham NC, USA — PS Barbeau, G Swift

University of Erlangen-Nuremberg, Erlangen, Germany — G Anton, R Bayerlein, J Hoessl, P Hufschmidt, A Jamil, T Michel, T Ziegler

IBS Center for Underground Physics, Daejeon, South Korea — DS Leonard

IHEP Beijing, People's Republic of China — G Cao, W Cen, X Jiang, H Li, Z Ning, X Sun, T Tolba, W Wei, L Wen, W Wu, J Zhao

ITEP Moscow, Russia — V Belov, A Burenkov, A Karelin, A Kobyakin, A Kuchenkov, V Stekhanov, O Zeldovich

University of Illinois, Urbana-Champaign IL, USA — D Beck, M Coon, S Li, L Yang

Indiana University, Bloomington IN, USA — JB Albert, S Daugherty, TN Johnson, LJ Kaufman, G Visser, J Zettlemoyer

University of California, Irvine, Irvine CA, USA — M Moe

Laurentian University, Sudbury ON, Canada — B Cleveland, A Der Mesrobian-Kabakian, J Farine, U Wichoski

Lawrence Livermore National Laboratory, Livermore CA, USA — O Alford, J Brodsky, M Heffner, G Holtmeier, A House, M Johnson, S Sangiorgio

University of Massachusetts, Amherst MA, USA —S Feyzbakhsh, S Johnston, M Negus, A Pocar

McGill University, Montreal QC, Canada — T Brunner , K Murray

Oak Ridge National Laboratory, Oak Ridge TN, USA — L Fabris, D Hornback, RJ Newby, K Ziock

Pacific Northwest National Laboratory, Richland, WA, USA — EW Hoppe, JL Orrell

Rensselaer Polytechnic Institute, Troy NY, USA — E Brown, K Odgers

Université de Sherbrooke — S Charlebois, D Danovitch, R Fontaine, JF Pratte, J Sylvestre, F Bourque, T Rossignol, S Parent, M Côté, F Vachon, F Nolet, H Dautet

SLAC National Accelerator Laboratory, Menlo Park CA, USA — J Dalmasson, T Daniels, S Delaquis, G Haller, R Herbst, M Kwiatkowski, A Odian, M Oriunno, B Mong, PC Rowson, K Skarpaas

University of South Dakota, Vermillion SD, USA — J Daughhetee, R MacLellan

Stanford University, Stanford CA, USA — R DeVoe, D Fudenberg, G Gratta, M Jewell, S Kravitz, D Moore, I Ostrovskiy, A Schubert, M Weber

Stony Brook University, SUNY, Stony Brook, NY, USA — K Kumar, O Njoya, M Tarka

Technical University of Munich, Garching, Germany — P Fierlinger, M Marino

TRIUMF, Vancouver BC, Canada — J Dilling, P Gumplinger, R Krücken, F Retière, V Strickland

FINALLY! SHERBROOKE HAS WORKING 3D DIGITAL SIPM!

The 3D digital SiPM for nEXO

Jean-François Pratte

Frédéric Bourque, Tommy Rossignol, Xavier Bernard, Samuel Parent, Vincent Philippe Rhéaume, Maxime Côté, Luc Maurais, Frédéric Nolet, Thomas Dequivre, Elias Al Alam, Réjean Fontaine, David Danovitch, Julien Sylvestre, Serge Charlebois

Institut Interdisciplinaire d'Innovation Technologique (3IT), Université de Sherbrooke

Front-End Electronics 2016
AGH University of Science and Technology
Krakov, Poland
May 31th – June 3rd 2016

UNIVERSITÉ DE SHERBROOKE

GRAMS

Scanning Electron Microscope Image

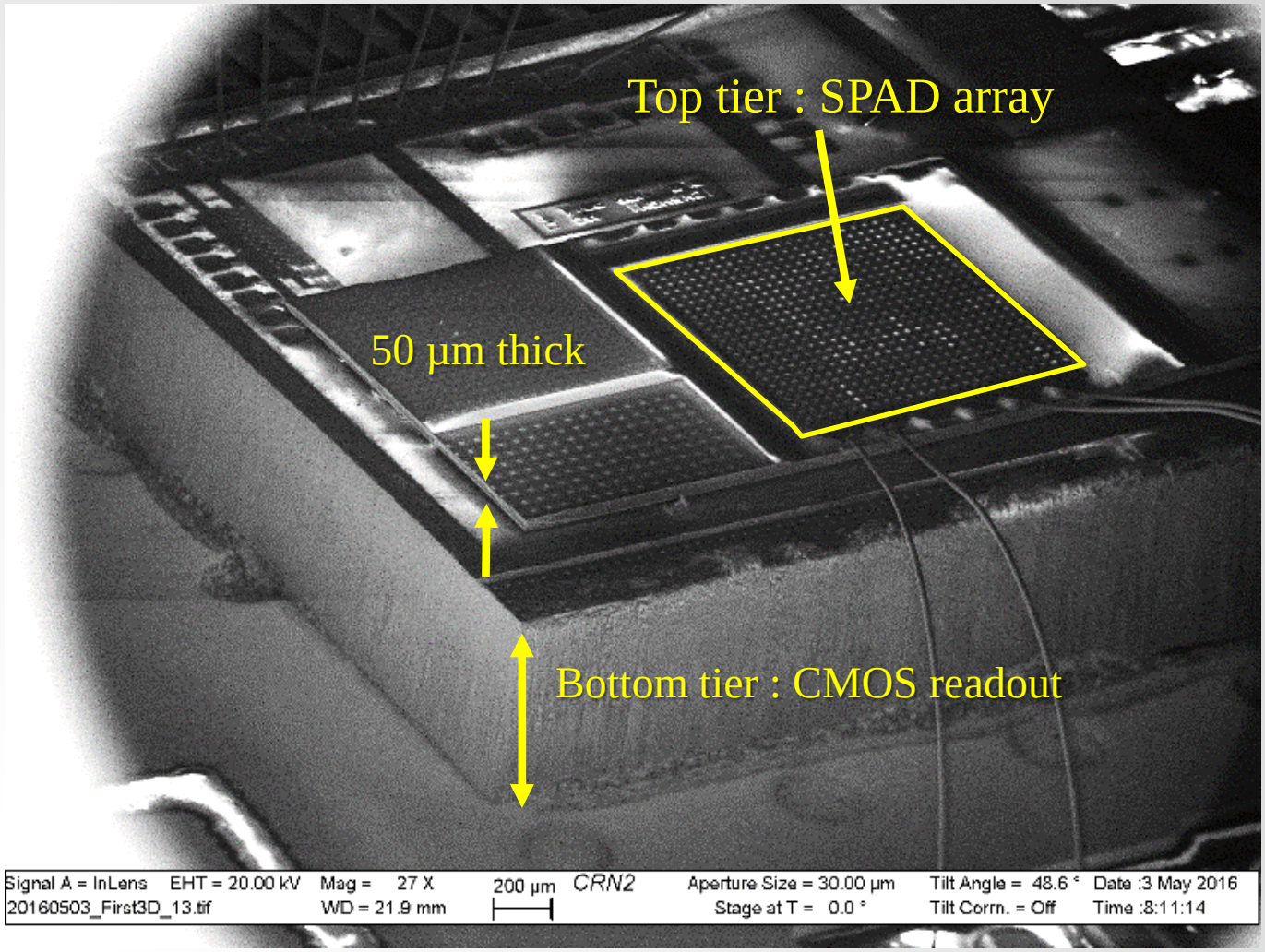

3D digital SiPM Proof of Concept Architecture

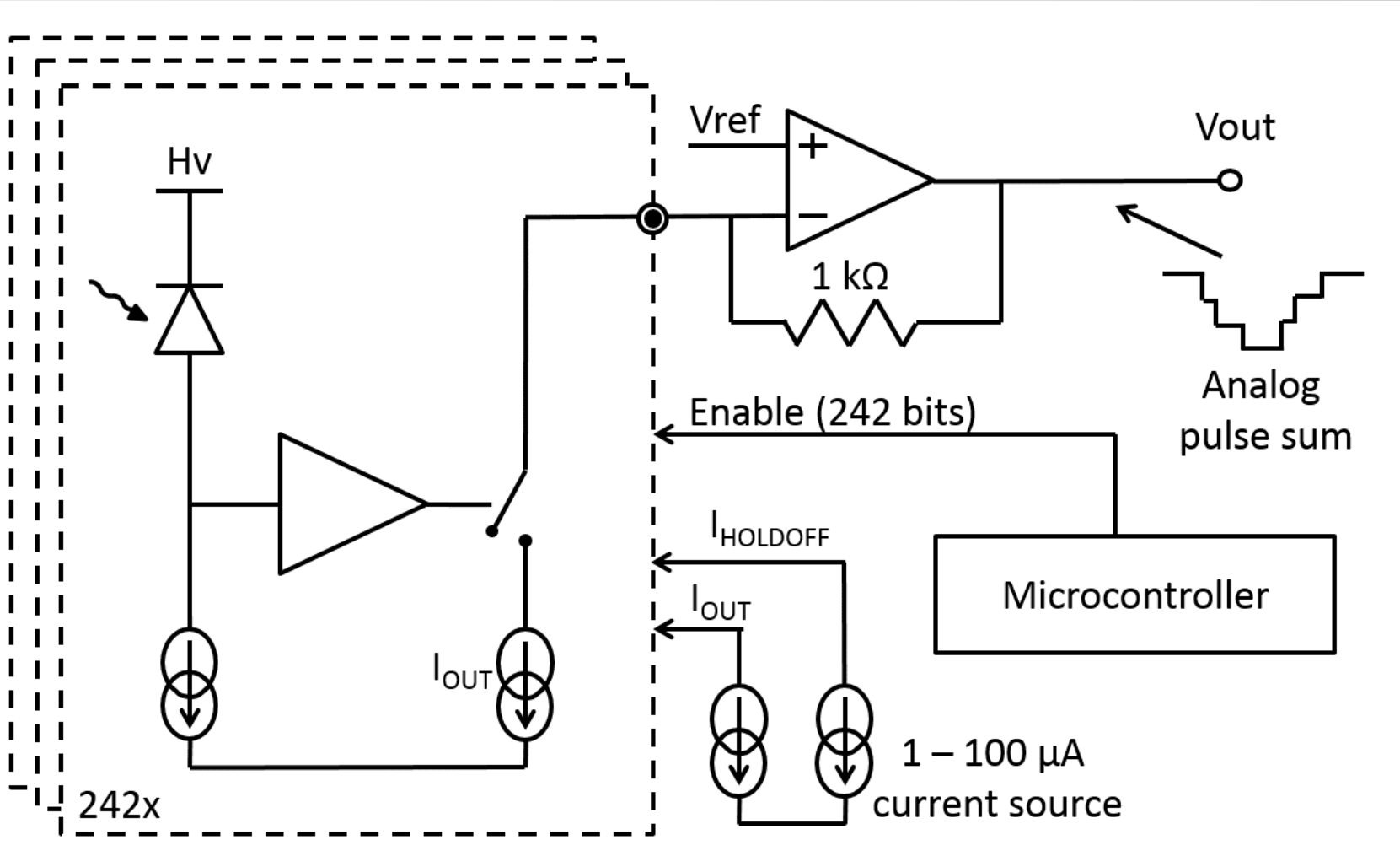

Fig. 1. Block diagram of the 3DdSiPM. In the dashed box: the 3DdSiPM. Outside the dashed box: PCB.

It works!

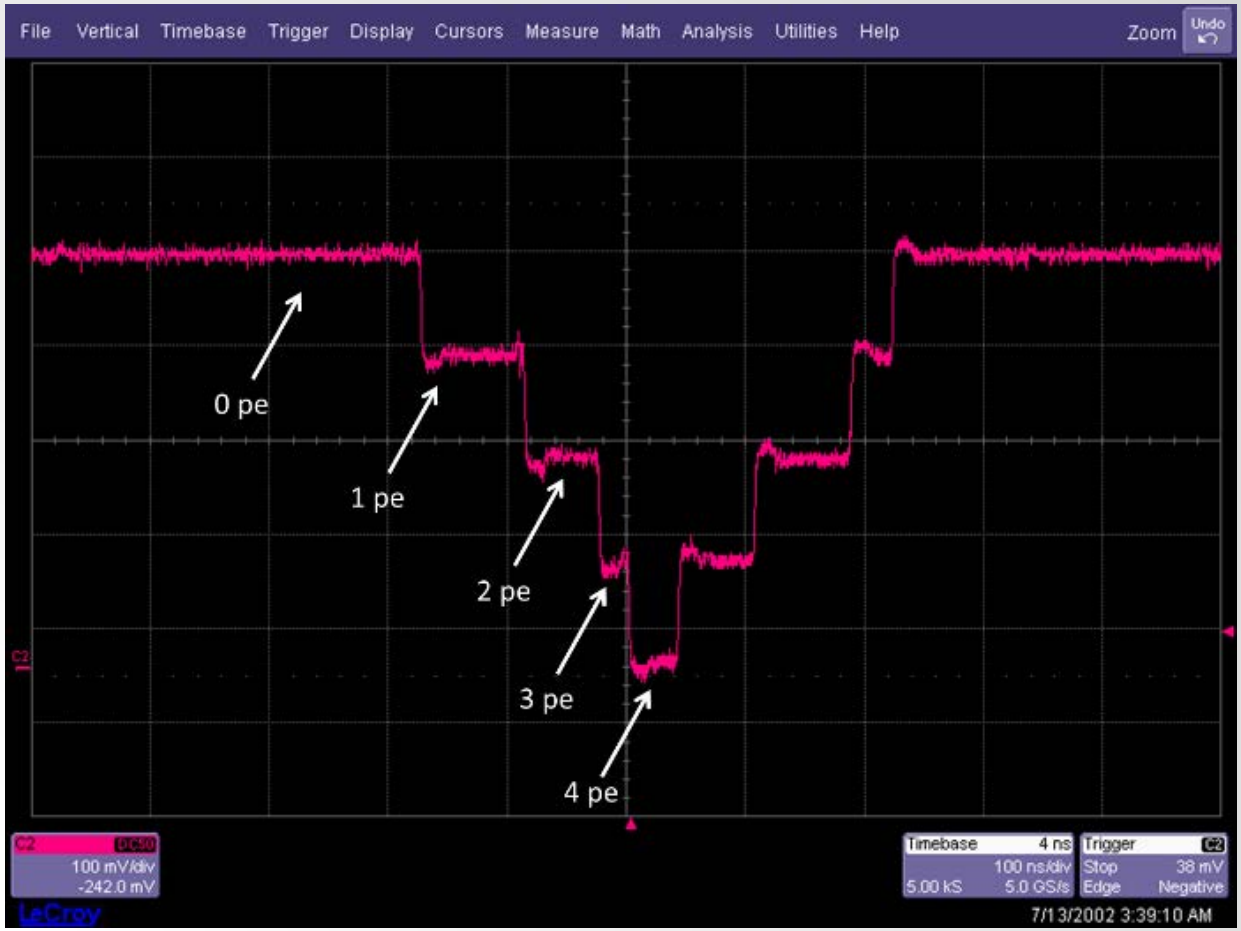

X-Ray Image

Output Signal Histogram

- Pulsed laser, two intensities.

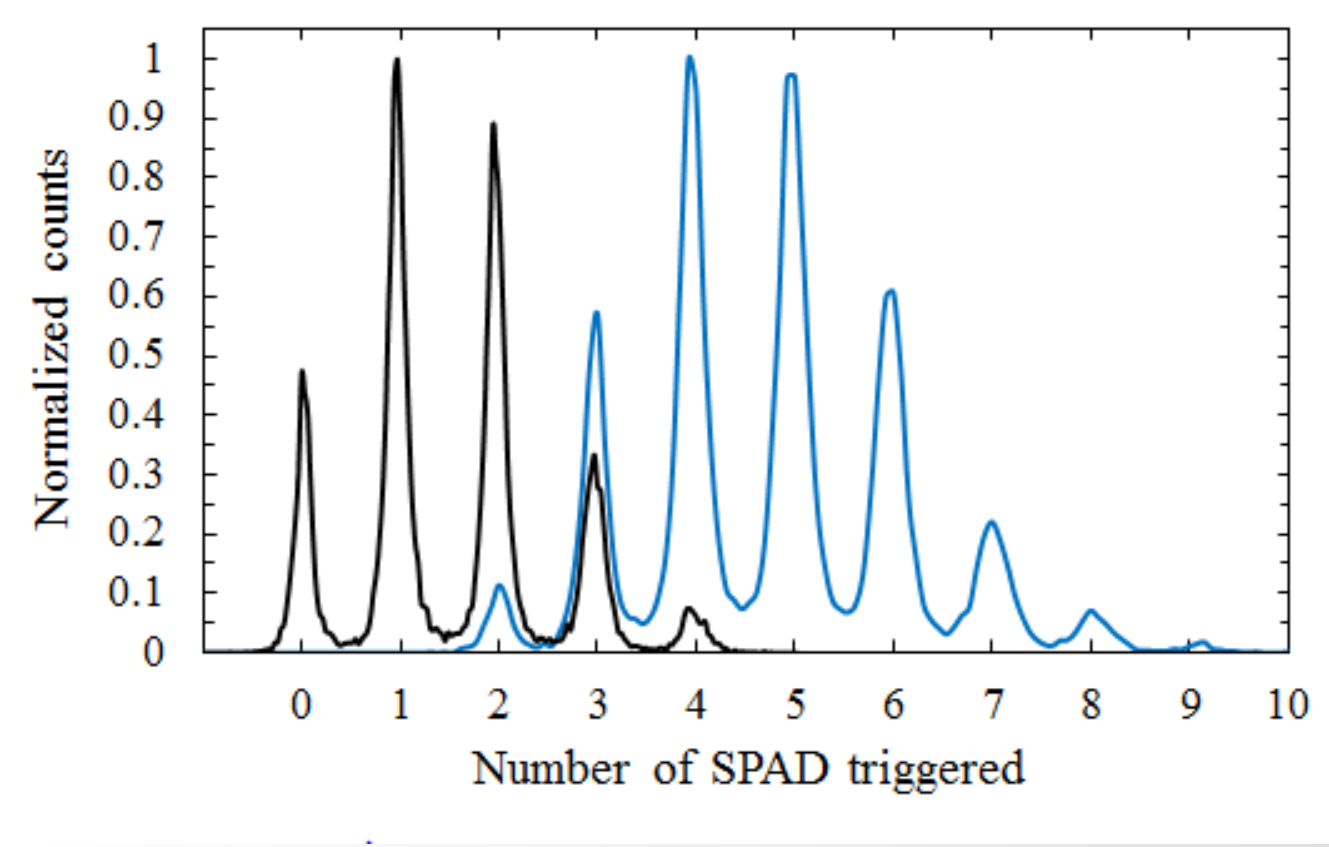

Issues

- Through Silicon Via backside isolation with substrate
- Under bump metallization connection to TSV end cap (Ti/Cu interface)
- …

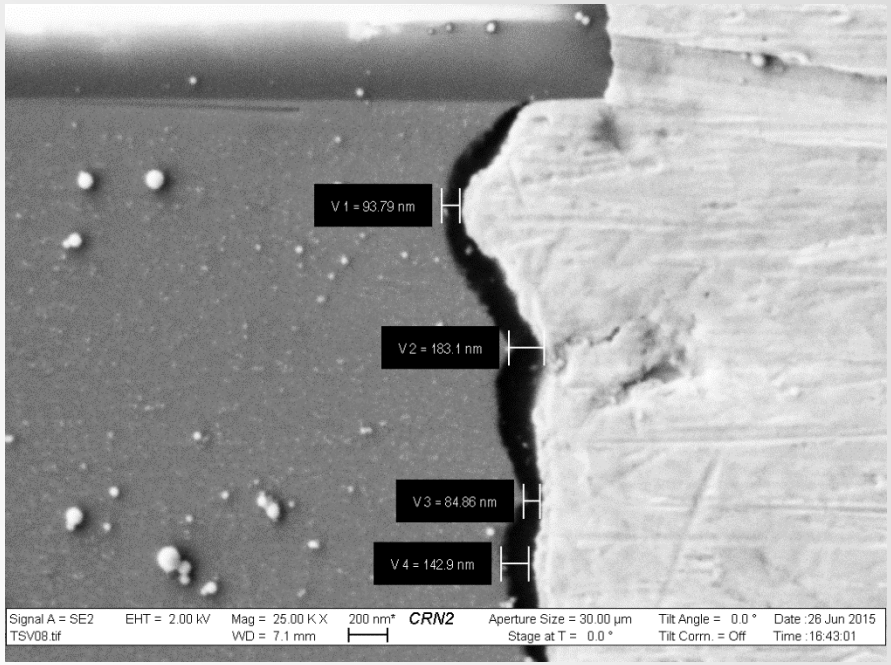

➢ 3D integration process related: will not be an issue when process moved to C2MI

3D dSiPM Proof of Concept: Check!

- Our « in-house » 3D process enabled us to learn a lot and achieve the proof of concept
- Not suited for large scale production (we knew!... But that's what we could afford)
- Now that the proof of concept is done, its time to scale the process @ C2MI (www.c2mi.ca)
  - Require R&D

Thank you!

THANK YOU!

see you in Québec for FEE2018!

www.jouvence.com

GEANT 4 nEXO Simulation (Guofu Cao)

- Studies of scintillation events detection and the reduction of dark counts:
  - Cluster size (# dSiPM): 1, 2 x 2, 4 x 4, 4 x 10
  - SiPM size in simulation: 1.37 x 1.37 cm^2
  - PDE: 5%, 15%, 20%
  - DCR: 50, 100, 150 s^{-1}/mm^2

- 1330 0νββ events were considered
  - Within 0.6 m radius of the center point

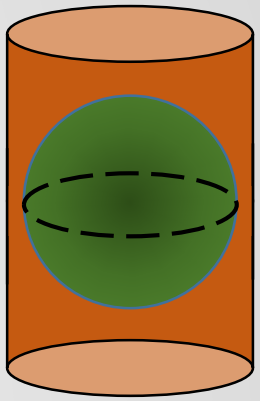

GEANT4 Data Analysis: results

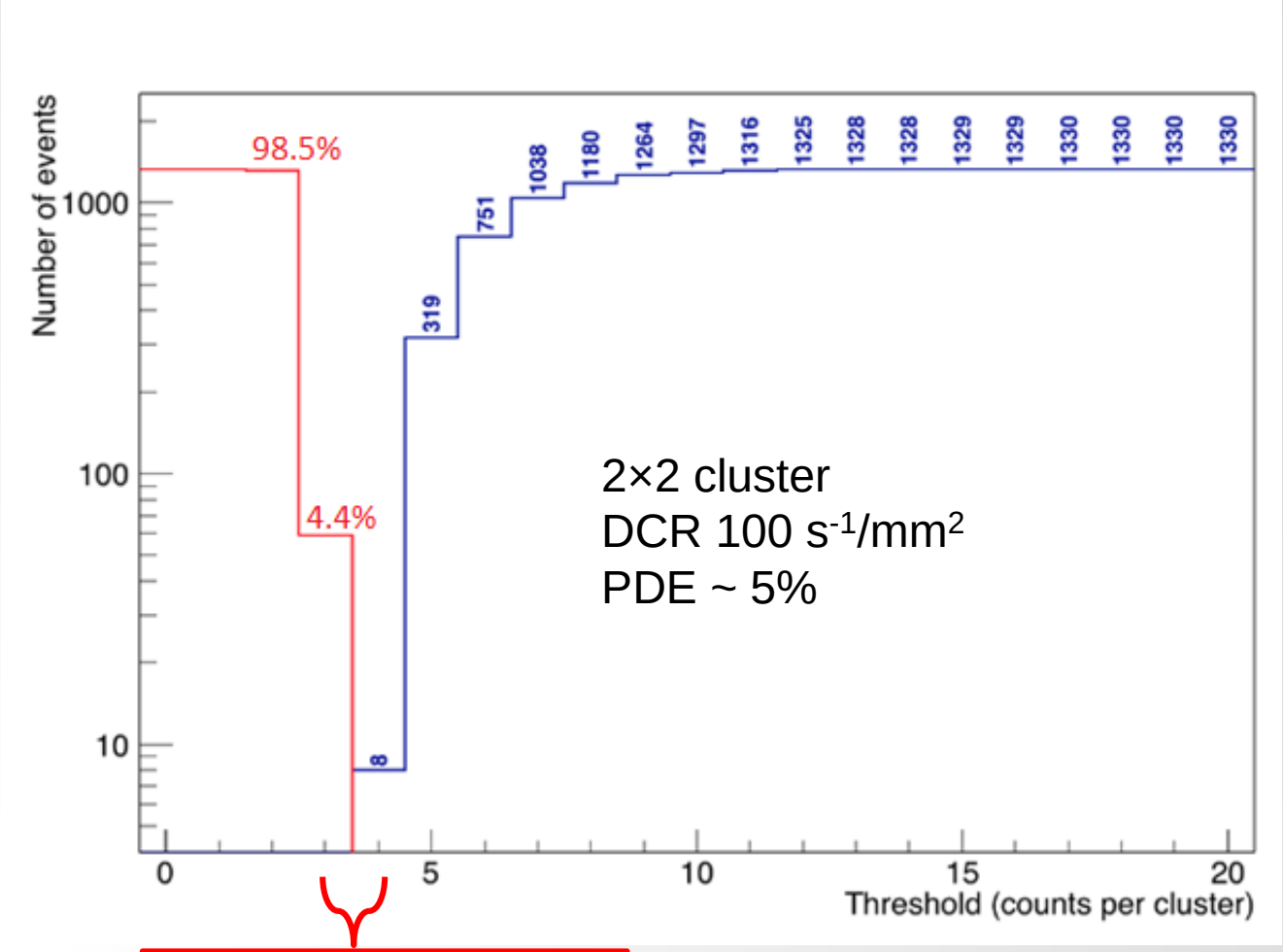

No threshold margin

GEANT4 Data Analysis: Missed Events

Blue curve: The number of missed events for a threshold value

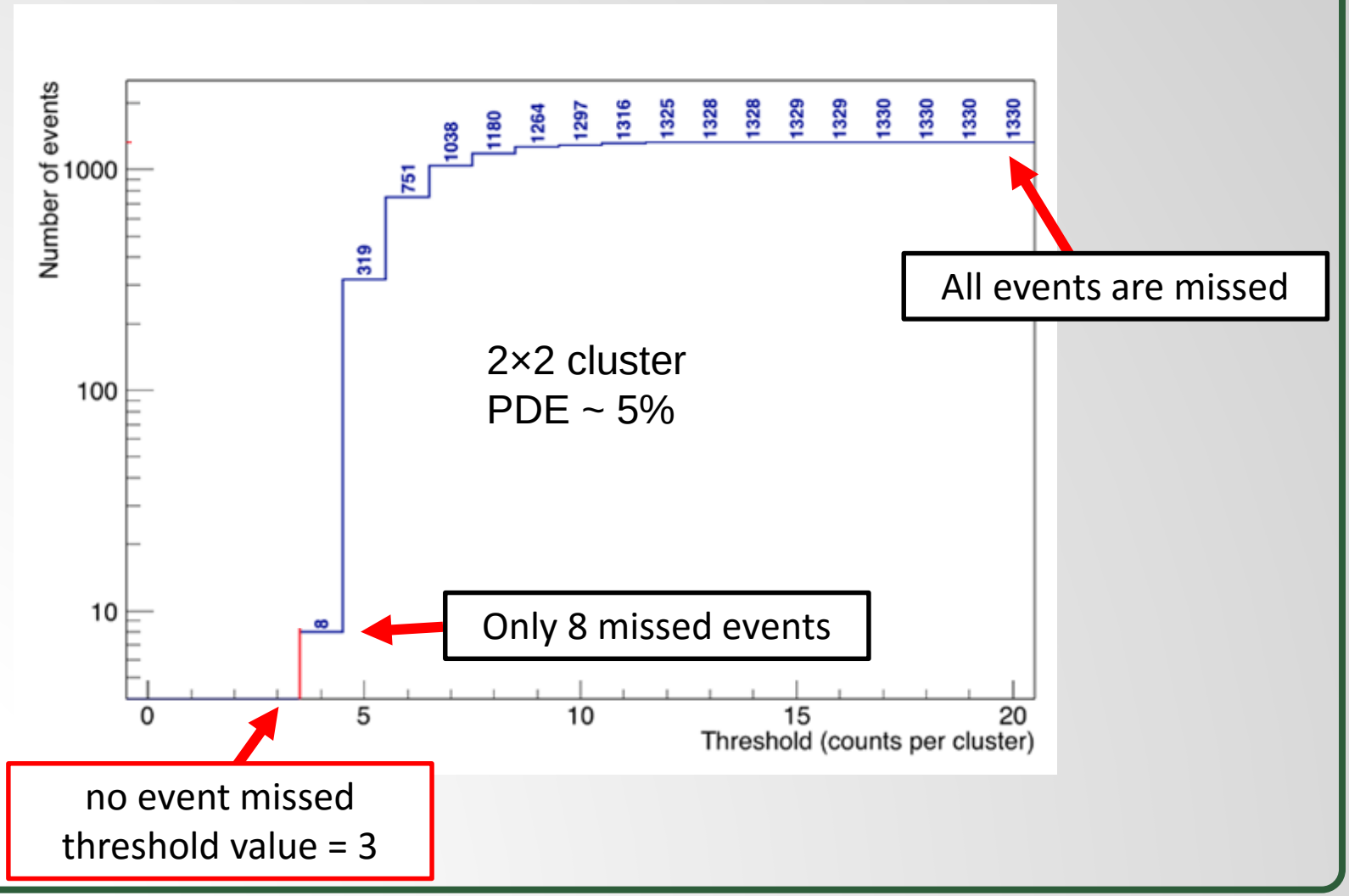

GEANT4 Data Analysis : Effective DCR

Red curve: The effective DCR

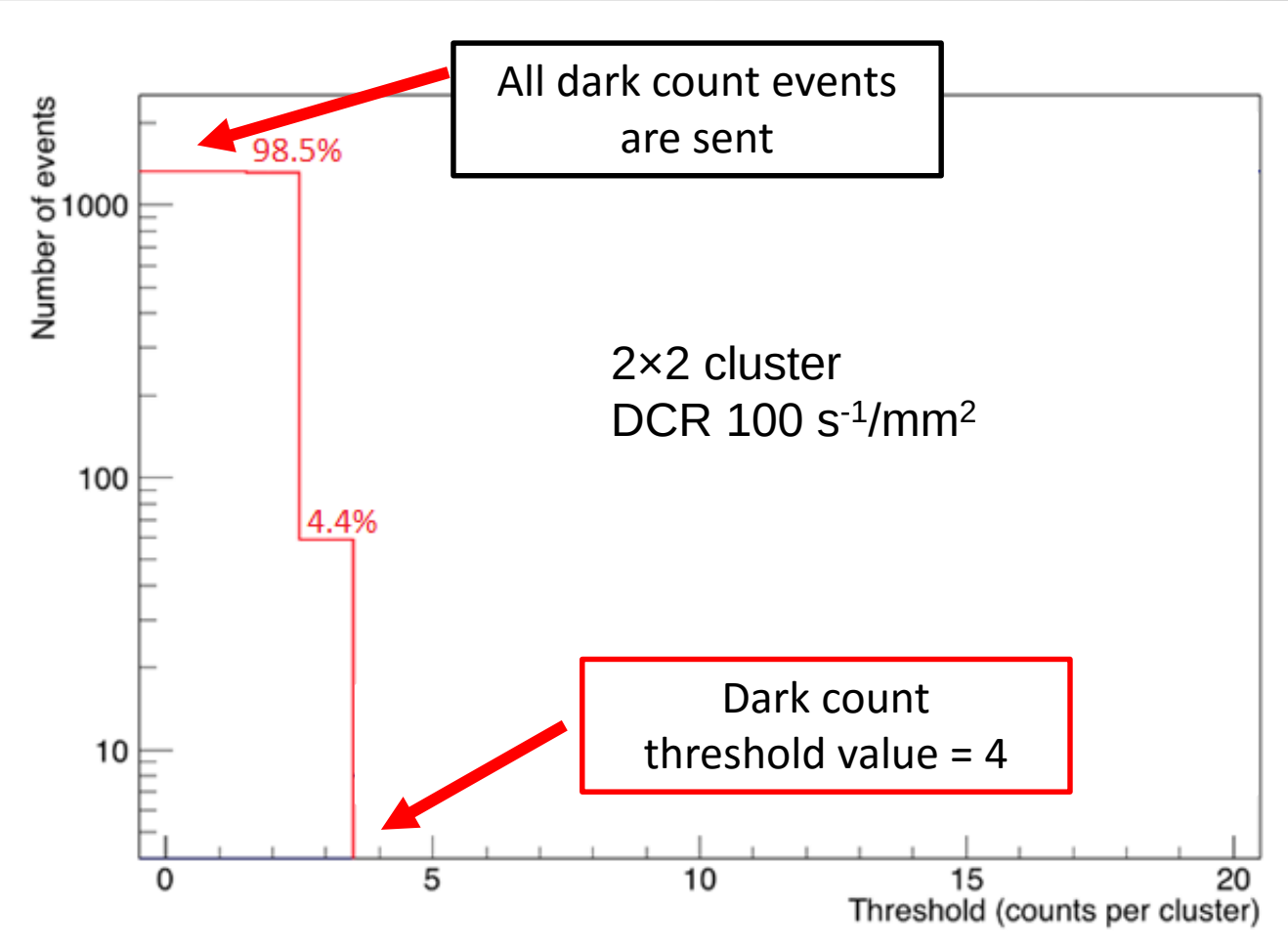

GEANT4 Data Analysis: Combined results

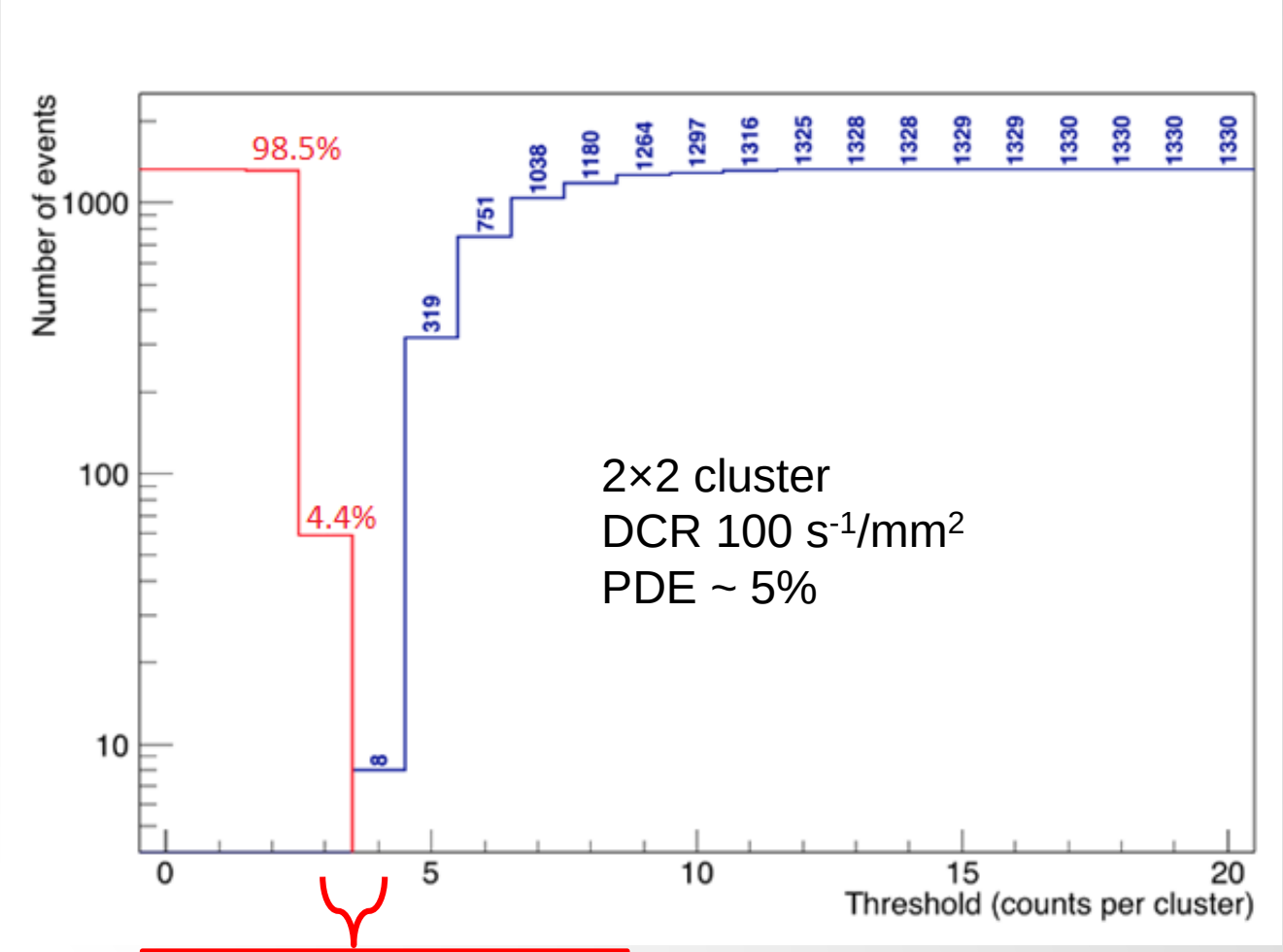

No threshold margin

Trigger Scheme : DCR Variation

- Cluster of 4x4 (~27 cm²)
- PDE of 5 %

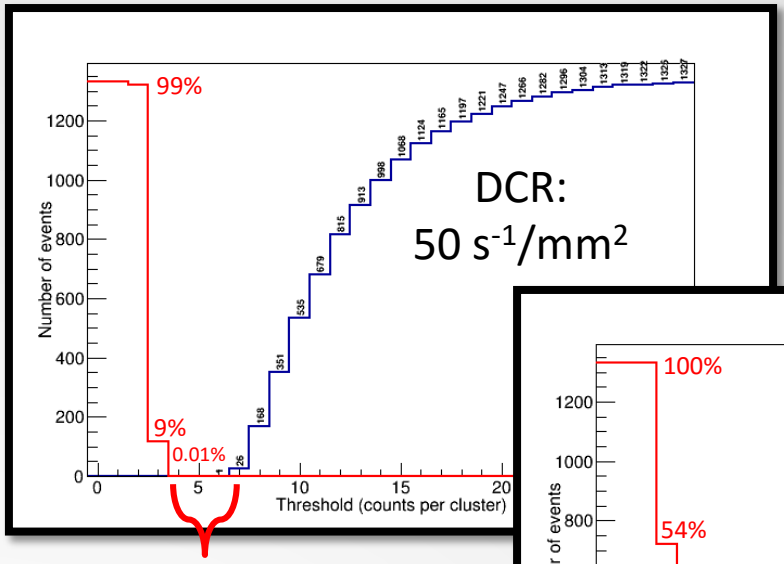

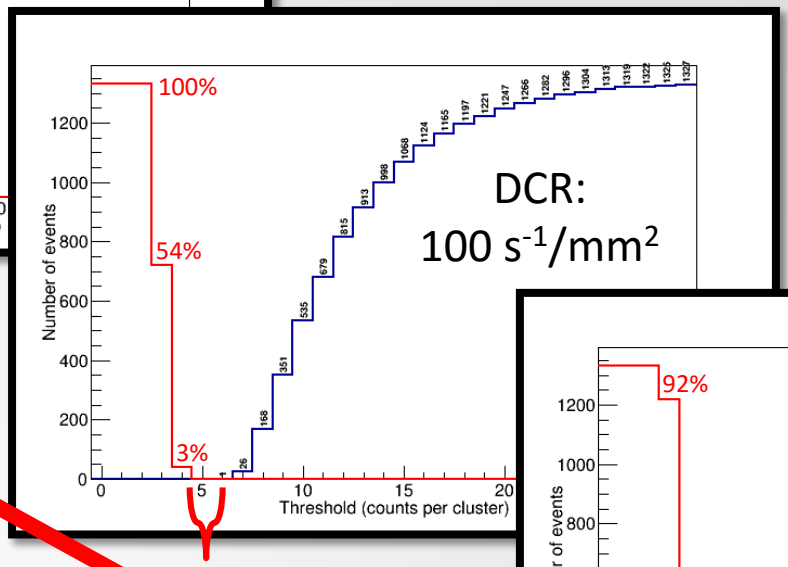

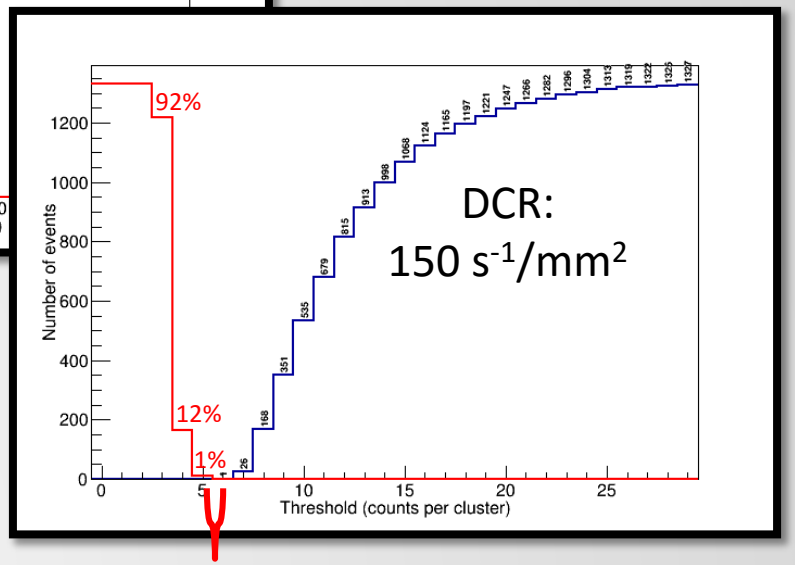

Threshold Margin Reduction with increased DCR

Trigger Scheme : PDE Variation

- Cluster of 4x4 (~27 cm²)
- DCR of 50 s^{-1}/mm^2

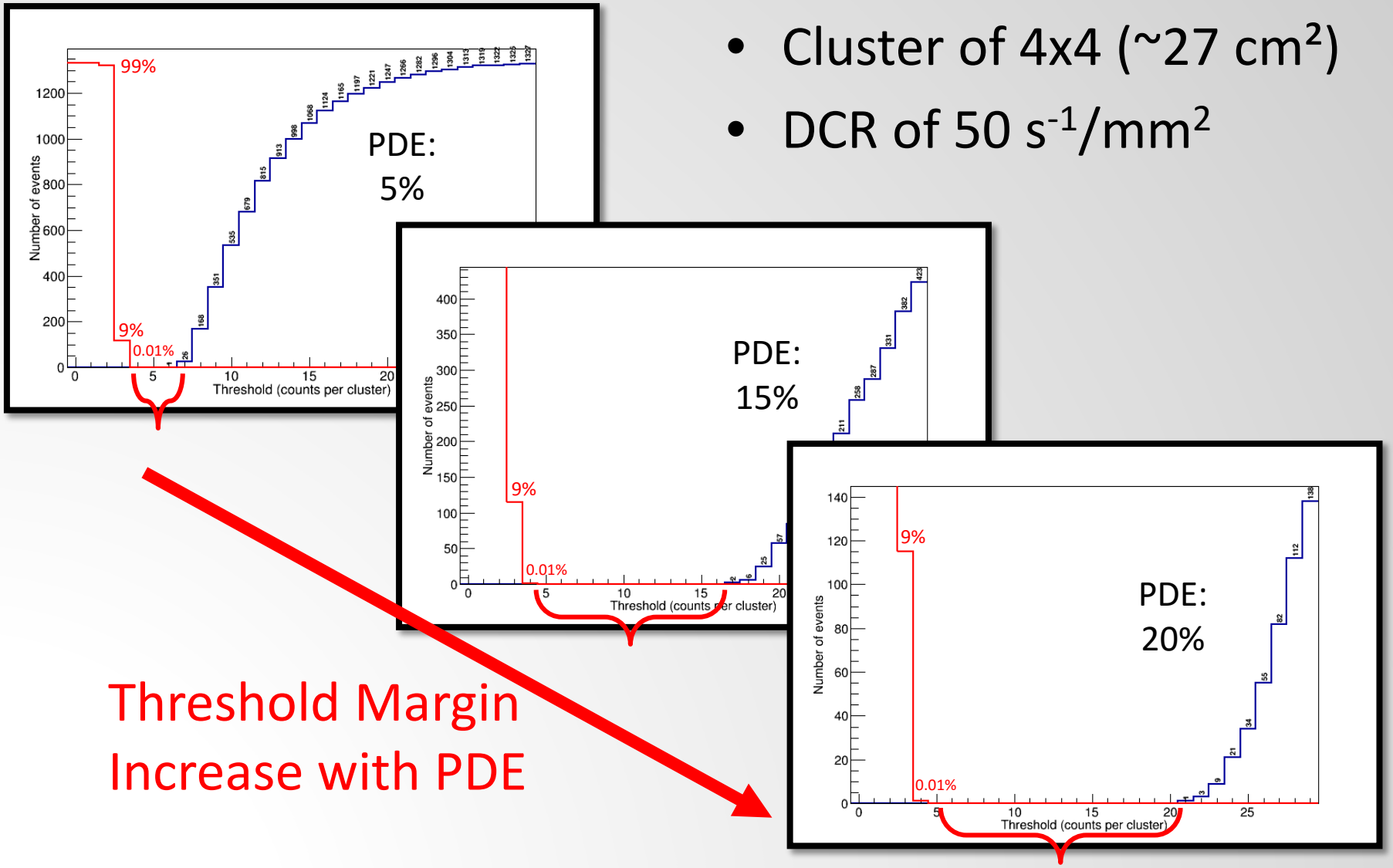

Threshold Margin Increase with PDE

Trigger Scheme : Cluster Size

- DCR of 50 s^{-1}/mm^2
- PDE of 20 %

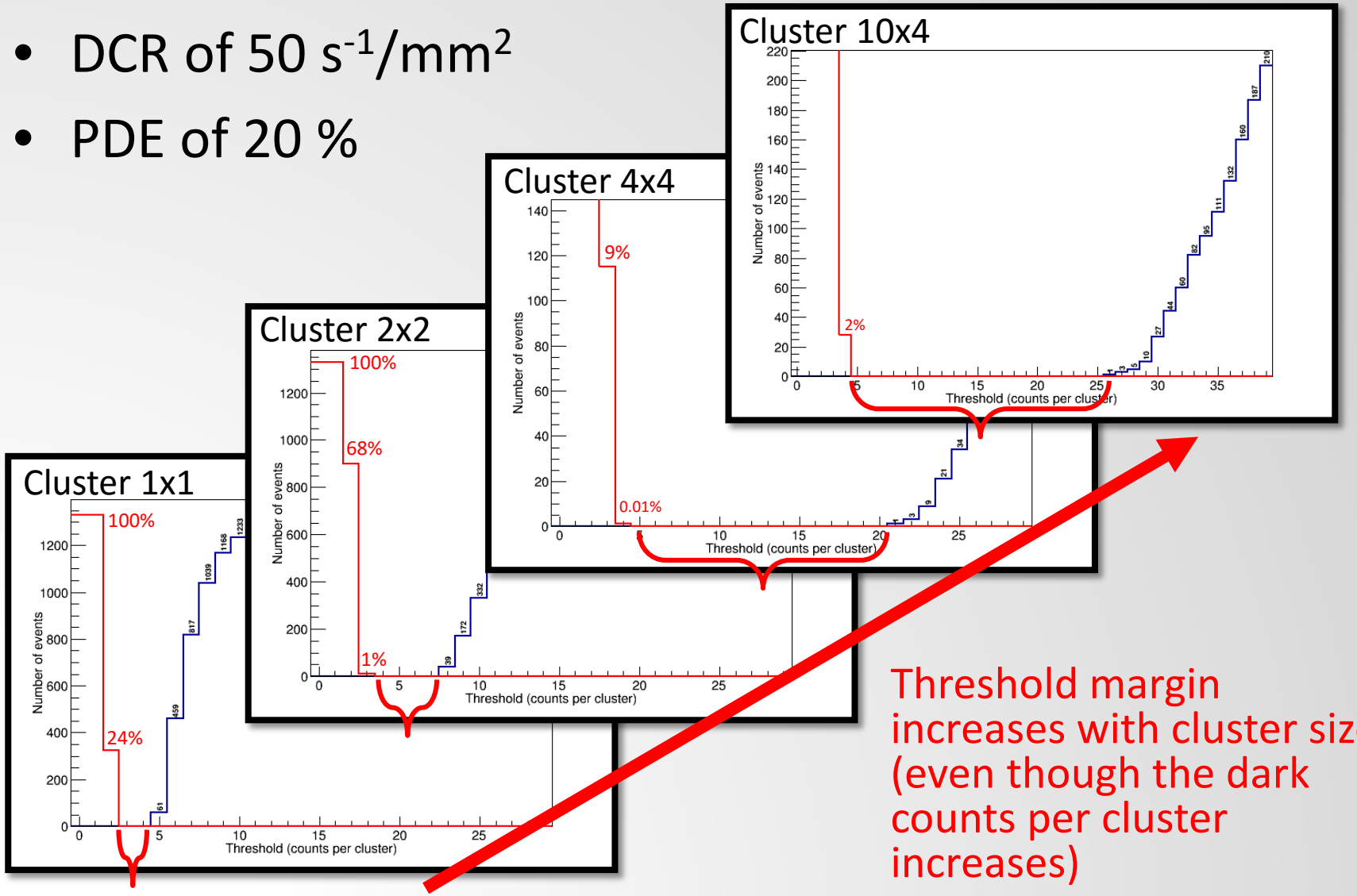

Threshold margin increases with cluster size (even though the dark counts per cluster increases)

Power comsumption

- Using SiPM, ~ 5mW static consumption per 5 cm^2 SiPM (~ 1mW/cm^2)
  - Includes the front-end, shaper, peak/hold and the coincidence logic
  - Ref L. Fabris et al, "Concepts of SiPM readout electronics", NSS/MIC 2014
- Power consumption of the 3D Digital SiPM depends on the event rates
- The proposed 3DdSiPM has a total area of 1 cm^2 and is composed of three modules.
  - 40 000 quenching circuits to individually quench the SPAD
  - A wired-or for the flag propagation
  - A parallel counter for the sum
- The 40 000 QC consumption is:
  - Static: ~ 10 uW
  - Per hit: ~ 300 fC
- The wired-or
  - Static: ~ 10 uW
  - Per Flag: ~ 300 fC
- The parallel counter:
  - Static: ~ 10 uW
  - Per hit: ~ 300 fC

Interdisciplinary Institute for Technological Innovation

Interdisciplinary Institute for Technological Innovation
3IT

The 3IT provides academic and industrial partners with an dynamic, flexible, cross-cutting and translational ecosystem for research and innovation.

MiQro Innovation Collaborative Center (C2MI)

UNIVERSITÉ DE SHERBROOKE

DALSA

IBM Usine de Bromont

Investment: 218 M$ + 135 M$

Cleanroom size: 5300 m^2

Research areas:

Packaging

Testing of complex microsystems

3D integration

Micro electromechanical systems (MEMS)

0νββ

So, **neutrino** has **mass**, but the actual mass is **unknown**…

A **measurement** that would shed light both on the **actual mass** of a neutrino and the **origin** of this mass is the detection of an extremely rare process known as neutrino-less double beta decay (0νββ).

Additionally, observation of this process could shed light on another fundamental mystery: why in a Big Bang that started with pure energy we ended up with a universe composed almost entirely of **matter** but no **anti-matter**?

The **Standard Model** of particle physics says **0νββ should not exists**,
→ it is violation of lepton number conservation.
If we measure it, it will be the first direct observation of physics beyond the Standard Model