4 Mirror Cavity R&D in Japan

T.Takahashi
Hiroshima Univ.

June 24 2009
PosiPol2009

Laser Compton Activity with optical cavity in ATF

- Laser Compton Pol e+ .....Miyoshi
- Compact X ray source (LUCX/Quatum beam) ..... Fukuda in PosiPol2008

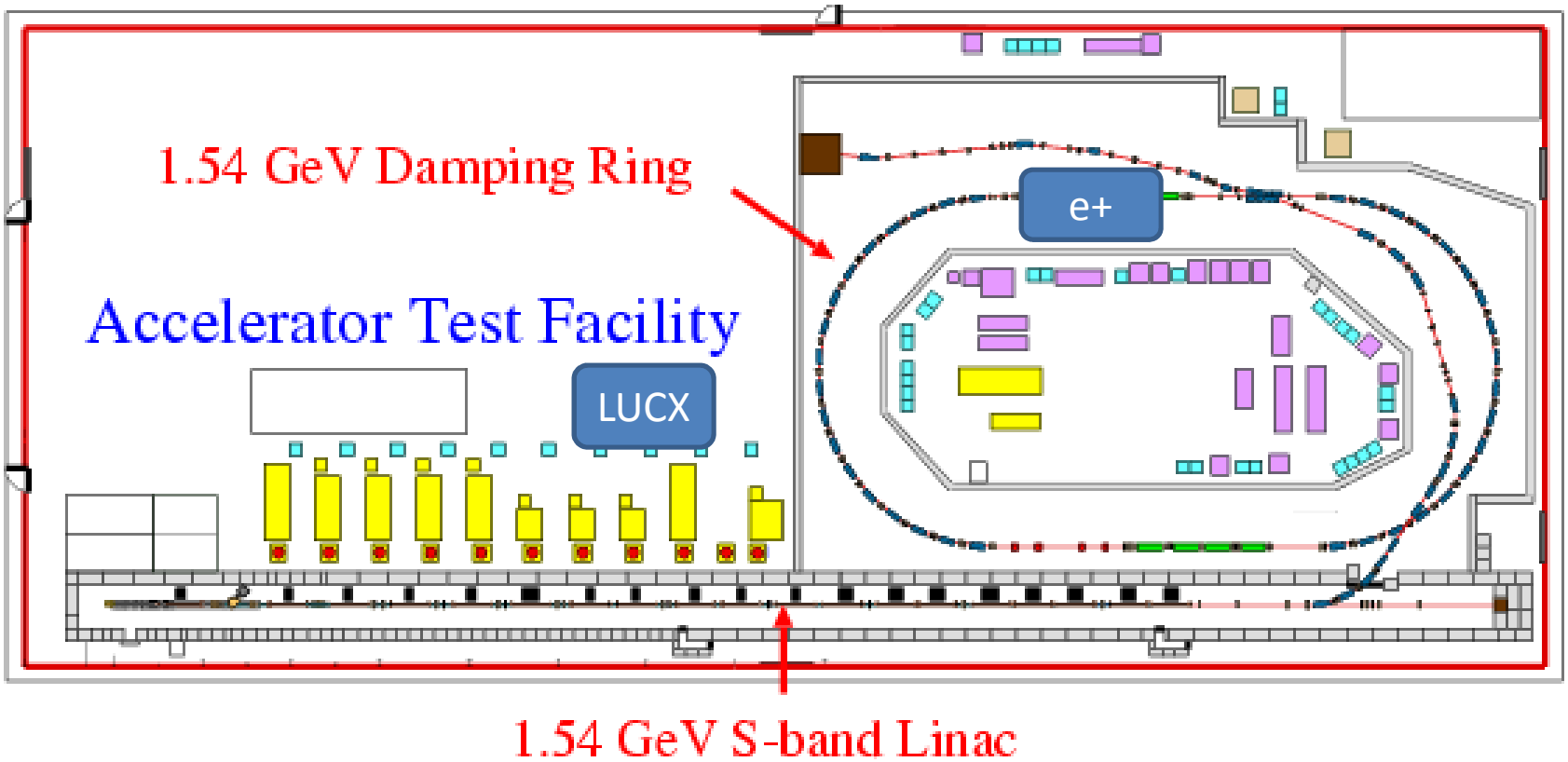

PosiPol

Hiroshima-Waseda-Kyoto-IHEP-KEK

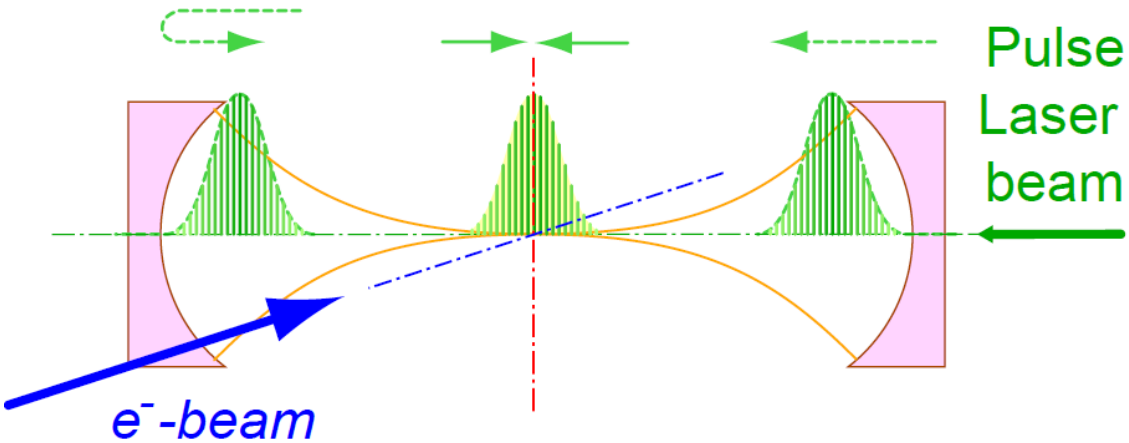

Make a fist prototype 2-mirror cavity

L_{cav} = 420 mm

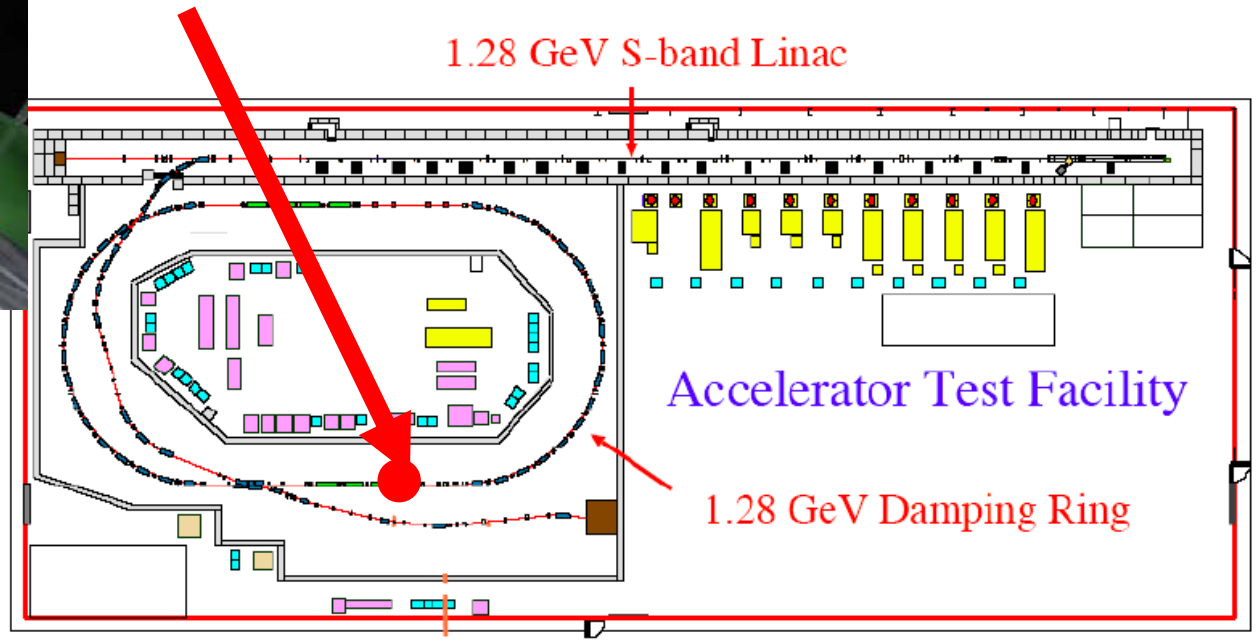

Put it in ATF ring

Observed Gamma-ray Spectrum

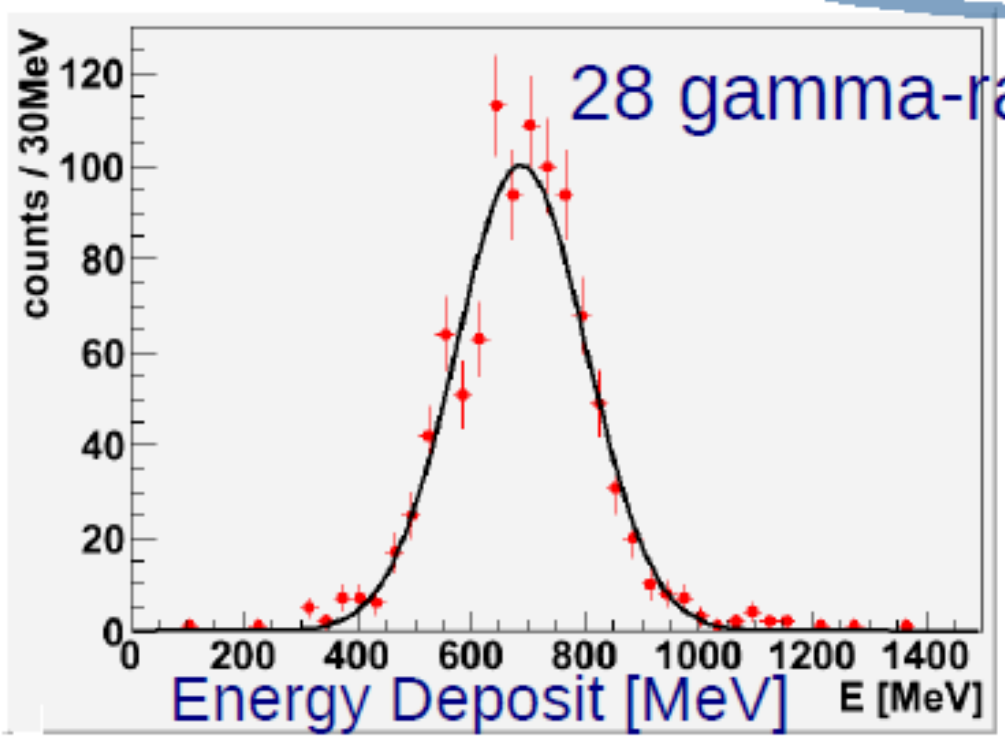

e- ring opr. mode
20 bunches / train

We observed 28.1±0.1 gamma-rays / train.
All solid angle → 60 gamma-rays / train

→ 60×2.16MHz ~ 1.2×10^8 [gamma / second]
Revolution

LUCX

Fukuda

Laser Undulator Compact X rayser

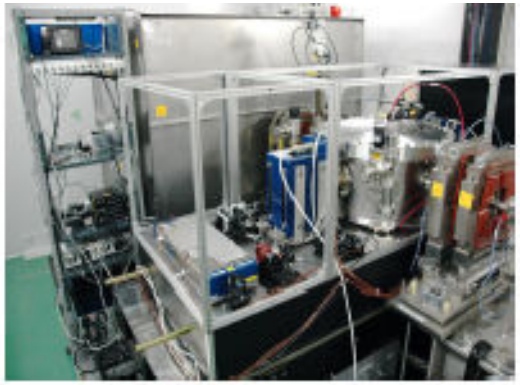

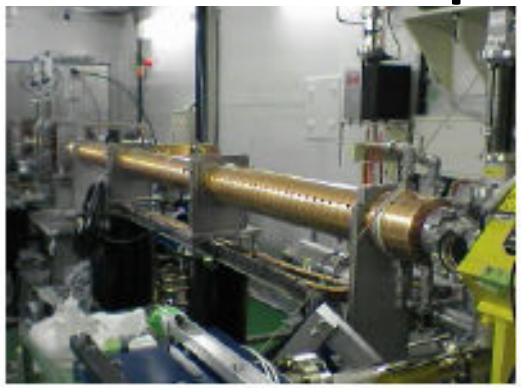

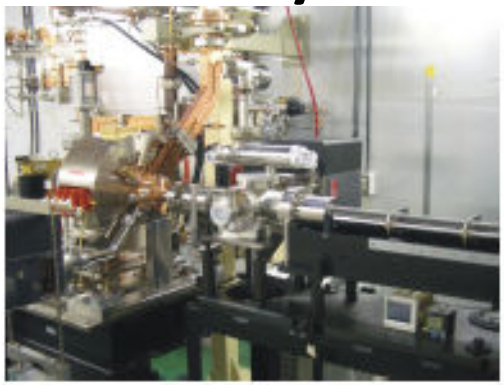

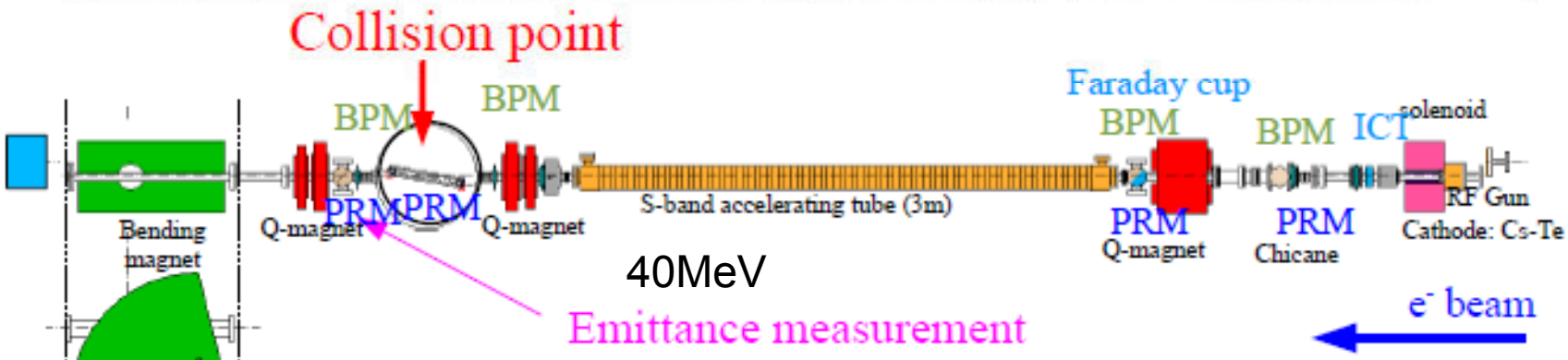

ICT & Faraday cup: Beam current monitor

BPM: Beam position monitor

PRM: Beam Profile Monitor

OTR target or Al_2O_3 (Cr^{3+} doped)

PRM
BPM
ICT

Beam energy and energy spread measurement

Pulsed Laser Cavity

Fukuda PosiPol200

The pulsed laser cavity is installed at the collision point.

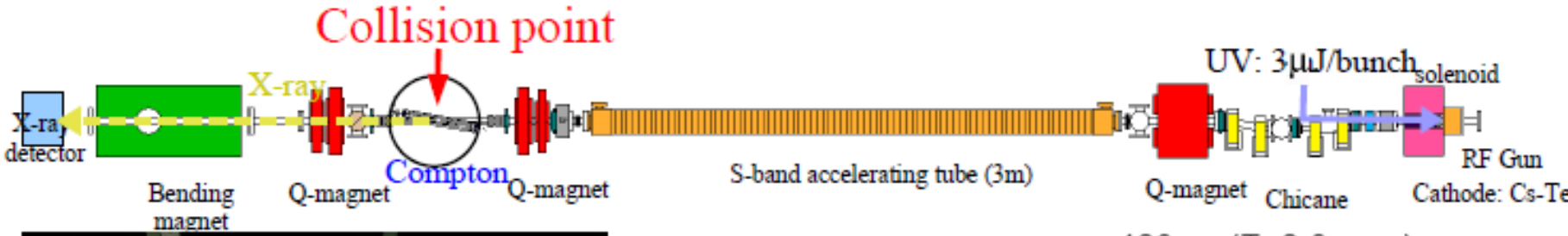

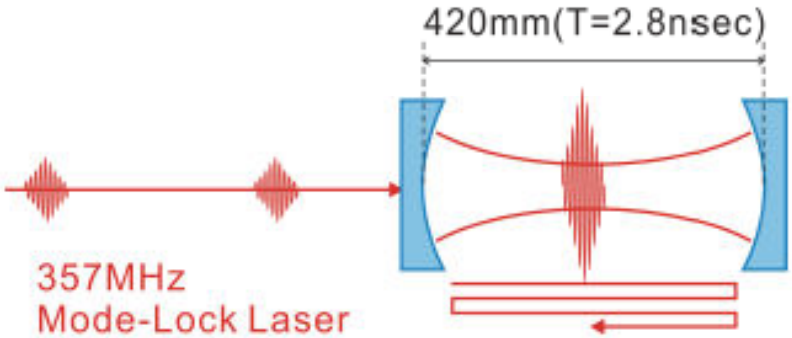

$$L_{cav} = n\lambda / 2$$

$$L_{cav} = mL_{laser}$$

Pulsed Laser cavity chamber

100 Bunch generation by LUCX

Sakaue Ph.D thesis

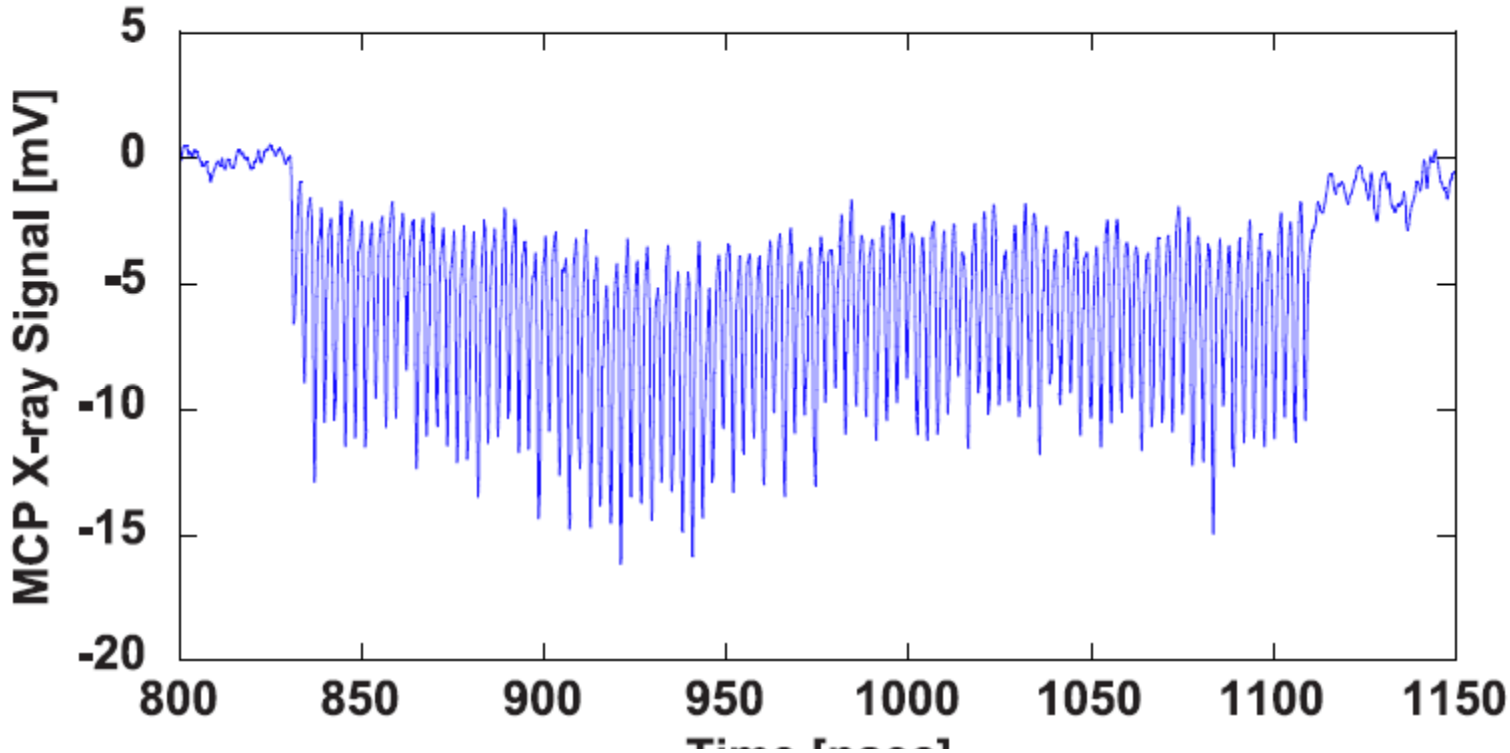

Table 5.1: Comparison of the number of produced X-rays

	Experiments	CAIN
Within Collimator	1.65×10^2 Photons/Train	2.0×10^2 Photons/Train
Total Number	0.93×10^4 Photons/Train	1.13×10^4 Photons/Train

Quantum Beam Project supported by JST

Development for Next Generation Compact High Brightness X-ray Source using Super Conducting RF Acceleration Technique

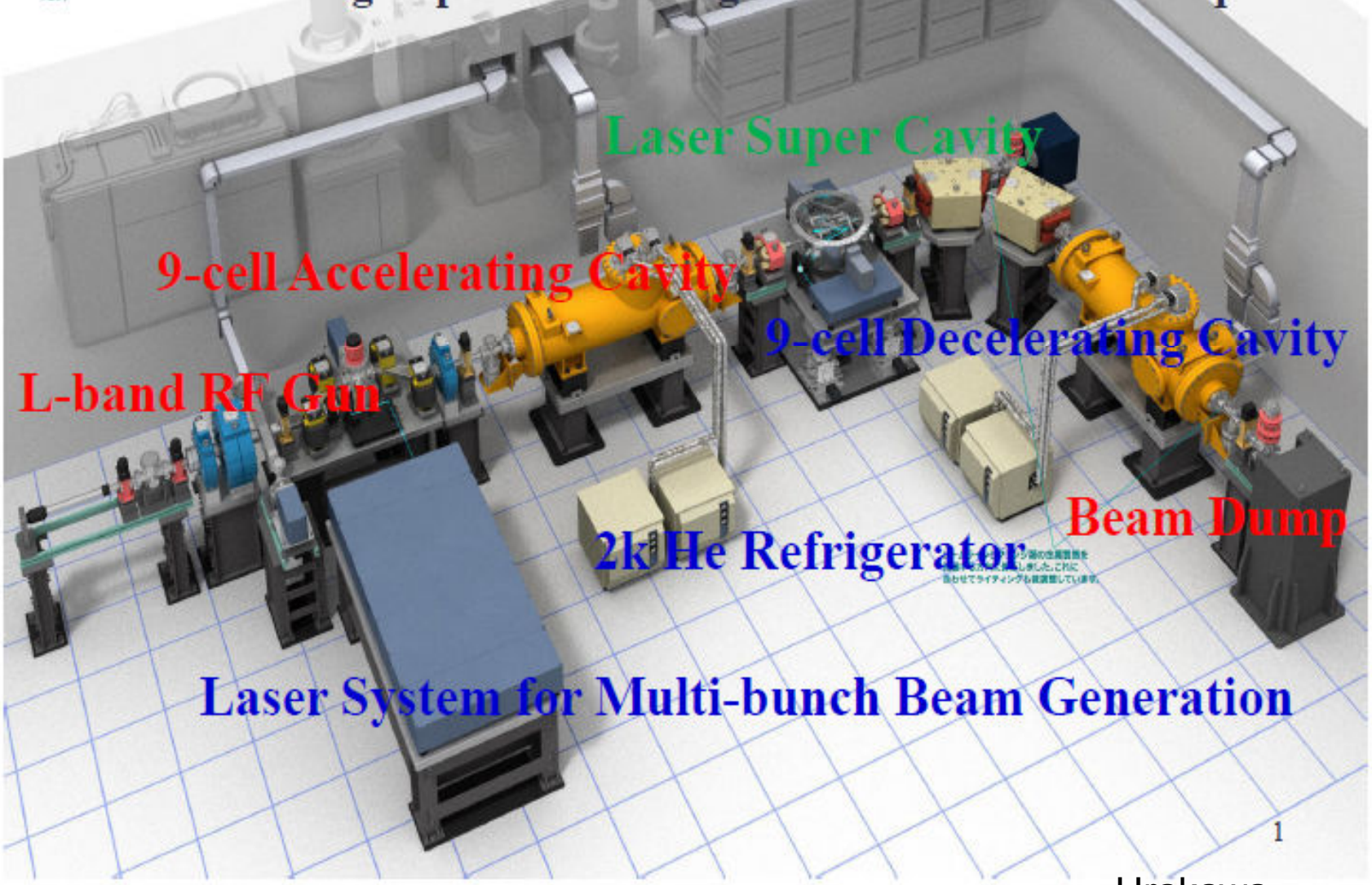

Urakawa

2-mirror-cav to 4-mirror-cav.

2-mirror cavity

4-mirror cavity

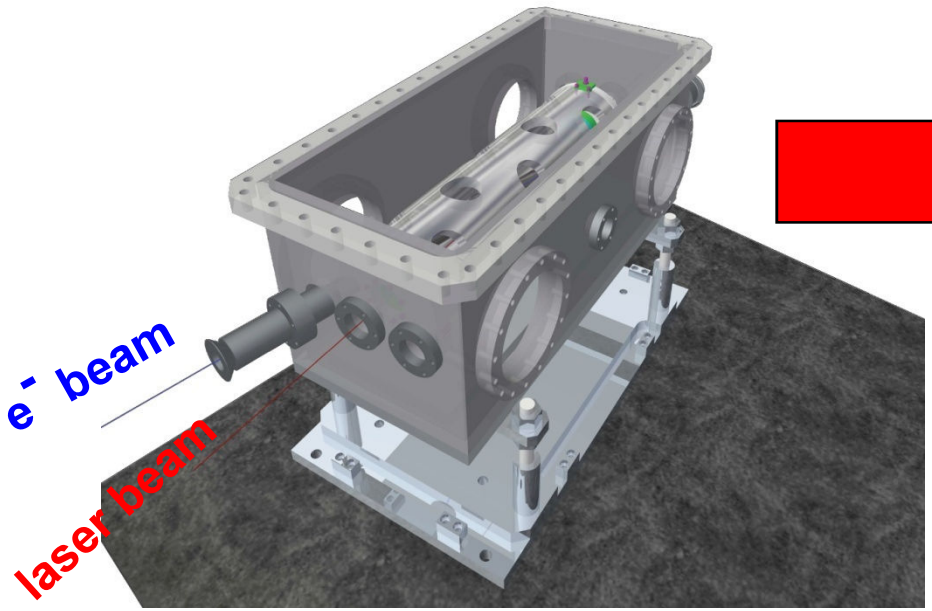

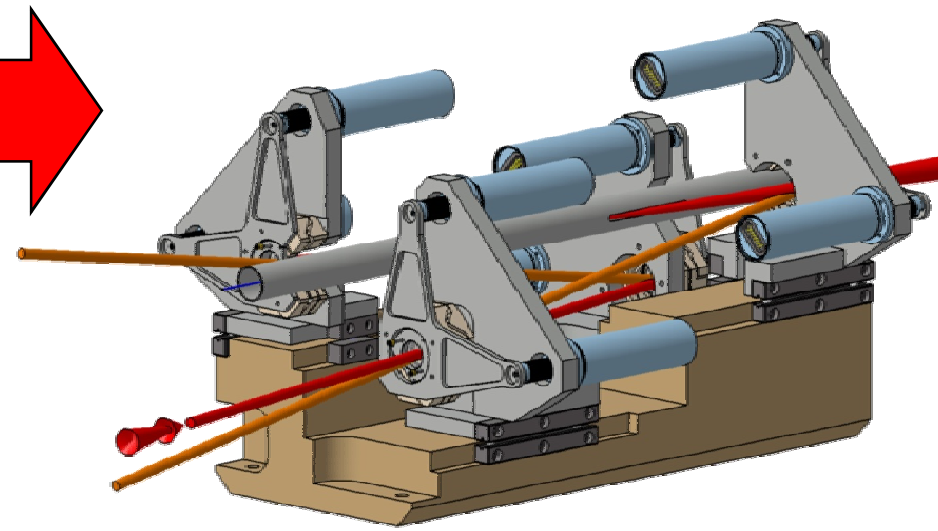

R. Cizeron

Spot size = 30 um

Enhance = 1000

difficult to achieve both high enhancement and small spot

Spot size = 10 um

Enhance = 10000

2D configuration

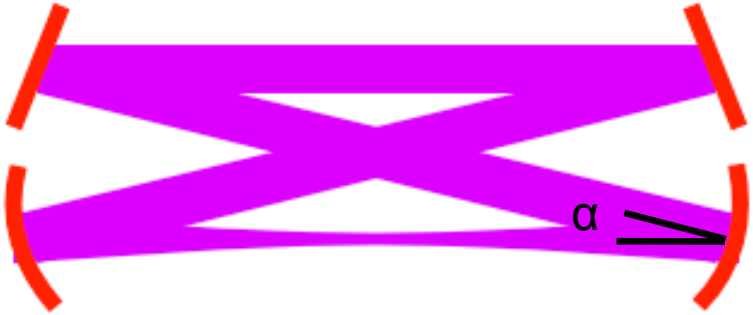

$$f_t = \frac{\rho}{2}\cos(\alpha/2)$$

$$f_s = \frac{\rho}{2\cos(\alpha/2)}$$

Focal points for horizontal and vertical are not same

3D configuration

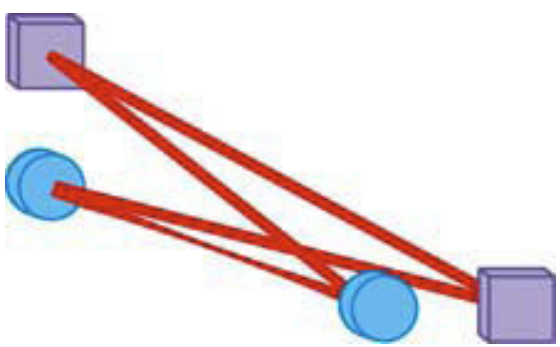

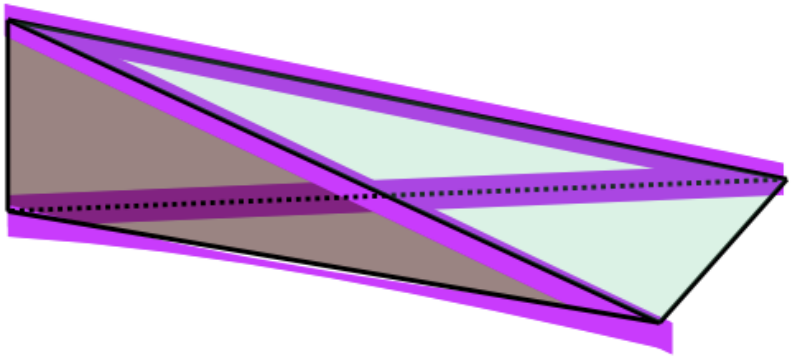

R&D of 4 mirrors cavity started

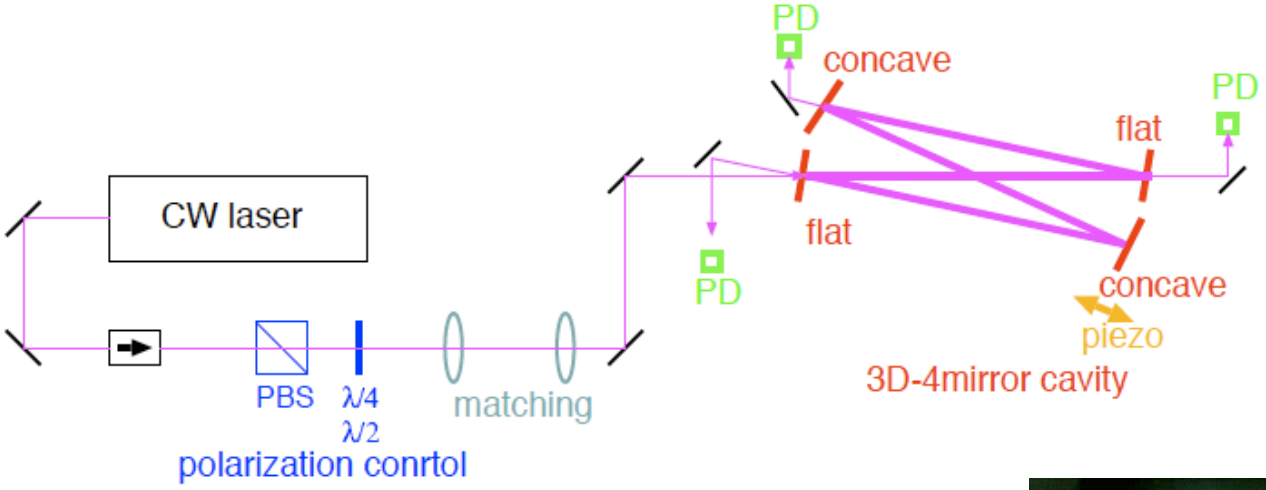

Honda

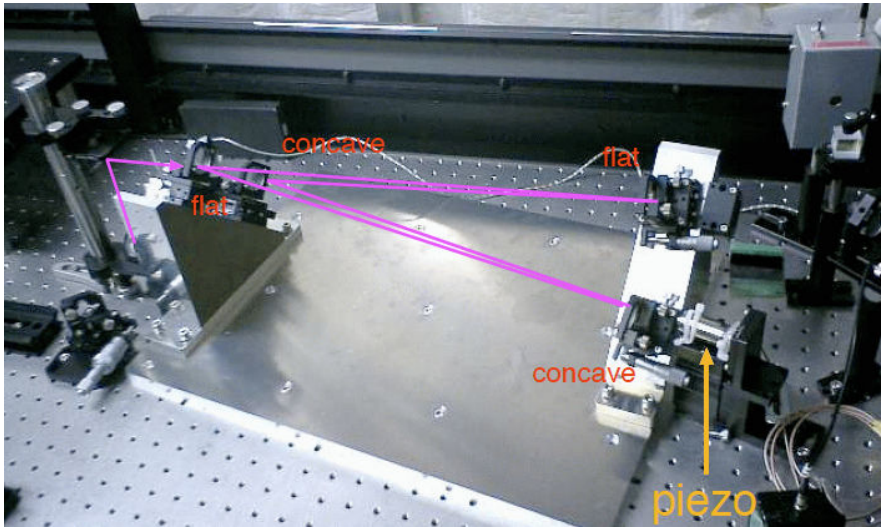

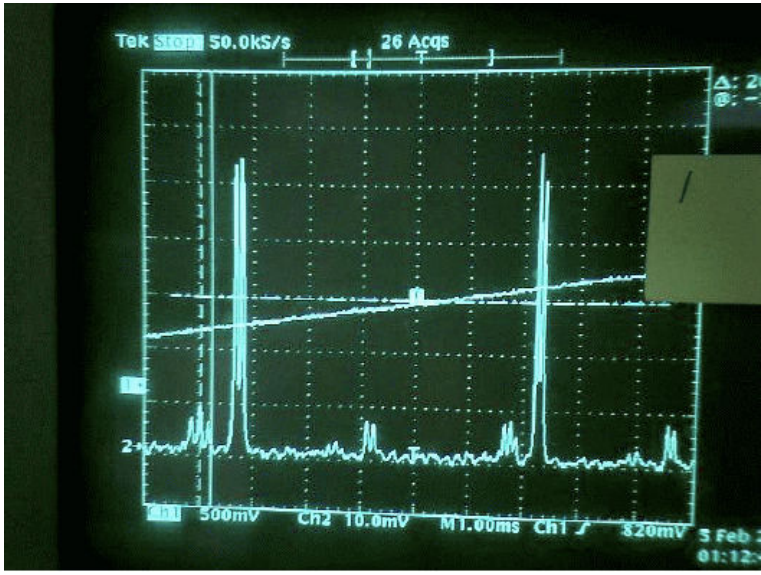

polarization property of the 3 dimensional 4 M ring cavity

- circular polarization state get geometrical phase ,,,,,,, Berry's Phase

$$\frac{\vec{k}\cdot\vec{\sigma}}{\left|\vec{k}\cdot\vec{\sigma}\right|}\left|\psi_{\pm}\right\rangle = \pm\left|\psi_{\pm}\right\rangle \quad \left|\psi_{\pm}\right\rangle \rightarrow \exp\left(\pm i\Gamma\right)\left|\psi_{\pm}\right\rangle$$

- For linearly polarized photon, it is rotation of the direction of the polarizaton

$$\begin{pmatrix}\psi_s\\ \psi_p\end{pmatrix} \rightarrow \begin{pmatrix}\cos(\Gamma) & \sin(\Gamma)\\ -\sin(\Gamma) & \cos(\Gamma)\end{pmatrix}\begin{pmatrix}\psi_s\\ \psi_p\end{pmatrix}$$

3D 4M cavity resonate only for
left or right handed circulate polarization

Two resonant peaks due to geometrical phase

Injecting linearly polarized laser

$$|\psi_R\rangle = |\psi_+\rangle + |\psi_-\rangle$$

Honda

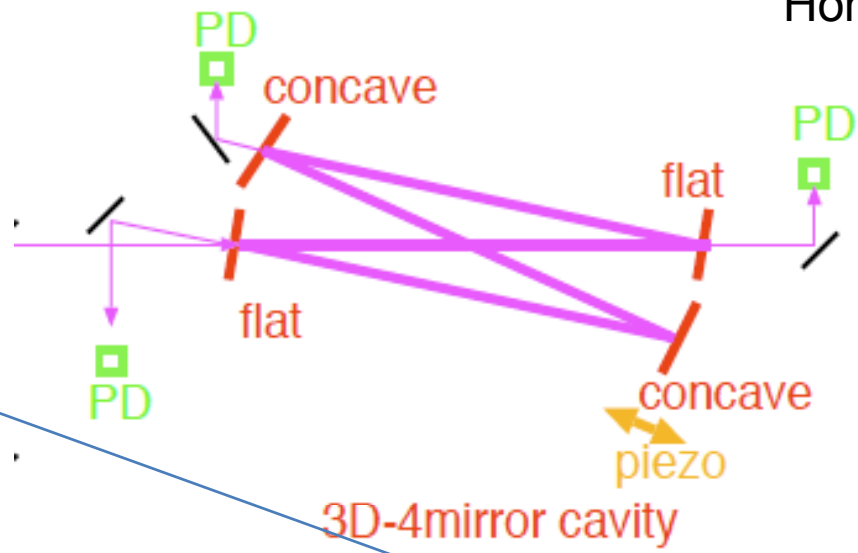

Right R+L Left

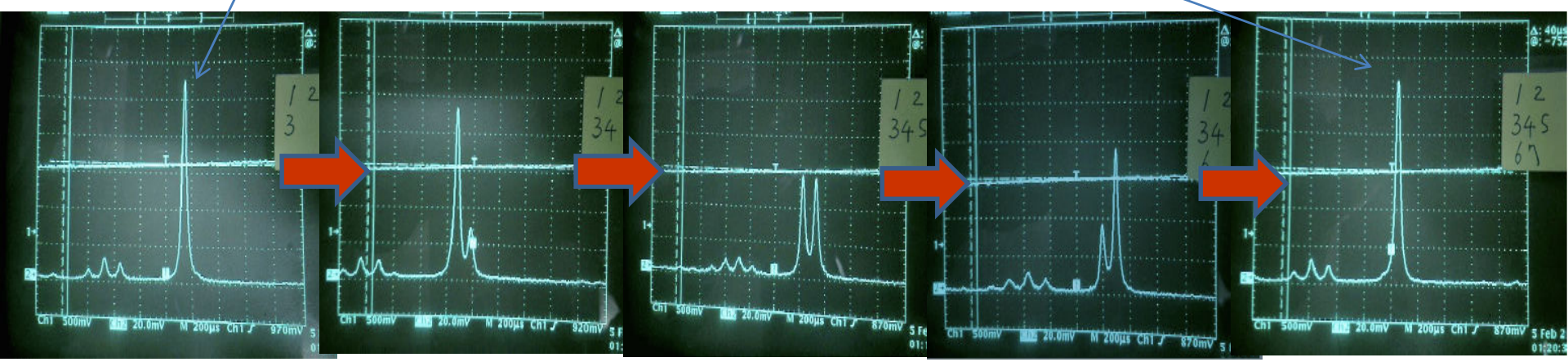

Application to feed back system

- possible to make feed back signal for each circular state

Honda

- easy to switch polatization

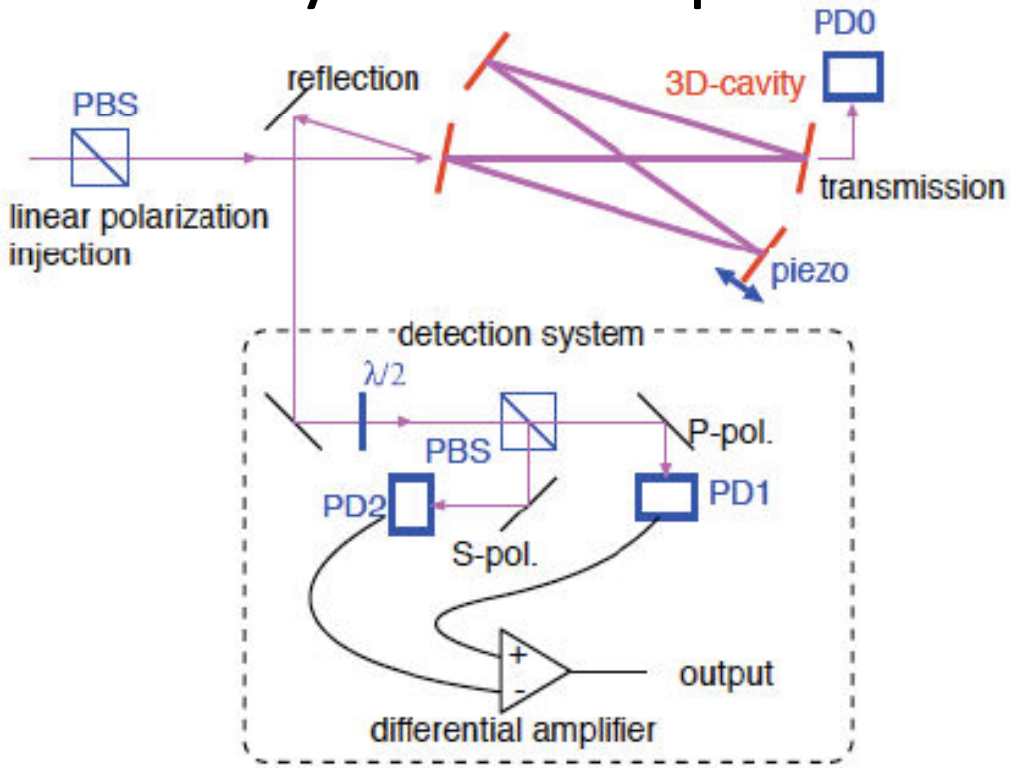

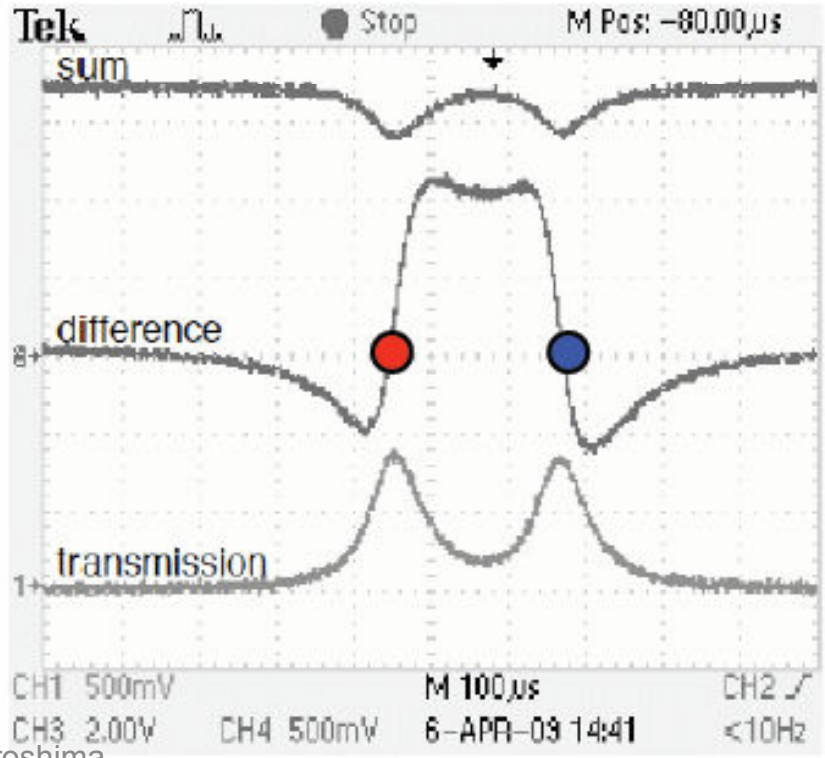

Prototype 4M cavity

- basic study,,, not to be installed to the acc.
- see if the structure is rigid enough to keep resonance

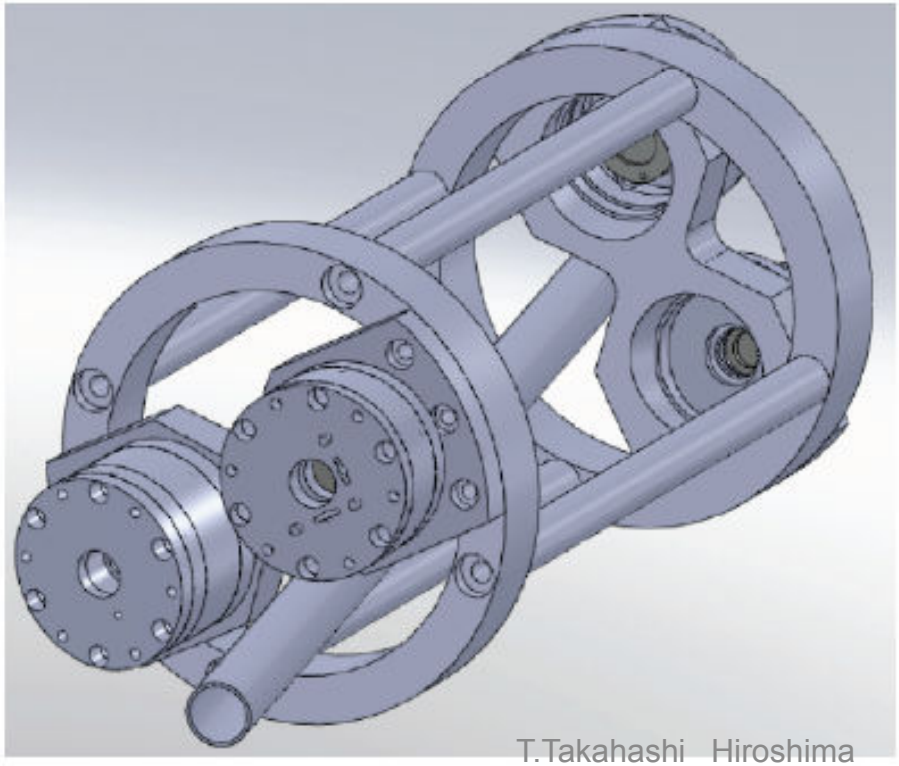

Honda

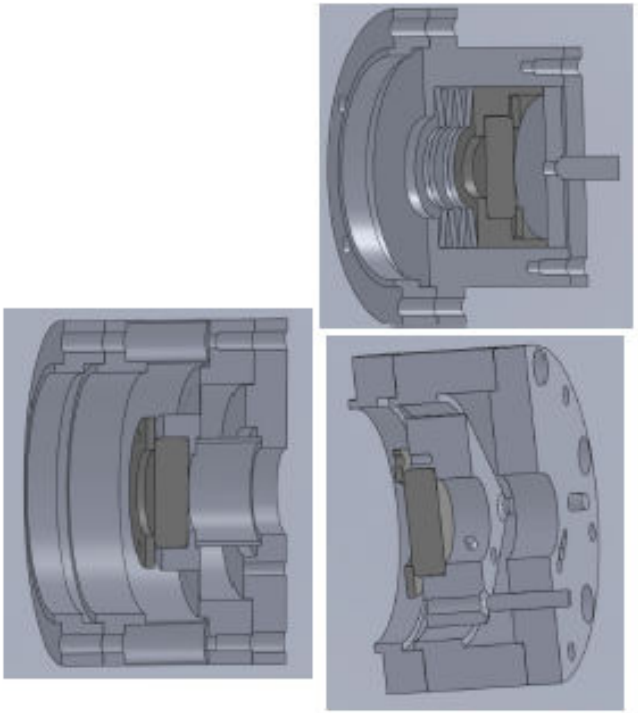

Status of the protype

- now drawing
- ready by the end of July

Honda

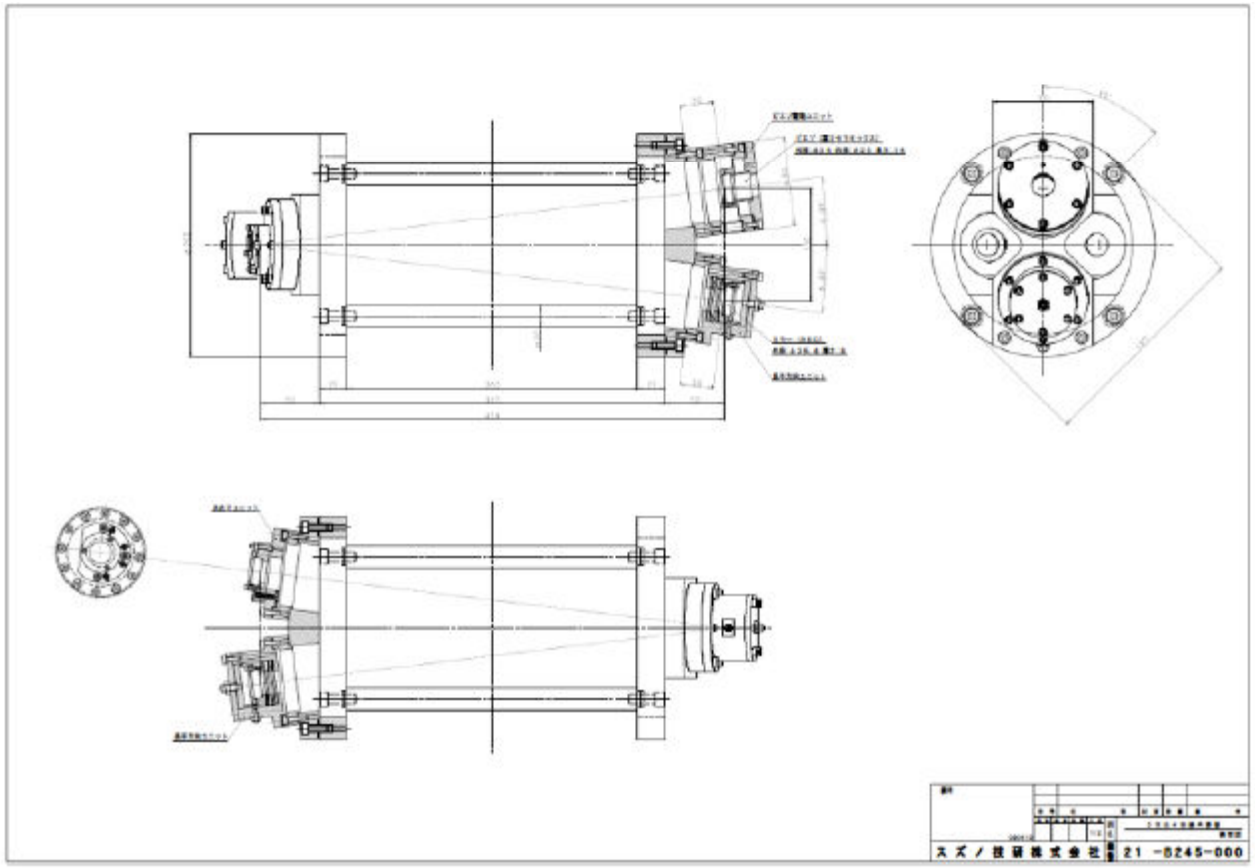

Optical Cavity R&D around ATF

- O(10MeV) γs for Compton Based Polarized Positron source.
- Hard X ray (~30keV) sources
  - LUCX project
- New 5 year project
  - Compact X ray source w/ SRF electron accelerator and pulse stacking cavity.

Summary and prospects

- **photon generation by Laser pulse stacking cavity / accelerator has been demonstrated both for**
  - Polarized electron source (PosiPol)
  - hard x ray generation (LUCX)
- **A project for x ray source has started**
- **All projects going to 4 mirror ring cavity**
  - Technique with Ring cavity and e-beam will be accumulated in next 3-4year
  - Study of 4M cavity is under way
    - unique property for polarization
    - new technique for cavity stabilation
    - first prototype ….. summer 2009

Table 2.9: Specification of normal-mode super-cavity

Wavelength	1064nm
Pulse Repetition	357MHz
Finesse	1889.9
Injected Power	4W
Storage Power	2kW
Pulse Energy	5.6μJ
Enhancement Factor	500
Waist Size	89.2μm (1σ)
Pulse Duration	7ps (FWHM)

Table 2.10: Specification of burst-mode super-cavity

Wavelength	1064nm
Pulse Repetition	357MHz
Finesse	878.5
Amplifier Gain	70
Storage Peak Power	40kW
Pulse Energy	112μJ
Enhancement at Peak	13000 (Amp. and Cav.)
Waist Size	30.3μm (1σ)
Pulse Duration	7ps (FWHM)

Energy	40MeV
Intensity	40nC/train (0.4nC/bunch)
Number of Bunch	100bunches/train
Bunch spacing	2.8ns
Rep. Rate	3.13Hz
Emittance	8-10 [π mm mrad]
Energy Spread	0.12% (r.m.s.)
Beam size at C.P.	80um x 40um