CERN

CATIA Design Requirements applied to Computer Aided Manufacturing at CERN

Pierre Naisson EN/MME/MA
Christophe Bault EP/DT/EO

Machining ?

- From raw material to real part

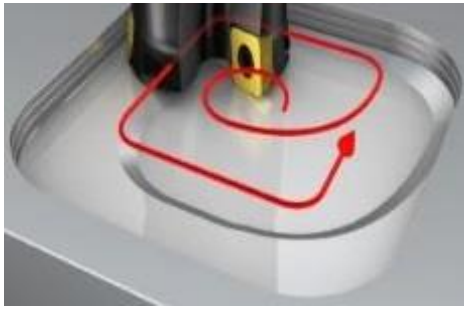
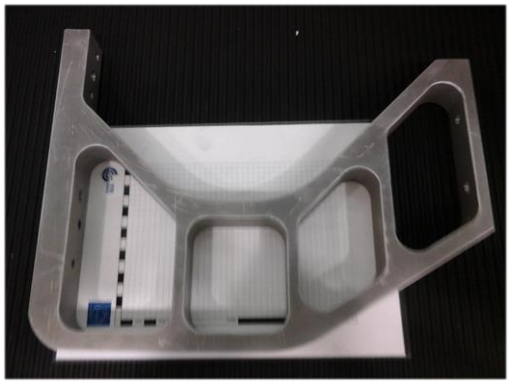

Outlines

- CNC workshop
- CAD/CAM
- Examples
- Outlook

Outlines

- **CNC workshop**
- CAD/CAM
- Examples
- Outlook

Figures – EN/MME

- 8 CNC milling machines
  - +6 lathes
  - +9 non standard machines (no CAM)
- 3 computers for programming
  - Feature CAM
- 1500 jobs/year,
- ~250 programs created/year

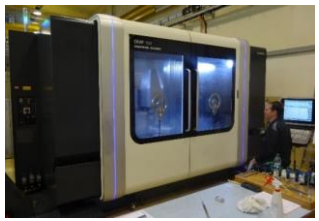

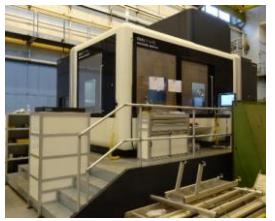

Figures – other workshops

- EP/DT
  - 3 CNC milling machines + 1 CNC lathe
  - Feature CAM + CATIA CAM

- BE/BI
  - CNC machines
  - ESPRIT CAM

- TE/MSC
  - 3 CNC milling machines + 1 lathe
  - Go2CAM CAM

- EN/STI
  - Investigation

Standard Workflow

- 3D model based procedure

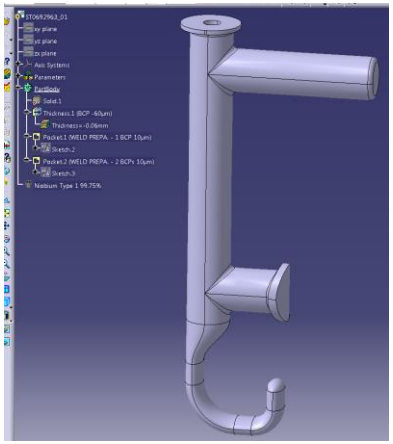

*CATPart or *stp (worst solution)

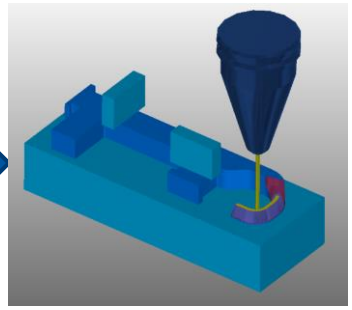

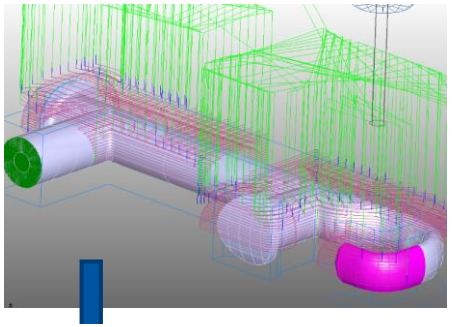

CAM software (Locally saved)

Post Processing

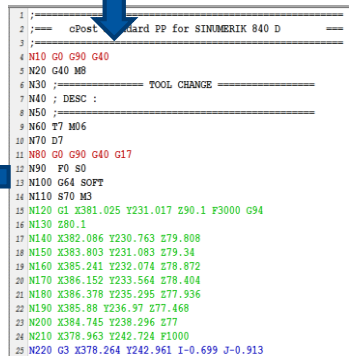

Machine specific
ISO G code

Outlines

- CNC workshop
- **CAD/CAM**
- Examples
- Outlook

What is CAD/CAM ?

- CAM = computer-assisted manufacturing
- Old but very dynamic field of R&D

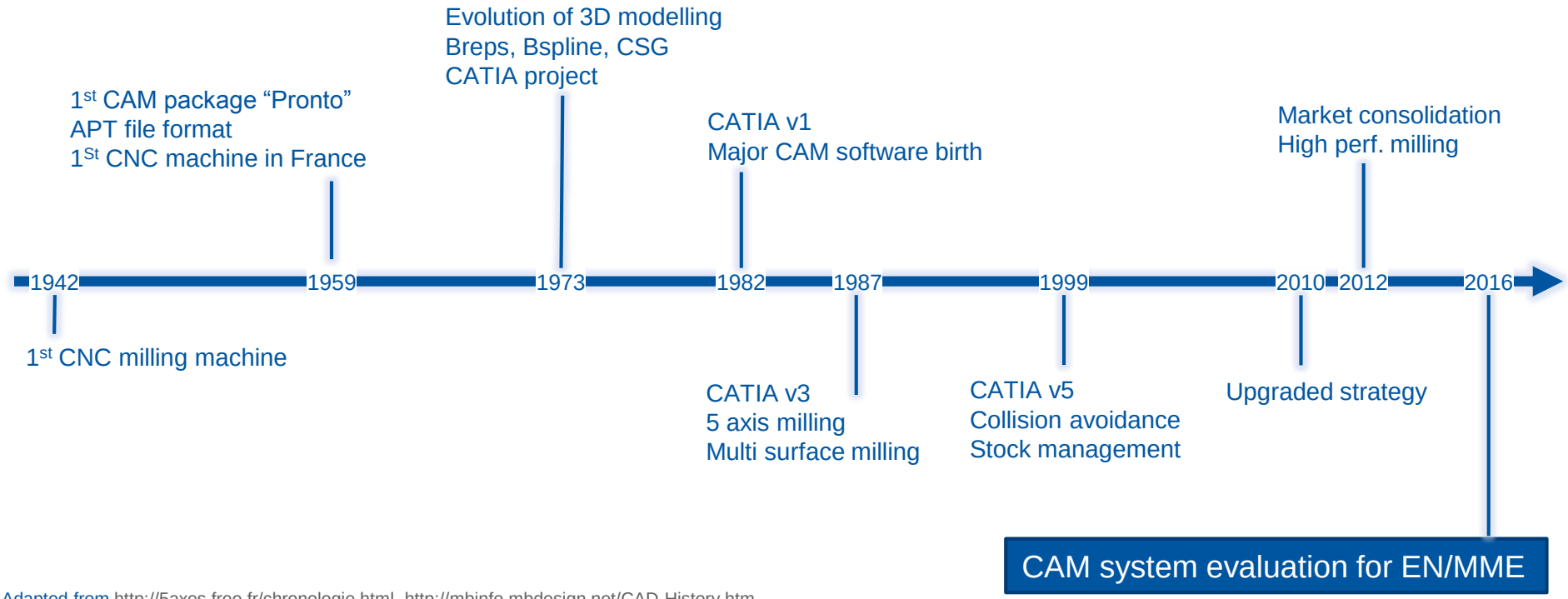

Adapted from http://5axes.free.fr/chronologie.html, http://mbinfo.mbdesign.net/CAD-History.htm

What is CAM ?

- Surface-based tool trajectory computation
  - Mathematics: tool axis positioning regarding the local normal vector of the surface
    - Influence of CAD, u/v's, format, precision,…

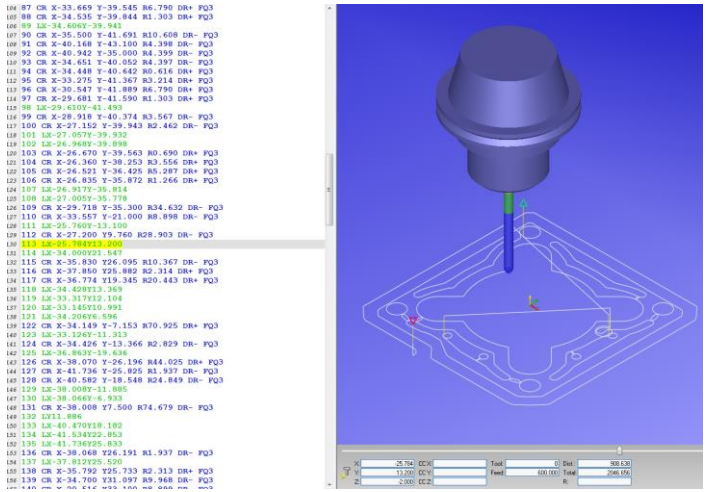

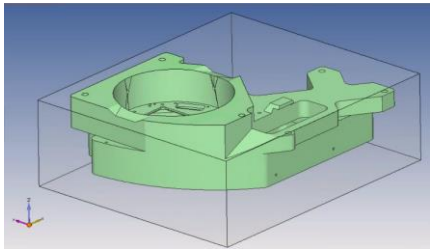

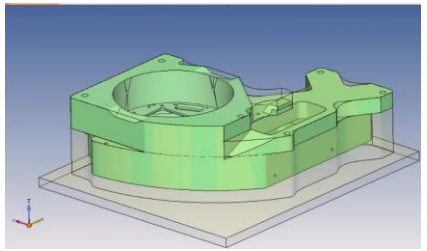

Extracted from http://hu.topsolid.com/download/videos/topsolid-demo-library/complex-machining/stock-management.htm

Powerful but tricky

- The same part could be machined with various strategies
  - Example: pocket

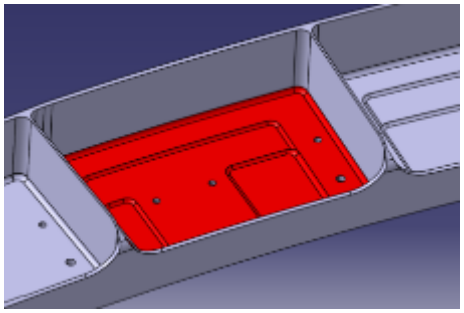

solution	tps (s)	volume (cm3)	débit (cm3/min)	Q outil	vc (m/min)	fz (mm/dt)	P (W)	Fc (N)	C (m.N)	
surfacer dresser	165	320	116.4	127.3	250	0.25	4455	1069	27	Safest
fraise à surfacer	103	320	186.4	195.9	250	0.4	6856	1645	41	Easiest
fraise à grande avance	51	320	376.5	399.9	250	1.1	13996	3359	76	Fastest
plaquette ronde ϕ12	134	320	143.3	151.5	250	0.35	5303	1273	32	Hardest

Powerful but tricky

- The same part could be machined with various strategies
  - Example: toolpath
    - Continuity/vibration

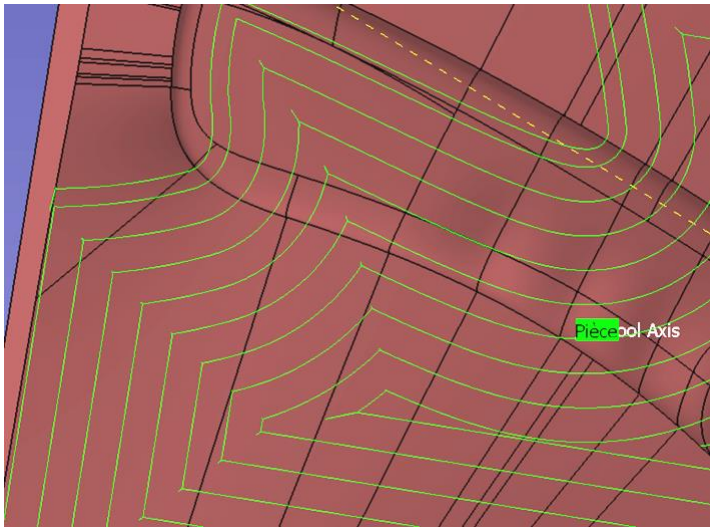

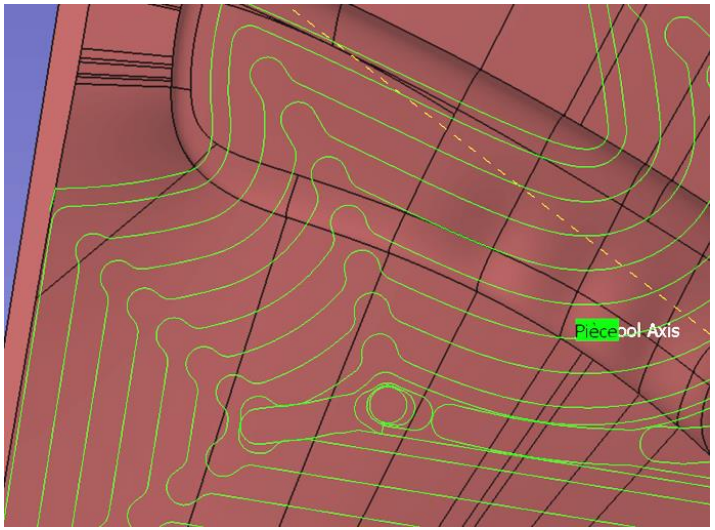

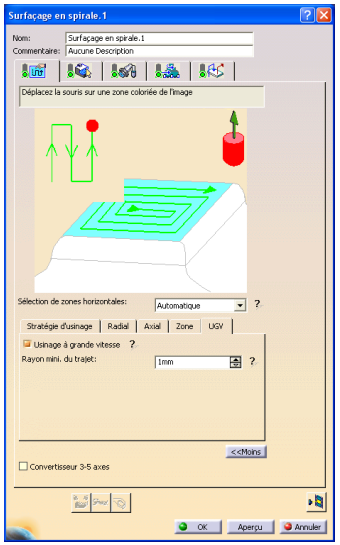

Powerful but tricky

- The same part could be machined with various strategies
  - Example: Parameters
    - Surface finish

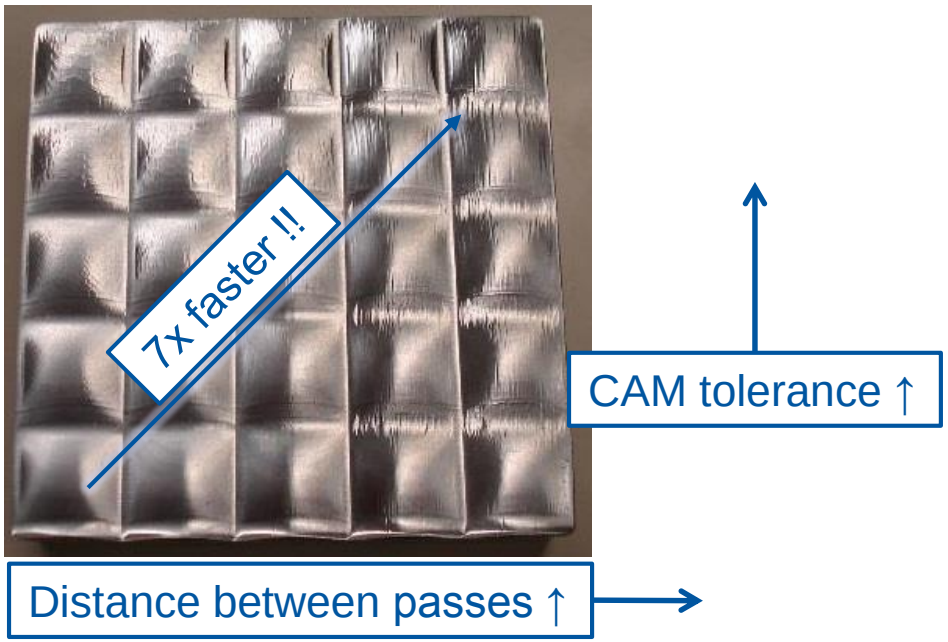

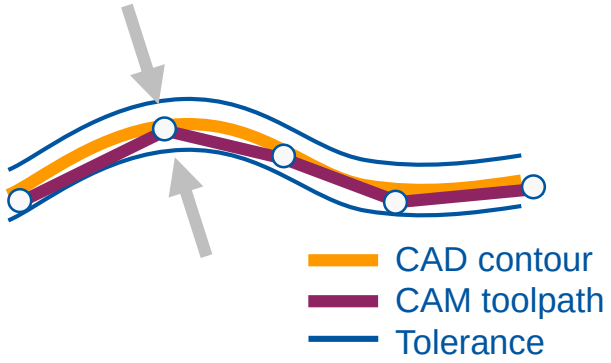

Numerical workflow

- Error sources
  - CAM is one of many possible flaws

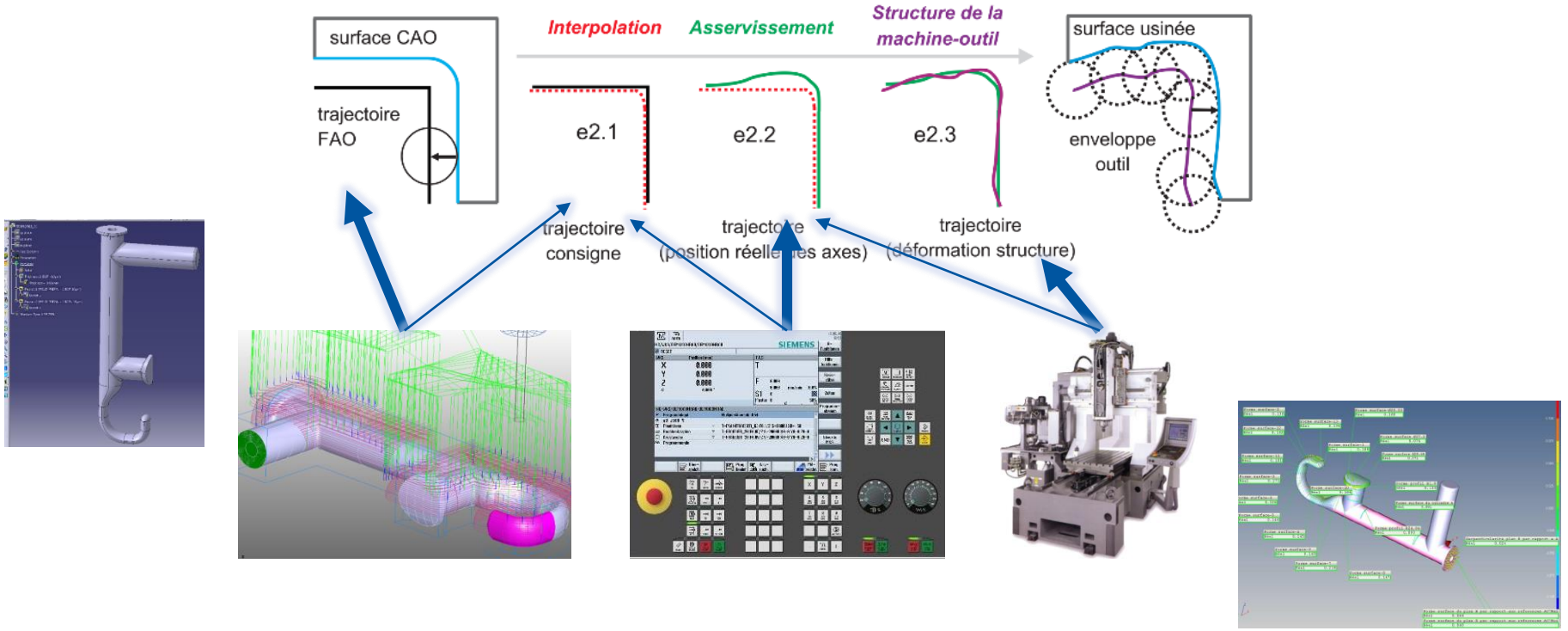

Outlines

- CNC workshop
- CAD/CAM
- **Examples**
- Outlook

3D model quality

- The contract is on 2D drafting…
  - Consistency of 2D ⬅➡ 3D
    - Need for synchronization / conform 3D model

```
NOTA 1 : NOMINAL DIMENSIONS ACCORDING TO 3D MODEL
(SEE ST0652606_02)
```

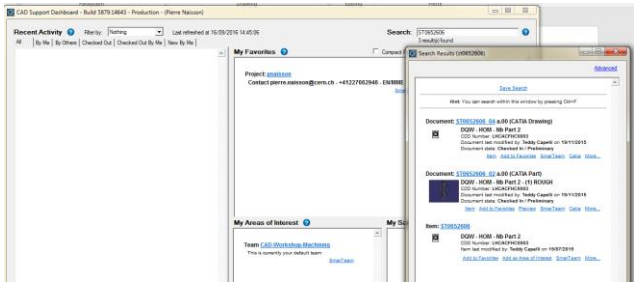

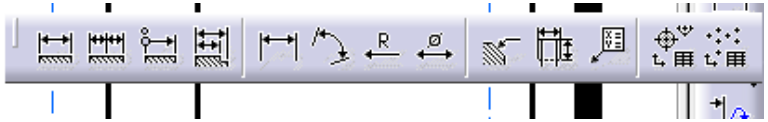

LHCACFHC0003

3D model quality

- The GSD issue

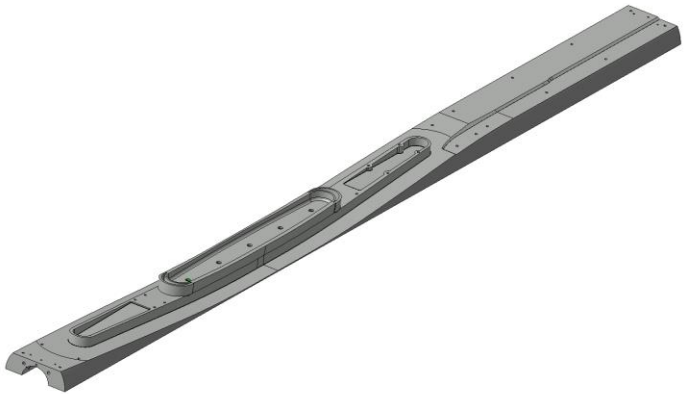

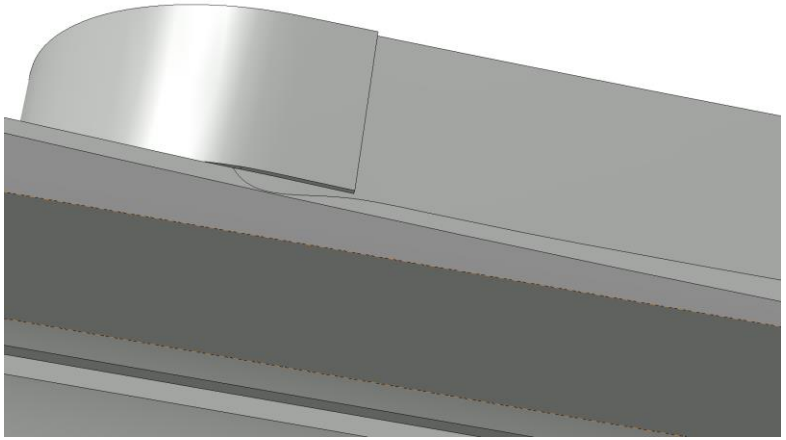

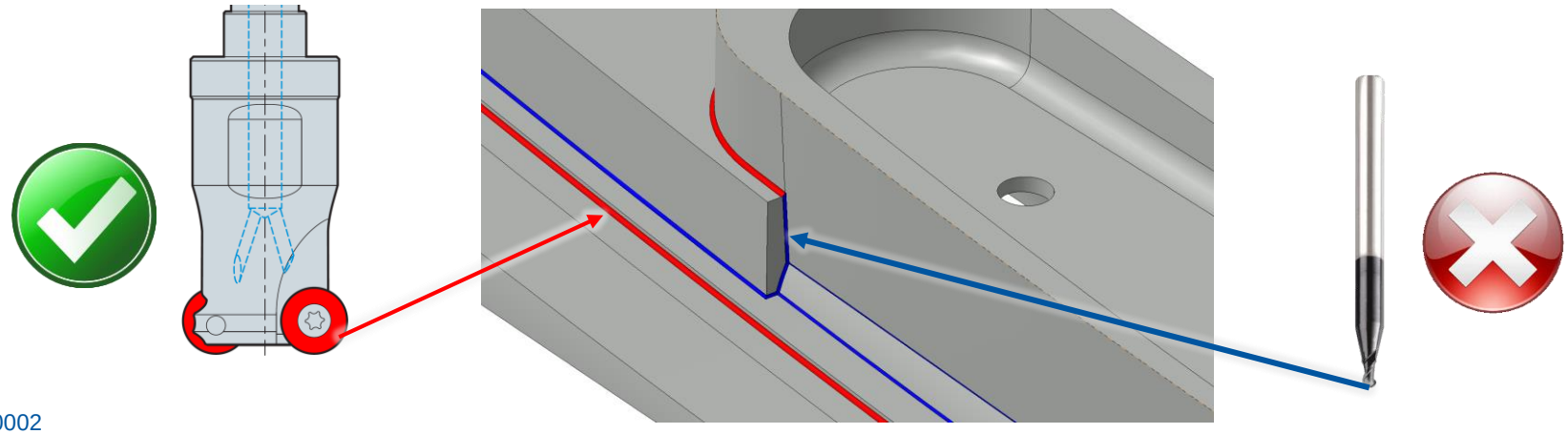

HFMF2HTS0002

3D model quality

- The GSD issue
  - Low accessibility zone
    - Cost + poor quality

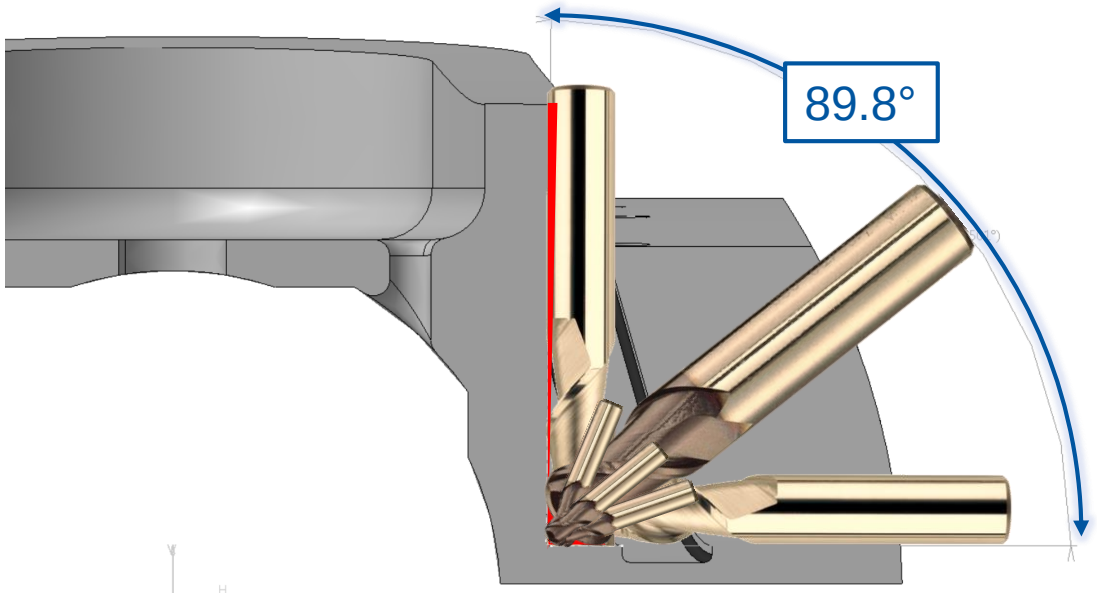

HFMF2HTS0002

GPS side effects

- Manufacturing scheme
  - Chocks, scratches

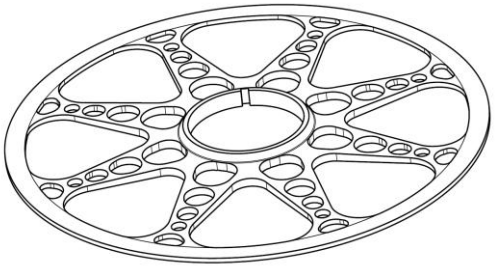

Ind-0

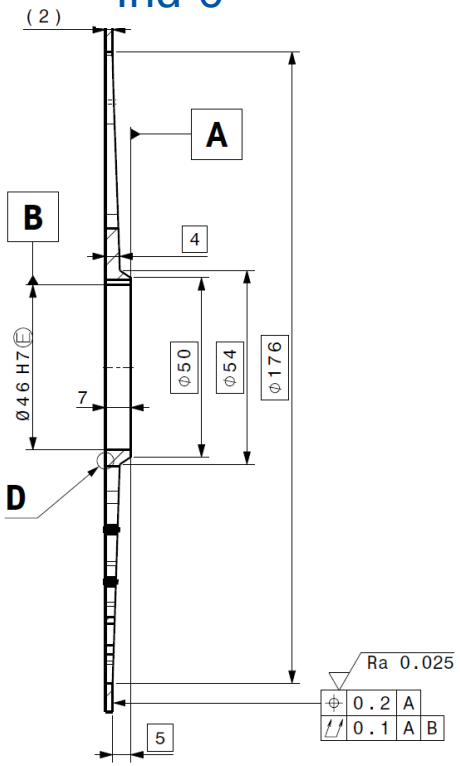

Ind-1

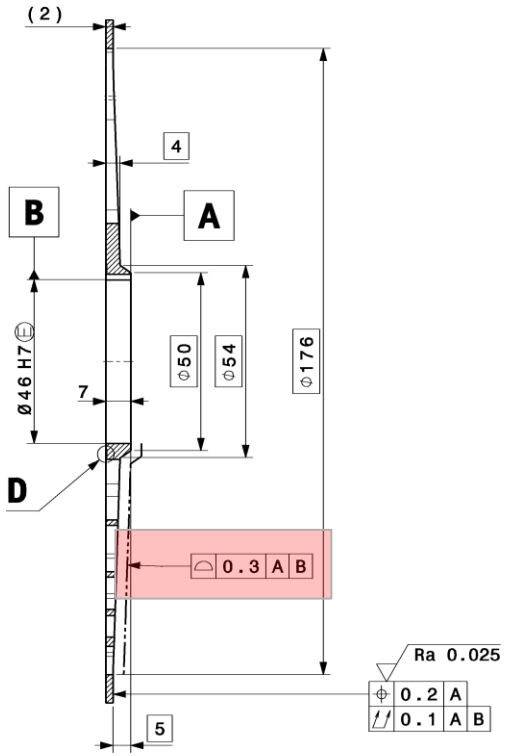

PSBBWSRA0041

GPS side effects

- Decentered tolerances
  - Programmed as centered value IRL

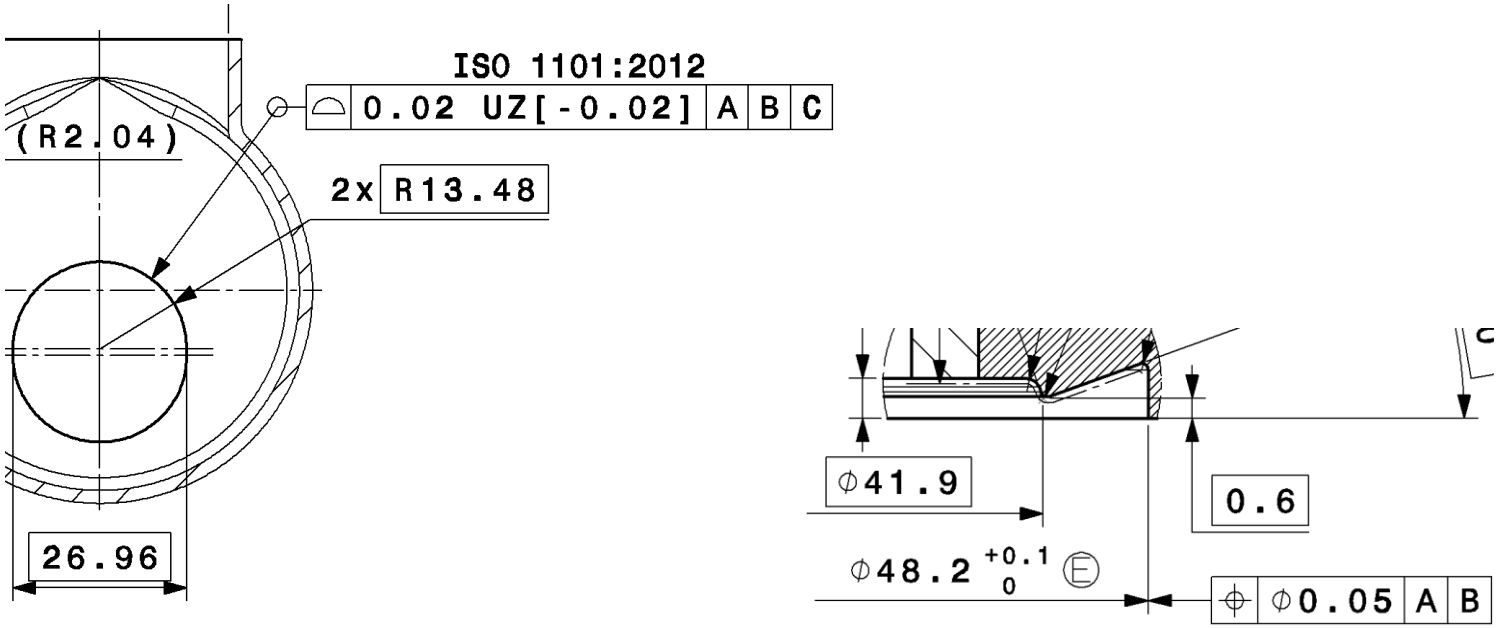

LHCACFHC0027

Design to manufacturing

- Hole, thread and counterboring
  - Automatic recognition though colored feature
    - Ex: blue = threads, red = counterbore,… ?

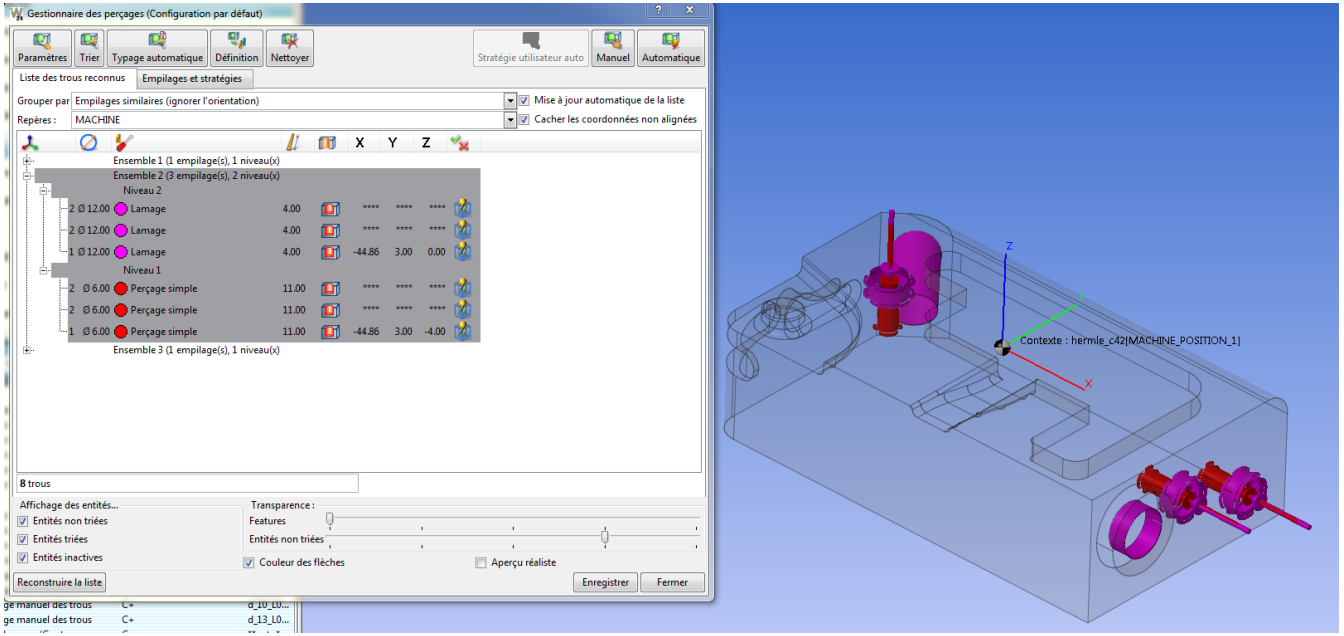

Design to manufacturing

- Shape adaptation to improve machinability
  - Accuracy + precision

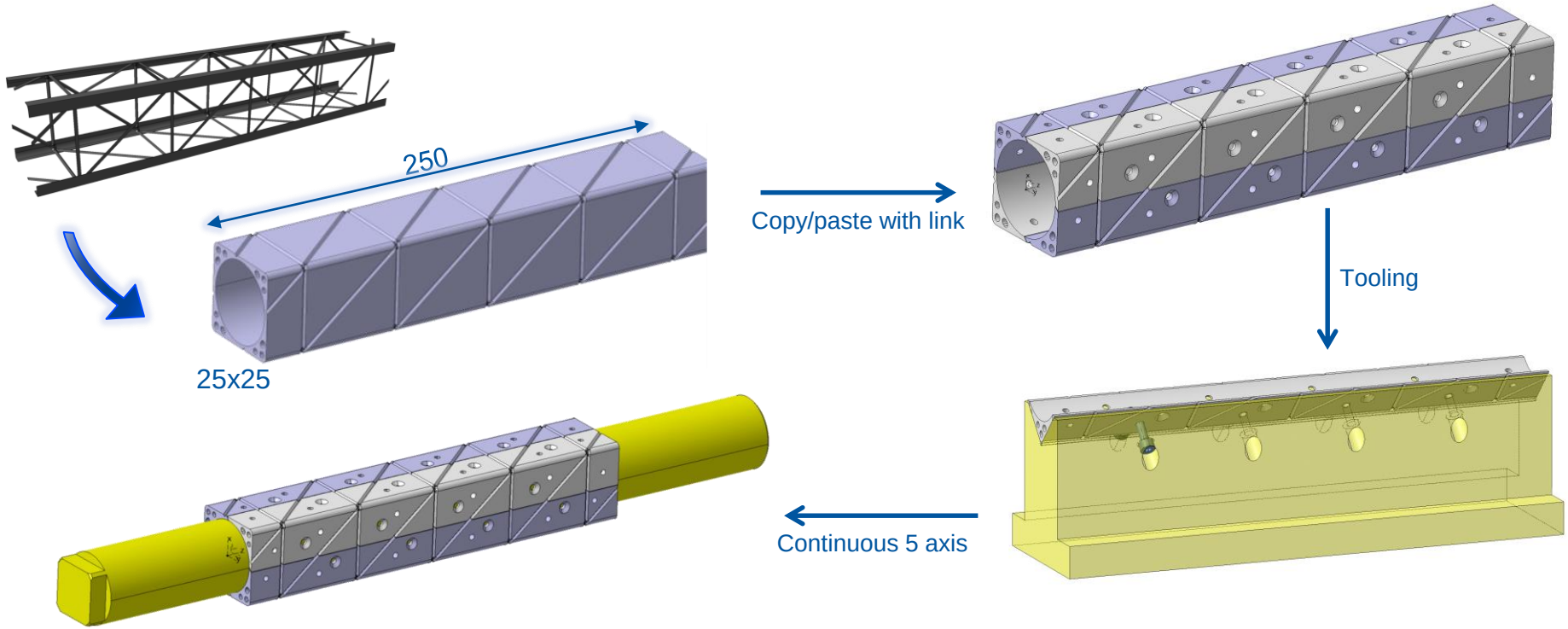

EP-DT: Carbon fibre stave

Design to manufacturing

- Shape adaptation to improve quality
  - Unmolding, surface finish

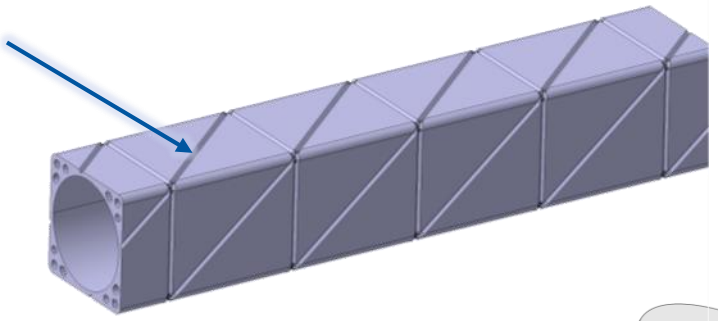

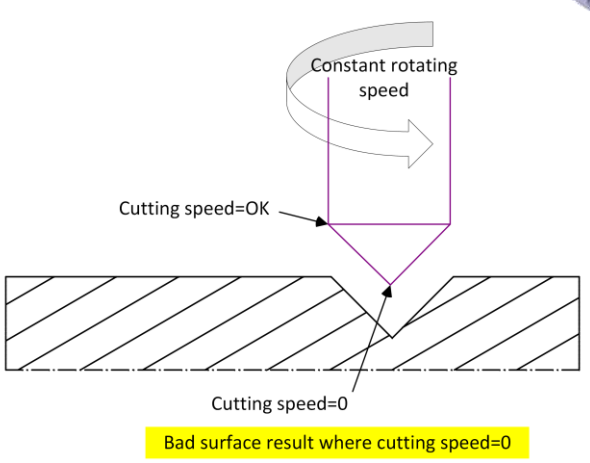

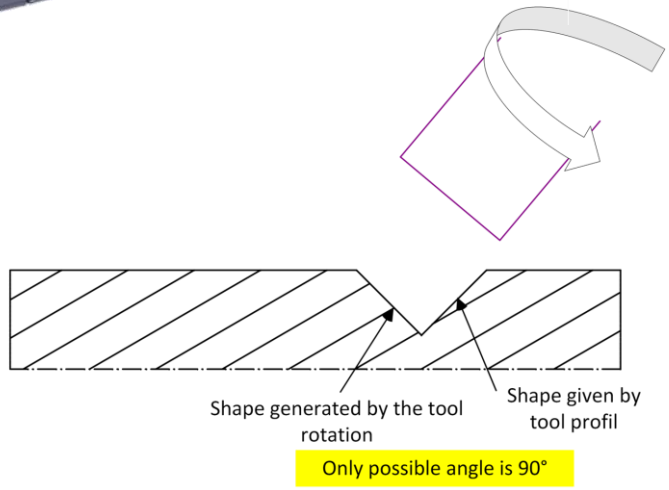

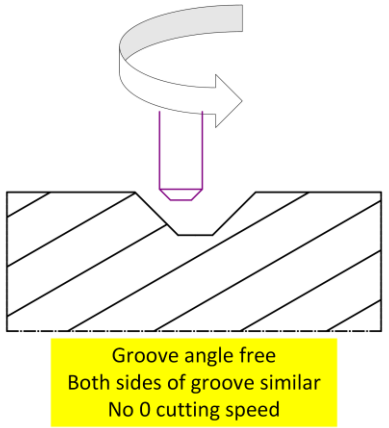

EP-DT: Carbon fibre stave

Outlines

- CNC workshop
- CAD/CAM
- Examples
- **Outlook**

EN/MME CAM solution

- CAM evaluation
  - Efficiency in milling (5 axis)
  - Easy to use (aside milling machine)
  - Turning → TBD (future investments)

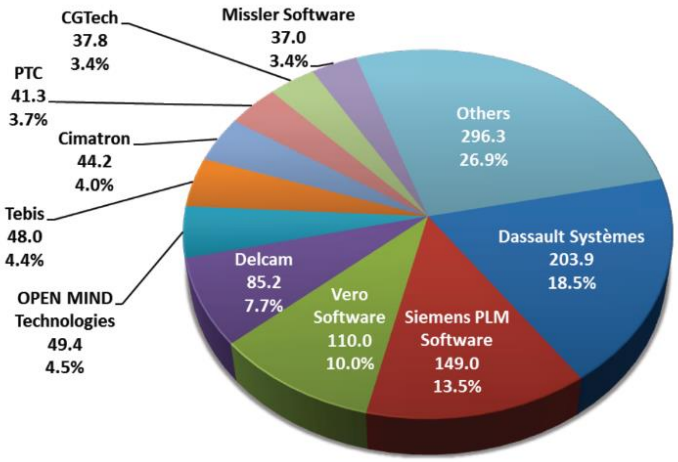

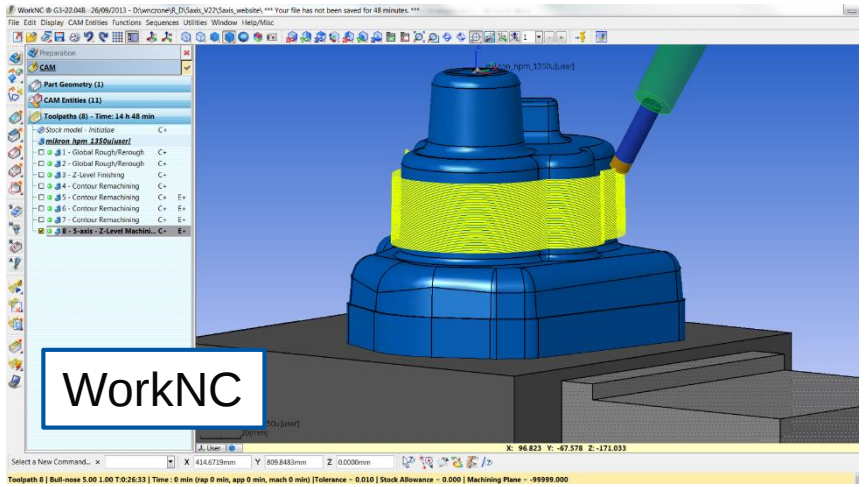

http://www.verosoftware.com/news/articles/Vero-Number-1-CAM-Business

Think manufacturing !

- Don’t hesitate to ask workshops
  - Reduce cost, time
  - Increase efficiency
- Valid 3D model
  - Smarteam ?
  - Strict control of consistency 2D/3D
- CAD @ CERN
  - EP/DT using CATIA CAM ➔ 2020 ?
  - Compatibility tests to be carried out

www.cern.ch