SRF R&D Program
CDR plan and status

O . Brunner (CERN) on behalf of all the WP participants

SRF R&D Program structure and collaborations

WP1: RF scenarios and parameter layout

WP2: Cavity design and beam-cavity interactions

WP3: Cavity material & performance

WP4: CERN-LNL-STFC Collaboration agreement on cavity material & cavity fabrication

WP5: Innovative cavity fabrication techniques

WP6: Cryomodule challenges

WP7: High efficiency klystron technology

WP8: Nb/Cu crab cavity for FCC_hh

WP9: Fundamental power couplers

Ongoing collaboration agreements:

- Rostock University
- Frankfurt University
- Geneva University
- Lancaster University
- FNAL
- JLAB
- BINP (in preparation)

Work Package structure and collaborations

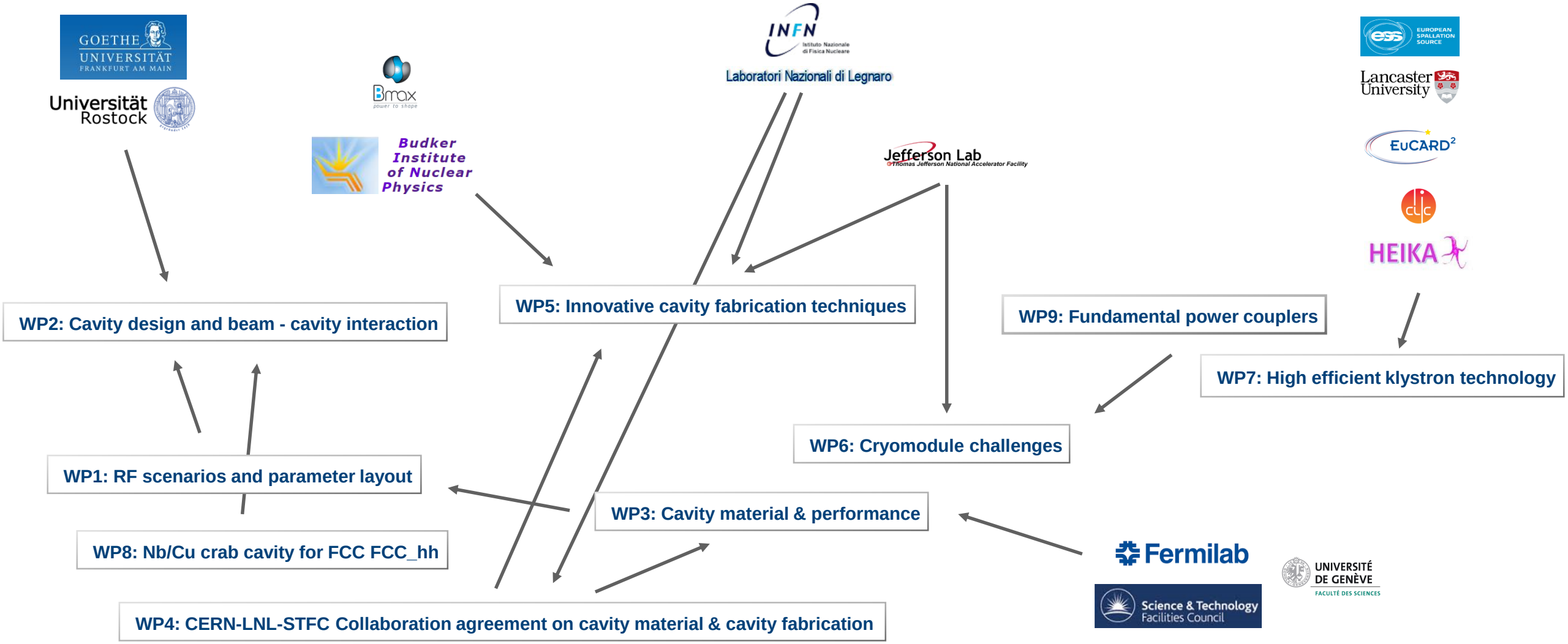

Framework of the study

“high current” machine

		V_tot (GV)	n_bunch	I_beam (mA)	σ (nm)	E_turnloss (GeV)
	FCC-hh	0.032		500		
FCC-ee	Z	0.4 / 0.2	30180 / 91500	1450	0.9/1.6	0.03
FCC-ee	W	0.8	5260	152	2	0.33
FCC-ee	H	3	780	30	2	1.67
FCC-ee	t	10	81	6.6	2.1	7.55

“high gradient” machine

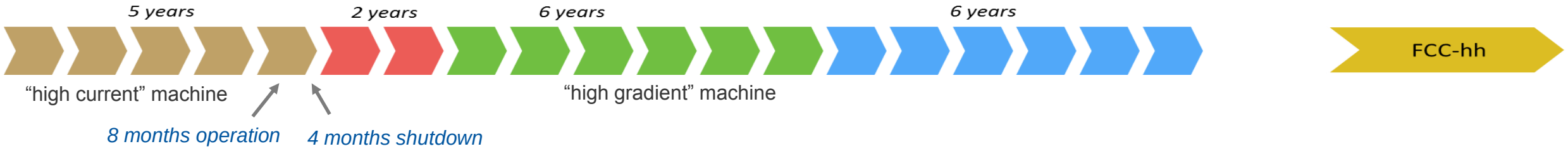

- Define “ideal” RF system for each machine
- Identify technology choices and R&D perspectives
- Propose optimum baseline scenario (fabrication, installation, cost)

RF scenarios and parameter layout

1. RF system model ✓
2. Layout optimization for each machine
   - Limiting factors ✓
   - Design choices and alternatives ✓
3. Baseline scenario
   - Timeline: installation and operation ✓
   - Optimized scenario and options ✓
4. Cost and study model ✓
5. Sensitivity study ✓

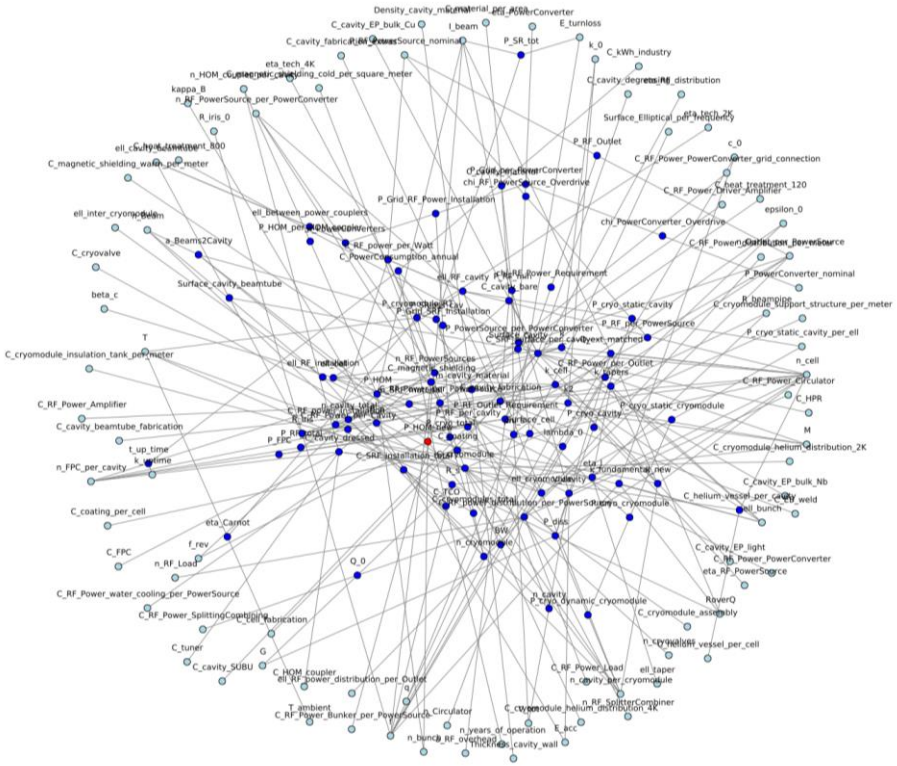

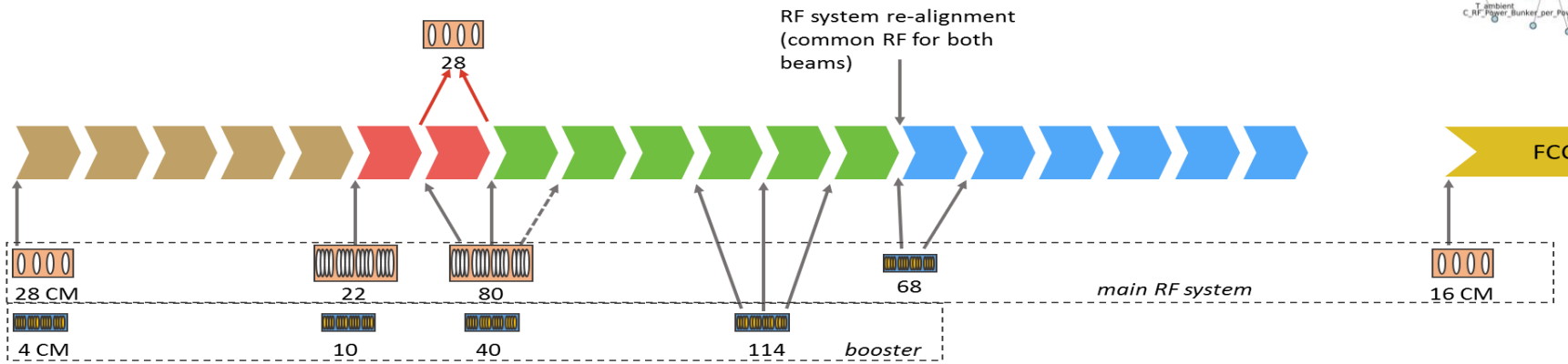

-> N. Schwerg 's talk (Tuesday)

Cavity design and beam-cavity interaction

1. Cavity design:
   - High energy
     - Aim at acceleration efficiency ✓
   - High intensity
     - Optimize cell shape with regard to HOMs ✓
     - HOM damping schemes ✓
2. Beam dynamics:
   - Single and coupled bunch stability ✓
   - Impedance studies & HOM power
   - Implications of 5 ns bunch spacing for the FCC-hh injector chain ✓
3. Analysis of the need for a RF harmonic system ✓
4. Low Level RF✓

Verification of the conformity of the RF structures within the stability limits

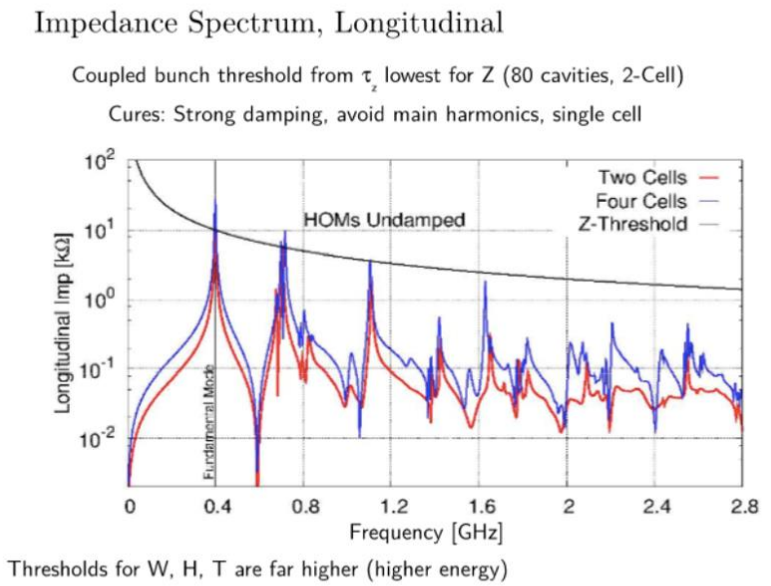

J. E. Muller, E. Chapochnikova, R. Calaga, S. G. Zadeh

->several talks in RF & FCC-hh machine design sessions on Tuesday

Cavity material & performance

Enhance collaborative effort to evaluate and understand the ultimate performance of the 400 - 800 MHz cavities

1. Review of technology choices and limits
   - *SRF Material Options for FCC (S. Aull et al., submitted to PRAB)* ✓
2. R&D and perspectives
   - Bulk Nb:
     - N_doping: (FNAL collaboration) ✓
   - Nb/Cu:
     - Development of innovative coating techniques (HIPIMS (CERN), HIPIMS & ECR (JLAB), ECR (FNAL)) ✓
     - Improvement surface preparation and Nb coating (CERN-LNL-STFC collaboration) ✓
     - Characterization facility and benchmarking (STFC) ✓
   - Alternative materials A15, strong potential - long term R&D
     - Nb_3Sn on Nb (FNAL collaboration) ✓
     - Nb_3Sn on Cu ✓
     - V_3Si ✓
   - Characterization facility and benchmarking (STFC, UNIGE, CERN) ✓

Nb/Cu R&D program

A15 R&D program

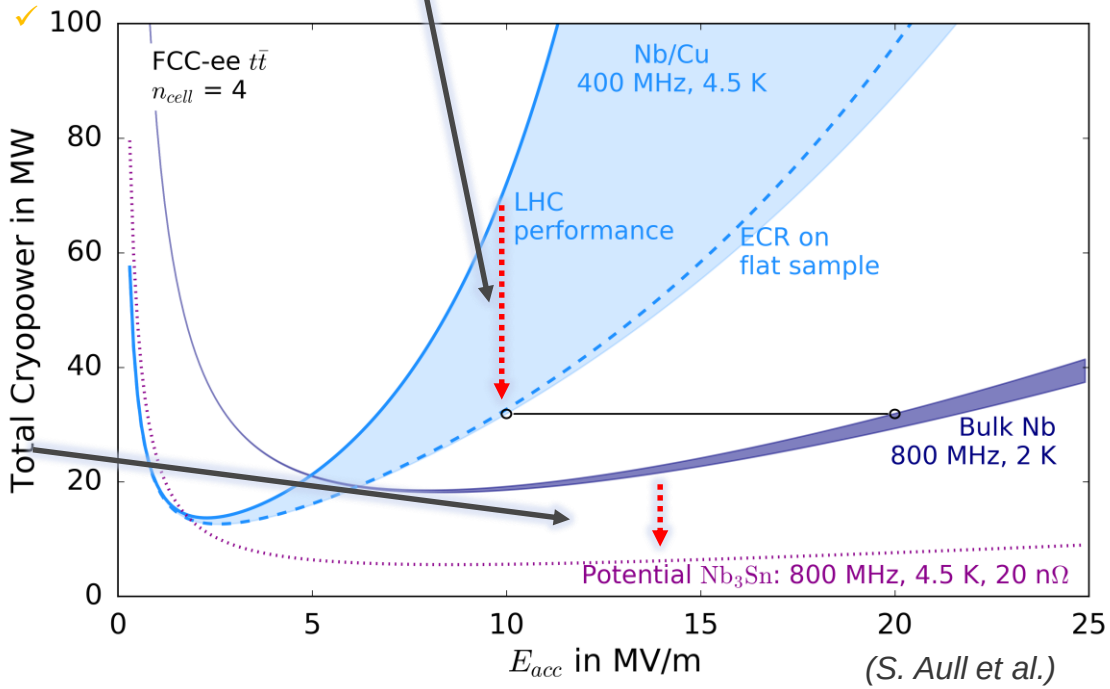

(S. Aull et al.)

several talks in RF sessions 2 & 4 (Tuesday)

Innovative cavity fabrication techniques

Development of fast & cost effective cavity fabrication techniques

1. High velocity hydroforming:
   - Determine forming limits of high-velocity Electro-Hydraulic Forming (EHF) for Cu structures as substrate for superconducting coating (and for bulk Nb) ✓
2. Spinning:
   - Efforts towards seamless cavity fabrication (LNL) ✓
3. Surface treatment: Electro-polishing:
   - Developments on vertical and/or horizontal EP for 400/800MHz copper cavities ✓

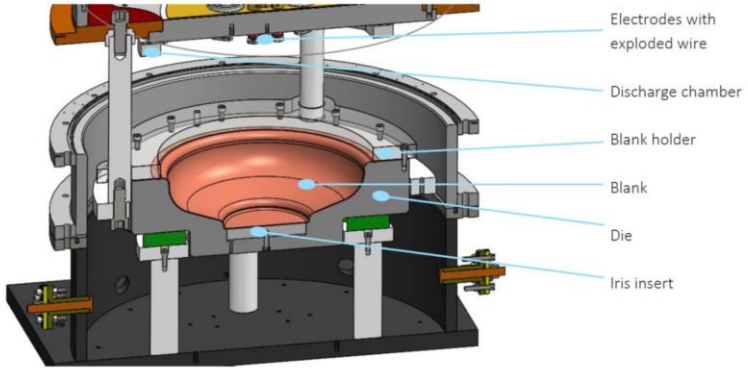

C. Abajo Clemente & Bmax, 2017

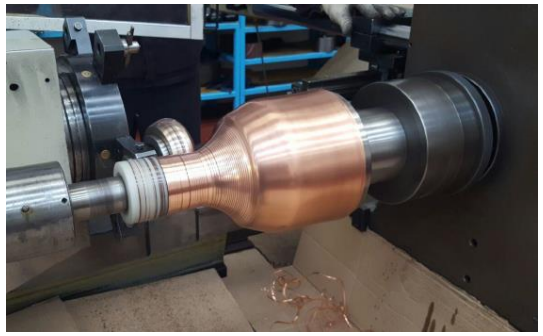

E. Palmieri (LNL), FCC week 2016

WP6: Cryomodule challenges

1. Specific topics of interest for FCC (and many other machines!)
   a. Modular CM design approach to hold various different cavities✓
   b. Impact of cooling control on CM design ✓
   c. Optimisation of clean room assembly procedures ✓
   d. CM cost model ✓

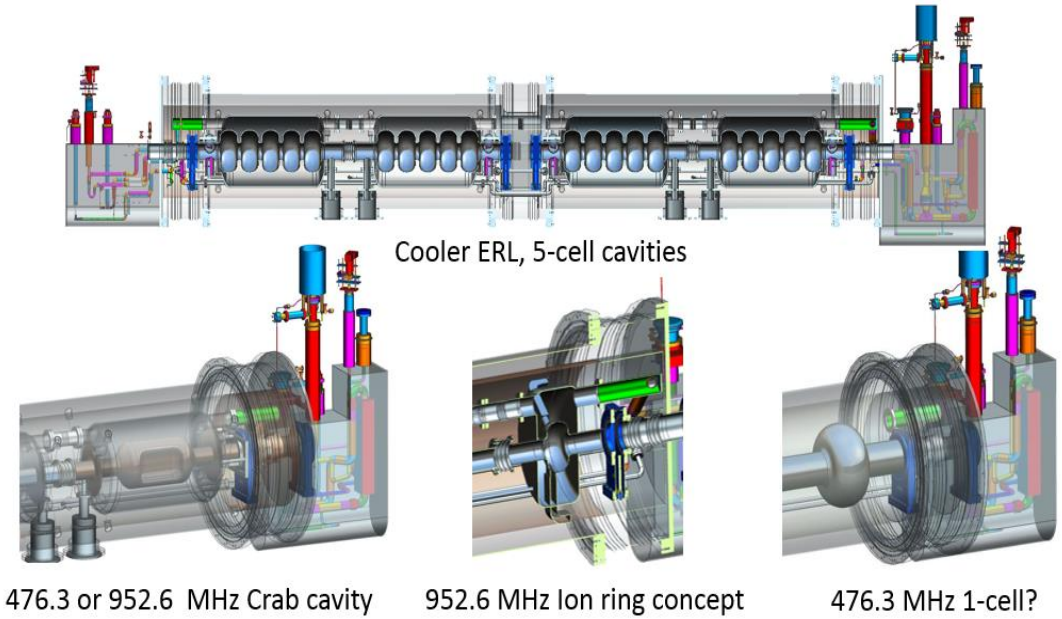

R. Rimmer (JLAB), FCC week 2016

R. Rimmer 's talk on Tuesday

High efficiency klystron technology

FCC: 100MW beam power ≈ 165 MW grid power
=> every 1 % gain in efficiency ≈ 10 GWh/year (≈ 0.4M€/year)

Single beam, 1.4 MW, 0.8 GHz, 133.9 kV, 12.551 A, μ K=0.263

85.7% in PIC simulations

1. Development of new klystron bunching technologies to strongly increase RF power production efficiency was initiated at CERN in 2013 (HEIKA) ✓
2. Fabrication of the first high efficiency CSM tube ✓

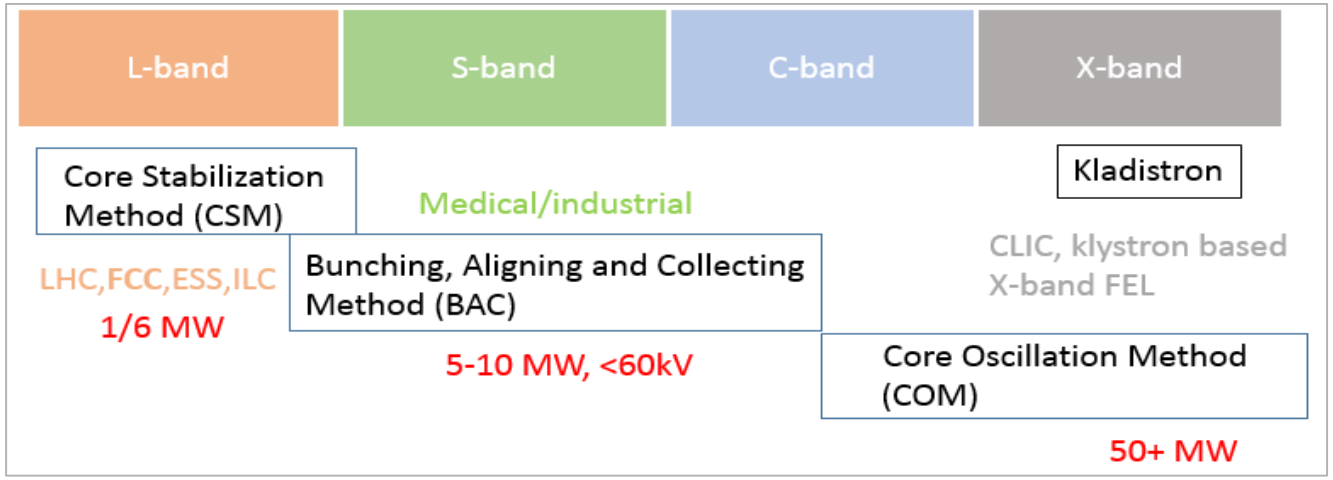

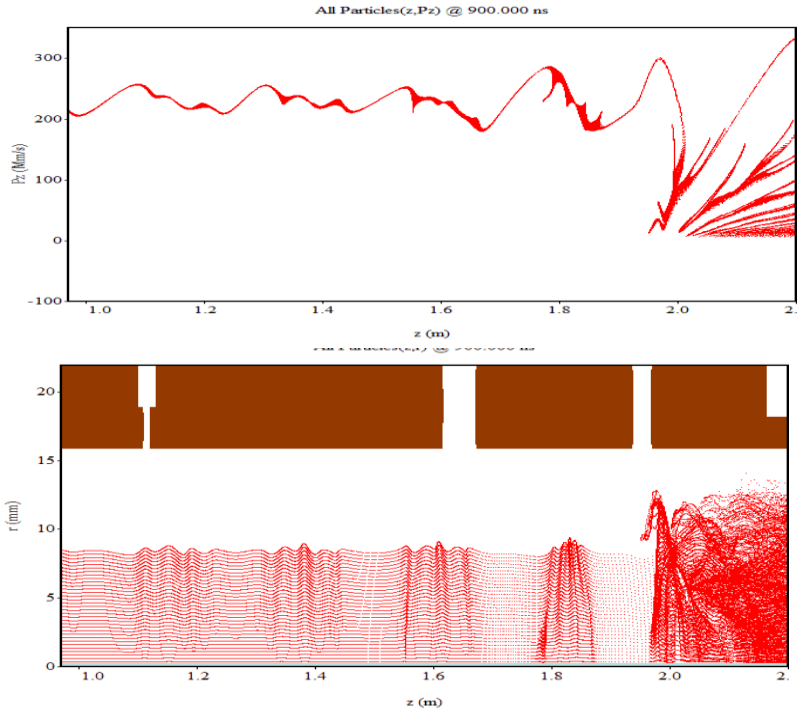

HEIKA: High Efficiency International Klystron Activity
CSM: Core Stabilization Method

See I. Syratchev's talk on Tuesday

Innovative crab cavity design for FCC_hh

- Very interesting development which provides:
  - low longitudinal and transverse impedances
  - natural damping for HOMs

1. Design and simulation ✓
2. Fabrication is ongoing ✓
3. Nb coating system is under development ✓

	FCC-hh
RF frequency [MHz]	400
Total voltage V [MV]	18 (uncertainty ±20%)
Available length [m]	20
Beam separation [mm]	250 (maybe 204 soon)
Average beta in the ring [m]	(339+67)/2 = 203
Beta* [m]	0.3
Crossing angle [urad]	89
Beta at CC location [m]	10100 ÷ 10900

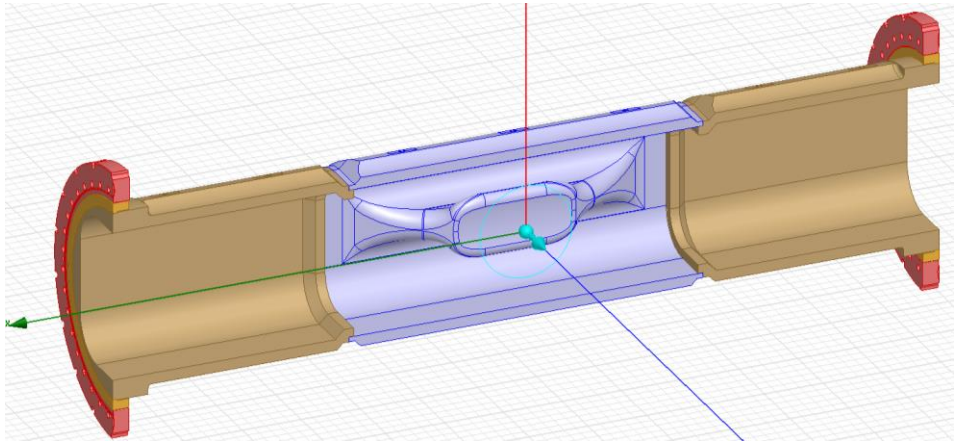

Schematic layout:
E. Cruz-Alaniz,
Nov. 2016, Barcelona

See R. Calaga 's talk on Tuesday

Fundamental power couplers

Impedance reduction is crucial
-> minimize the number of cavities
-> more power per FPC (beyond the S-o-A)

1. Very high CW power FPC (1MW?)
2. Variable and Adjustable FPC
   - Adaptable to different Q_{ext}
3. Large series production

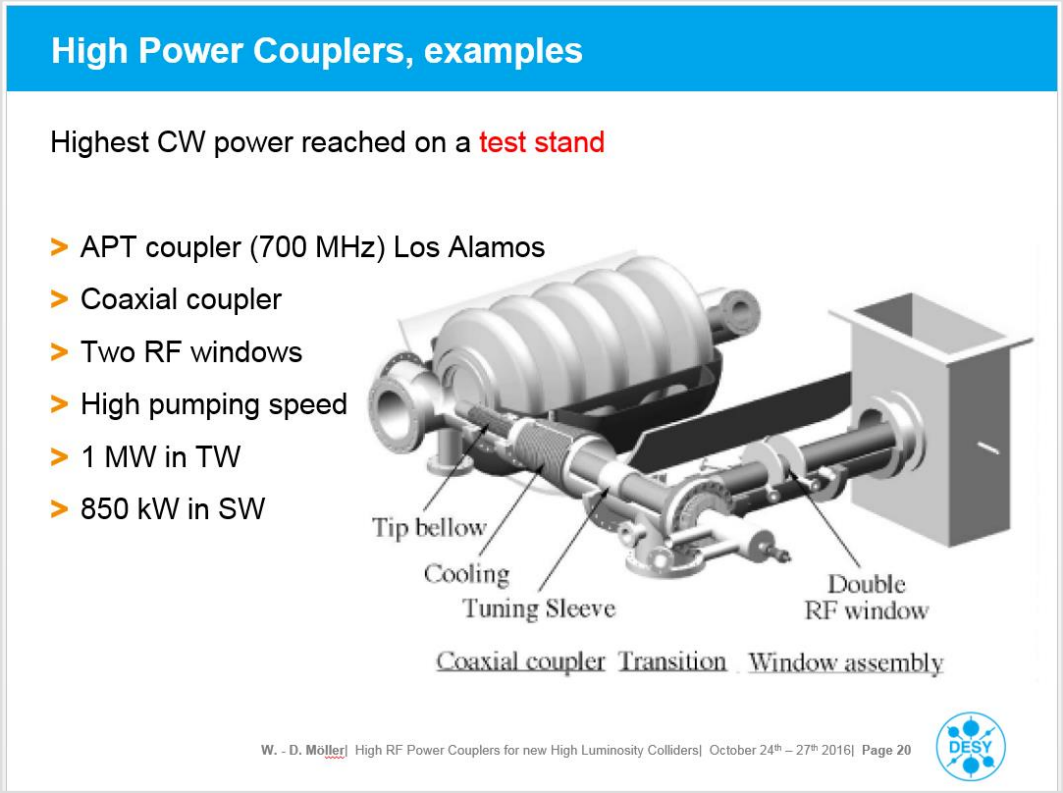

See E. Montesinos 's talk on Tuesday

Conclusions

- A complete SRF R&D program
- A “solid” baseline scenario has been selected
- R&D challenges and limits have been defined
- The way is paved for the study and the CDR to go off smoothly

Skeleton of CDR

SRF R&D: FCC_ee	SRF R&D: FCC_hh (HE-LHC}
1. **Introduction** 2. **Staging and RF configuration (incl. booster)** 3. **Cavity design and optimization** • High currents • HOM damping • High energies • Acceleration efficiency 4. **Beam Dynamics** • Single bunch instabilities • Multi-bunch instabilities • Impedance studies 5. **Cavity material & performance** • Technology choices and limits • R&D and perspectives 6. **Innovative cavity fabrication techniques** 7. **Cryomodule challenges** 8. **High efficiency power sources** 9. **Fundamental power couplers** 10. **Conclusion**	1. **Introduction** 2. **RF system and parameters** • RF system design and layout • RF power optimization 3. **Beam dynamics challenges and limits** • 25 ns bunch spacing • 5 ns bunch spacing option 4. **Analysis of the need for a RF harmonic system** 5. **Low impedance deflecting cavities** 6. **An ERL as an option for e-injection** 7. **Conclusion**

CERN

www.cern.ch