RF System Design for CEPC

Jiyuan Zhai

On behalf of the CEPC SRF WG

中国科学院高能物理研究所
Institute of High Energy Physics
Chinese Academy of Sciences

FCC Week, 30 May 2017, Berlin

Outline

- CEPC introduction
- RF system design and parameters
- RF transient and instability
- R&D plan and status

CEPC Main Ring (MR)

What's NEW since Pre-CDR in 2015

- Circumference: 54 km → 100 km
- Ring type: Single Ring (pretzel, head-on) → Partial Double Ring (1+1 bunch train, crab waist) → Advanced Partial Double Ring (4 + 4 bunch trains; *alternative*) → Double Ring (*baseline*)
- RF System: high RF voltage (5-cell), high HOM power, uniform fill, low lumi. Z → low RF voltage (2-cell), modest HOM power, bunch train gap, heavy beam loading (high lumi. Z)

Luminosity Goal (per IP):

Higgs > 2.0×10^{34} cm^{-2} s^{-1}

W & Z > 1.0×10^{34} cm^{-2} s^{-1}

SR power / beam < 30 (50) MW

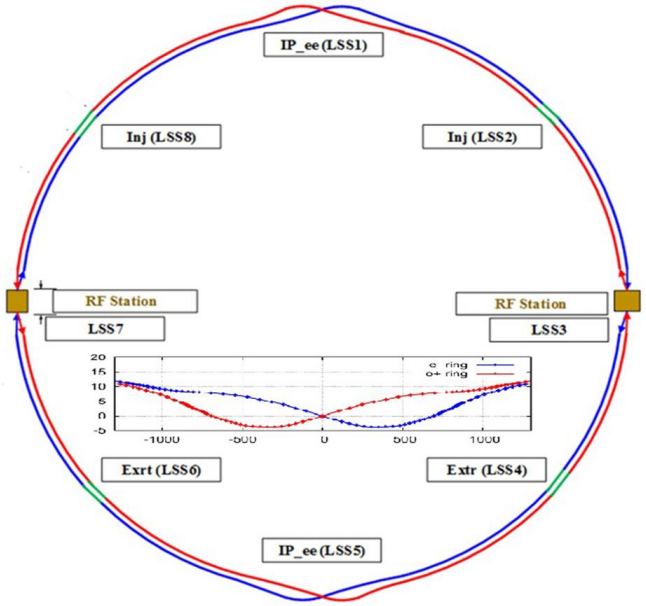

Parameters of CEPC Double Ring (MR)

Wang Dou 20170306	***Higgs***	***W***	***Z***
Number of IPs	2	2	2
Energy (GeV)	120	80	45.5
SR loss/turn (GeV)	1.67	0.33	0.034
Half crossing angle (mrad)	16.5	16.5	16.5
Piwinski angle	3.19	5.69	4.29
N_e/bunch (10^{11})	0.968	0.365	0.455
Bunch number	**412**	**5534**	**21300**
Beam current (mA)	19.2	97.1	465.8
SR power /beam (MW)	**32**	**32**	**16.1**
Bending radius (km)	11	11	11
Momentum compaction (10^{-5})	1.14	1.14	4.49
β_{IP} x/y (m)	0.171/0.002	0.171 /0.002	0.16/0.002
Emittance x/y (nm)	1.31/0.004	0.57/0.0017	1.48/0.0078
Transverse σ_{IP} (um)	15.0/0.089	9.9/0.059	15.4/0.125
ξ_x/ξ_y/IP	0.013/0.083	0.0055/0.062	0.008/0.054
RF Phase (degree)	128	126.9	165.3
V_{RF} (GV)	2.1	0.41	0.14
f_{RF} (MHz) (harmonic)	650	650 (217800)	650 (217800)
Nature σ_z (mm)	2.72	3.37	3.97
Total σ_z (mm)	2.9	3.4	4.0
HOM power/cavity (kw)	0.41(2cell)	0.36(2cell)	1.99(2cell)
Energy spread (%)	0.098	0.065	0.037
Energy acceptance (%)	1.5		
Energy acceptance by RF (%)	2.1	1.1	1.1
n_γ	0.26	0.15	0.12
Life time due to beamstrahlung (min)	52		
F (hour glass)	0.96	0.98	0.96
L_{max}/IP (10^{34}cm^{-2}s^{-1})	**2.0**	**5.15**	**11.9**

Luminosity upgrade (RF related):

HL-H:

SR power 32 MW → 50 MW

Increase bunch number → higher input power per cavity

HL-Z:

SR power 16 MW → 50 MW

limited by the HOM power per cavity (2 kW), input coupler power per cavity (400 kW) and beam loading, and bunch spacing requirement from detector (> 10 ns) → KEKB/BEPCII type cavity

HE:

Add hign gradient, high Q 5-cell cavities (two ring shared)

Outline

- CEPC introduction
- RF system design and parameters
- RF transient and instability
- R&D plan and status

Yiwei Wang, Chenghui Yu

CEPC RF Layout (one RF section)

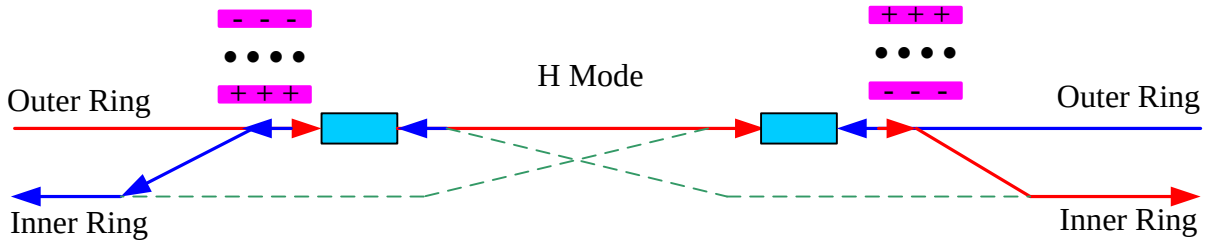

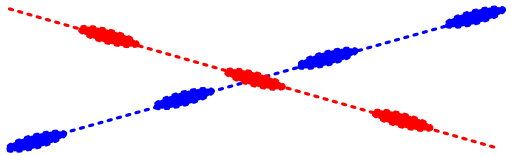

Horizontal Crossing
Longitudinal separation

Park (detune) the unused cavities for W & Z operation (or use lattice by-pass, or push the unused cavities off-line for Z).

- H: high RF voltage, low current
- W & Z: low RF voltage, high current
- Two RF sections in total
- Two RF stations per RF section
- 14 modules per RF station
- Six 2-cell cavities per module

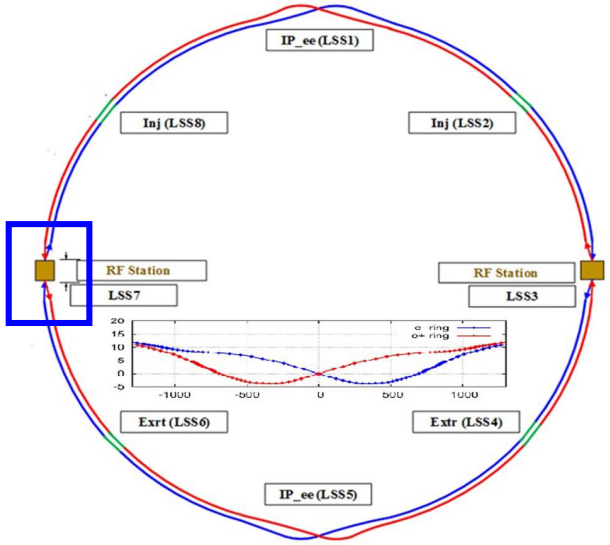

H: shared cavities for two rings (half fill). W & Z: separate cavities for two rings (“uniform” fill). Fewer cavities for H, lower current seen by the W & Z cavity, lower impedance for W & Z.

CEPC Main Ring SRF Parameters (1)

ZJ20170410 Main Ring parameter: WD20170306	H	W	Z
Luminosity / IP [10^{34} $cm^{-2}s^{-1}$]	**2**	**5**	**12**
SR power / beam [MW]	**32**	**32**	**16**
RF voltage [GV]	2.1	0.41	0.14
Beam current / beam [mA]	**19.2**	**97.1**	**466**
Bunch charge [nC]	15.5	5.8	7.3
Bunch length [mm]	2.9	3.4	4
Cavity number in use / beam (650 MHz 2-cell)	**336**	96	48
Gradient [MV/m] (with margin for HV-H)	14	9.3	6.3
Input power / cavity [kW] (with margin for HL-H)	190	333	335
Klystron power [kW] (2 cavities / klystron)	800	800	800
HOM power / cavity [kW]	0.4	0.3	**1.8**
Cryomodule number (6 cavities / module)	56	32	16
Q_0 @ 2 K at operating gradient (long term)	1E10	1E10	1E10
Total wall loss @ 4.5 K eq. [kW]	23	6	1

- **No staging (except super-Z and higher energy).**
- **Same RF cavity for H, W, Z.**
- **No cavity push-pull.**

Challenging input power, low heat load, input coupler short to reduce module diameter

Cavity acceptance Q_0 > 4E10 (N-doping), Module horizontal test > 2E10 (clean assembly and magnetic hygiene)

CEPC Main Ring SRF Parameters (2)

ZJ20170410 Main Ring machine parameter: WD20170306	H	W	Z
Optimal Q_L	1.0E6	2.7E5	1.2E5
Relative optimal Q_L (to H)	1.0	0.1	0.12
Extra power (if fixed optimal coupling for H)	0	209 %	155 %
Cavity bandwidth [kHz]	0.7	2.4	5.3
Optimal detuning [kHz]	0.2	0.9	10.5
Cavity time constant [μs]	488	130	60
Cavity stored energy [J]	46	22	10
Max relative voltage drop for **1 %** beam gap	0.9 %	3.3 %	23.2 %
Max phase shift for **1 %** beam gap [deg]	0.8	3.2	13.7
Max relative voltage drop for 4+4 APDR	10 %	77 %	decelerate
Max bunch train phase shift for 4+4 APDR [deg]	9.8	74	decelerate

Variable coupler needed for W&Z, and even for Higgs itself to save power.

Heavy beam loading → damp acceleration mode CBI instability during injection and top-up operation

Even 1 % beam gap will have large bunch phase shift → change fill pattern from one long gap to many small gaps

Alternative APDR (4+4 trains) scheme may not work unless phase shift corrected by beat cavity or other method.

CEPC Booster SRF Parameters (preliminary)

ZJ20170410. 10 GeV injection. Booster machine parameter: CX20170401	H	W	Z
Extraction beam energy [GeV]	120	80	45.5
Bunch charge [nC]	0.77	0.2	0.3
Beam current [mA]	**0.37**	**0.33**	**0.96**
Extraction RF voltage [GV]	**2.8**	**1**	**0.4**
Extraction bunch length [mm]	4.7	2.8	1
Cavity number in use (**1.3 GHz TESLA 9-cell**)	**160**	64	32
Gradient [MV/m]	16.9	15.1	12.0
Q_L	2E+07	2E+07	2E+07
Cavity bandwidth [Hz]	**65**	**65**	**65**
Input power per cavity [kW] (remained detuning 10 Hz)	5.8	4.0	2.5
SSA power [kW] (one cavity per SSA)	**10**	**10**	**10**
HOM power per cavity [W]	0.4	0.2	1.6
Cryomodule number in use (8 cavities per module)	20	8	4
Q_0 @ 2 K at operating gradient (long term)	**2E+10**	**2E+10**	**2E+10**
Total wall loss @ 4.5 K eq. [kW] (assume CW)	8.4	2.7	0.9

Narrow bandwidth, microphonics

Voltage ramp 12 times in 1 s

LLRF challenge

Outline

- CEPC introduction
- RF system design and parameters
- RF transient and instability
- R&D plan and status

Beam Gap Transient

- **Phase shift caused by beam gap in DR or APDR**
  - A bunch extracts cavity stored energy when passing through, and power source will recover the cavity voltage when the next bunch comes. When the bunch spacing is much smaller, cavity stored energy and voltage will drop continuously due to lack of power. The latter bunch will move towards voltage peak by auto-phasing, resulting in less longitudinal focusing, smaller energy acceptance, lifetime and luminosity, and possible other dynamical problem. Small phase shift can be estimated by (K. Bane, etc., EPAC96):

$$\Delta\theta_{1N} \approx \frac{-2kq}{V_{c0}\sin\phi_0}\left[\frac{T_{\mathrm{t}}T_{\mathrm{g}}/T_{\mathrm{b}}}{T/N_{\mathrm{t}}}\right] \approx \frac{-2kI_0T_g}{V_{c0}\sin\phi_0} \approx \frac{-2kqN}{V_{c0}\sin\phi_0}$$

Max phase variation proportional to number of bunches in a bunch train, or number of bunch trains (for fixed total bunch number) or the gap length.

- **Correction methods**
  1. **Increase cavity stored energy** (less cell number, higher RF voltage, low RF freq)
  2. **More uniform distribution** (increase bunch train number or length)
  3. **Pulsed power** (power source hardware limit and low RF-to-beam efficiency)
  4. **Beat cavity** (small frequency shift of part of RF sources and cavities, beating)

Refer to talks in the CEPC-SPPC Workshop, Apr. and Sept. 2016
http://indico.ihep.ac.cn/event/5277/session/9/contribution/45/material/slides/
http://indico.ihep.ac.cn/event/6149/session/2/contribution/55/material/slides/

Phase shift not trivial for double ring W & Z with 1 % ~ 5 % gap to mitigate ion-trapping and fast beam ion instability (FBII) → Cure by using many short bunch trains. APDR phase shift → Cure by beat cavity

Phase Shift of Z-pole Beam Gap

1% long gap： $\Delta\theta_{\max} = 13.82\,\mathrm{deg}$ Same with Wilson formula.

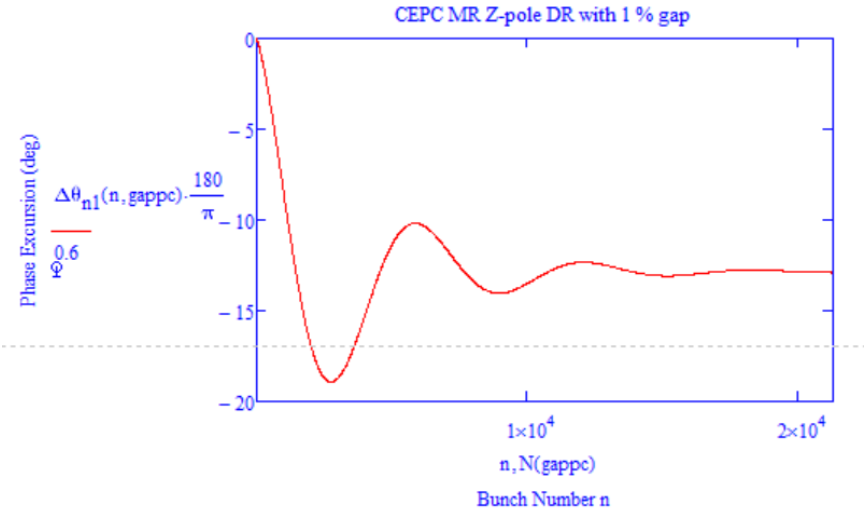

$$V_b^n = -\frac{2kq}{1-e^{i\bar{\theta}_b}}\left(1-\frac{\sin\frac{1}{2}N_g\bar{\theta}_b}{\sin\frac{1}{2}(N+N_g)\bar{\theta}_b}e^{i(n-N/2)\bar{\theta}_b}\right)$$

Bane's formula (plot by Haipeng Wang's Mathcad code)

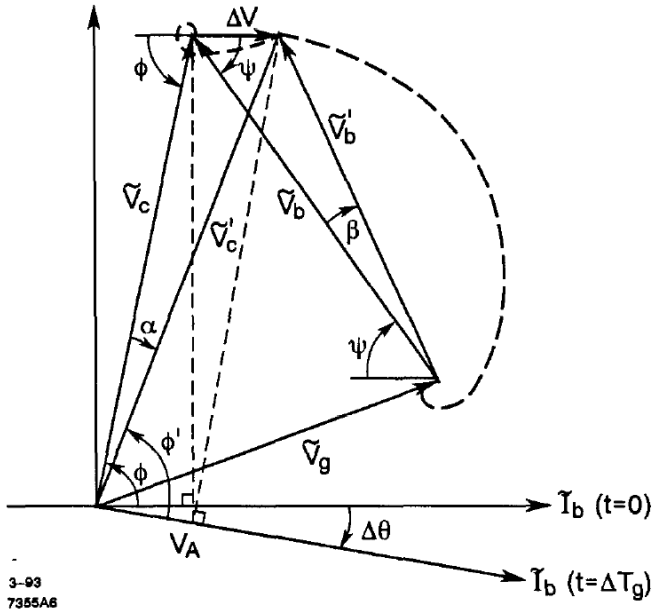

1065 trains, 20 bunches each (T_g = 195.7 ns, T_b = 6.15 ns)

$$\Delta\theta_{1N} = 0.76\,\mathrm{deg}$$

$$\Delta\theta = \alpha + (\phi' - \phi)$$

$$\approx \frac{\Delta V}{V_c}\sin\phi + \left[(\tan^2\phi + 2\frac{\Delta V}{V_c}\cos\phi)^{1/2} - \tan\phi\right]$$

P.B. Wilson. SLAC-PUB-6062,1993

Z

Beam Transient Effect in Cavity (Z)

V_c = 2.92 MV ϕ_s = 75.9 deg.

I_b = 466 mA

Q_0 = 1.00E10 , Q_L = 1.2E5 , R/Q = 213 Optimum Δf = -10.7 kHz

Beam Loading Factor ($|V_b|/|V_c|$) : $P_b/P_c/\beta = I_b \times R/Q \times Q_L/V_c \sim 4.05$ (at crest)

w/o FB-control (constant driving)

Phase

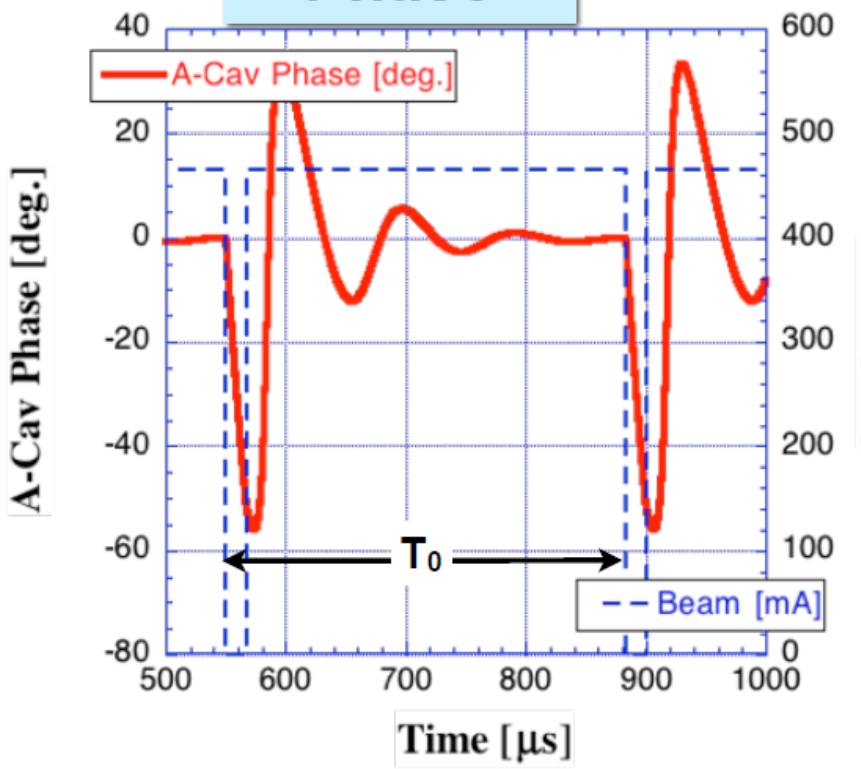

Amplitude

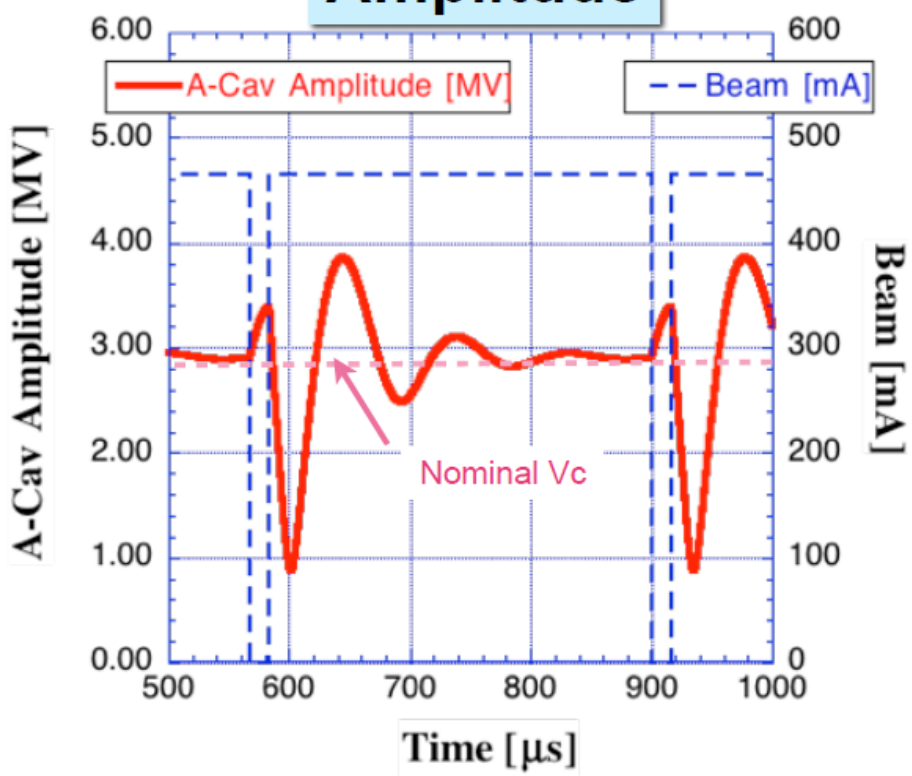

5 % Gap

T. Kobayashi (KEK)

Z

Beam Transient Effect in Cavity (Z)

w/ RF(I/Q) FB-control

BW = 10 MHz

P_{gain} = 600

I_{gain} = 1E6 [1/s]

Loop Delay = 2 [us]

Phase

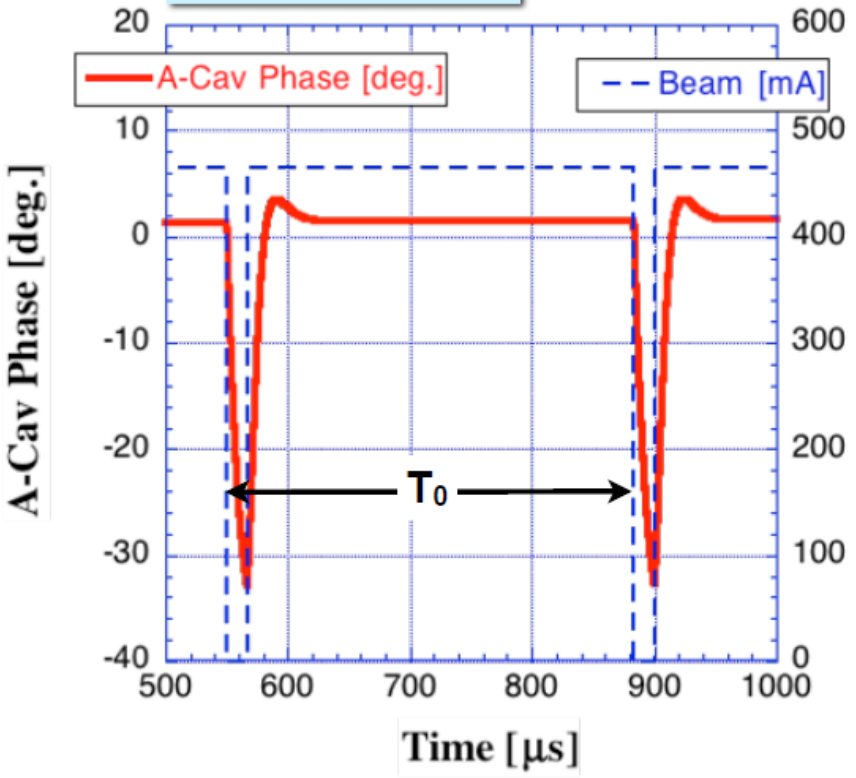

Amplitude

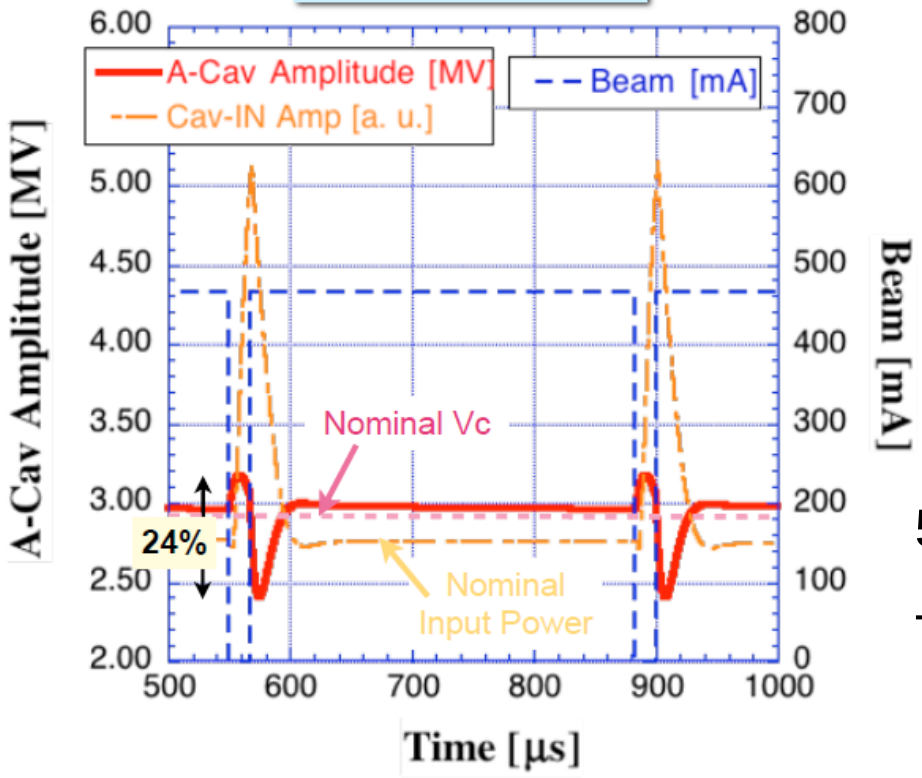

5 % Gap

T. Kobayashi (KEK)

Phase Compensation with Beat Cavity

- Tune freq of some RF sources and cavities slightly different from the normal RF sources (650 MHz) and cavities (optimal detuning) – beating
- Use linear part of beat wave to compensate voltage and phase variation due to beam loading (non-linearity increases with train length, max. half-fill of the ring)
- Higher order beats are more effective but more non-linear

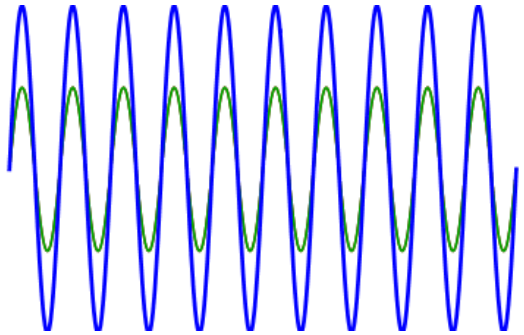

$$f_{DF} = f_{RF} \pm mN_{\mathrm{t}} f_{\mathrm{rev}}$$

K. Kubo etc. Compensation of bunch position shift using sub-RF cavity in a damping ring, PAC93

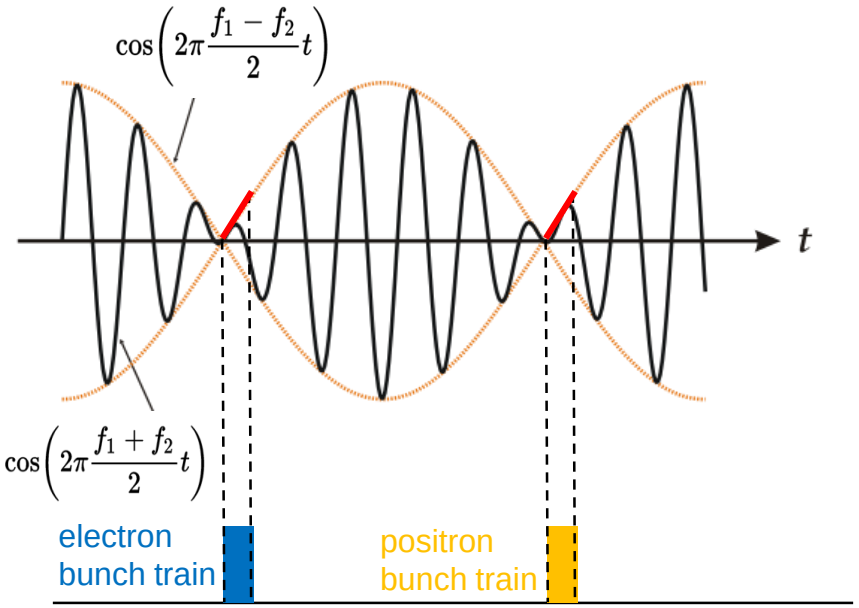

bunch train freq = train # x revolution freq = beat freq / *m*

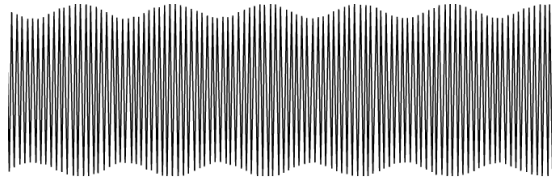

Number of beat cavities:

$$N_{\mathrm{BFC}m} = \frac{\Delta V_{\mathrm{RF}}}{2V_{\mathrm{BFC}}\ \sin(mN_{\mathrm{t}}\omega_{\mathrm{rev}}T_{\mathrm{t}})}$$

APDR Phase Correction with Beat Cavity

Machine Parameter： wangdou20160918/23（Circumference 61 km）	H Low Power	H High Lumi	W	Z	Z 1-cell
Bunch charge (nC)	32	32	18.6	12.5	12.5
Bunch number (one beam)	70	107	400	1100	1100
Bunch spacing (ns) [bunch train length < 3.2 km]	152.3	98.5	26.2	9.2	9.2
Cavity voltage (MV)	7.4	7.3	3.9	3.7	3.7
Synchrotron phase (deg)	123	122	128	146	146
PDR 1+1 max voltage drop	11 %	18 %	72 %	140 %	70 %
PDR 1+1 max phase shift (deg)	12	19	67	/	49
PDR 3rd order beat cavity# (29 kHz)	33	51	83	28	14
APDR 4+4 max voltage drop	3 %	4 %	18 %	35 %	18 %
APDR 4+4 max phase shift (deg)	3	4.8	16.7	24.2	12.1
APDR 2nd order beat cavity# (79 kHz)	10	16	27	9	4

Pulsed Power Correction

Constant amplitude and phase of the cavity voltage.
To avoid complicated Lorentz force detuning correction in ring.

$$\Delta f_{\text{opt}} = -\frac{f_0 \frac{R}{Q} I_b}{2V_c} \sin\varphi_s$$

$$Q_{\text{L.opt}} = \frac{V_c}{\frac{R}{Q} I_b \cos\varphi_s}$$

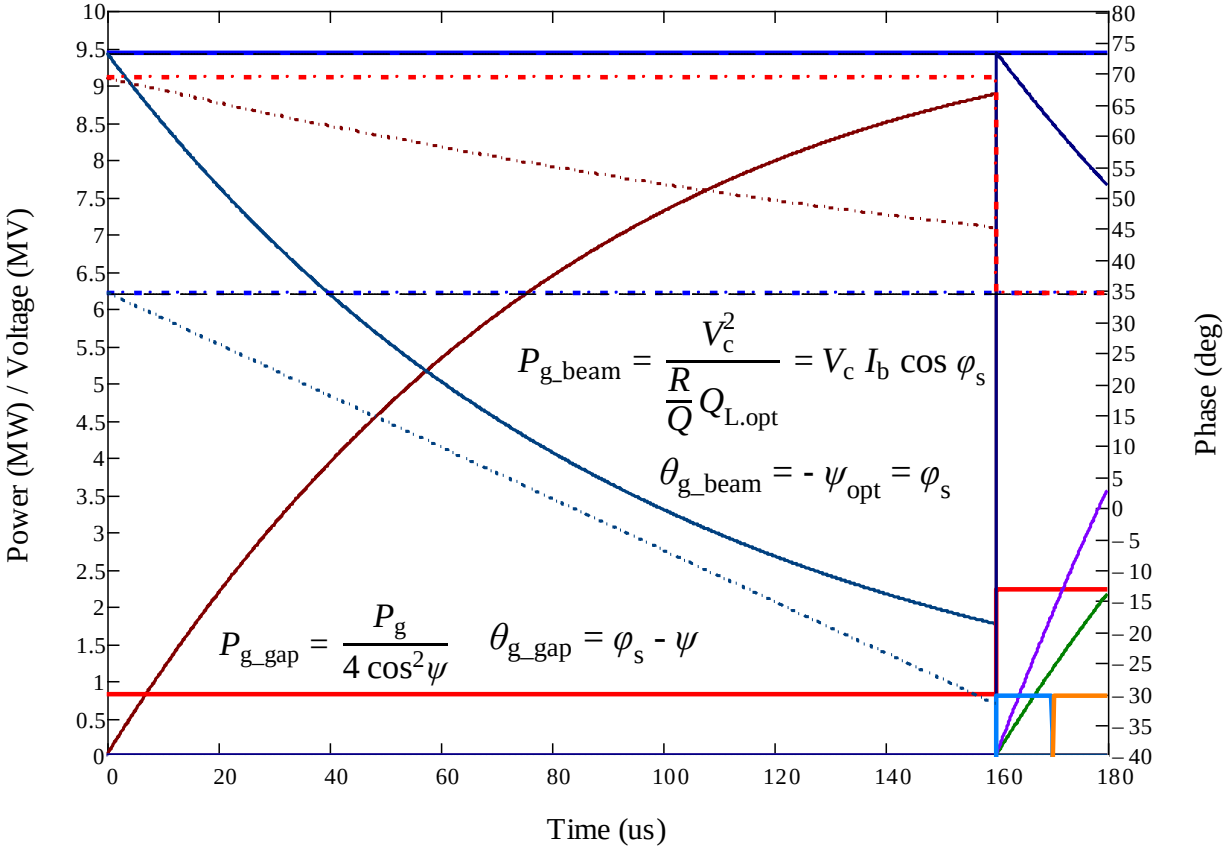

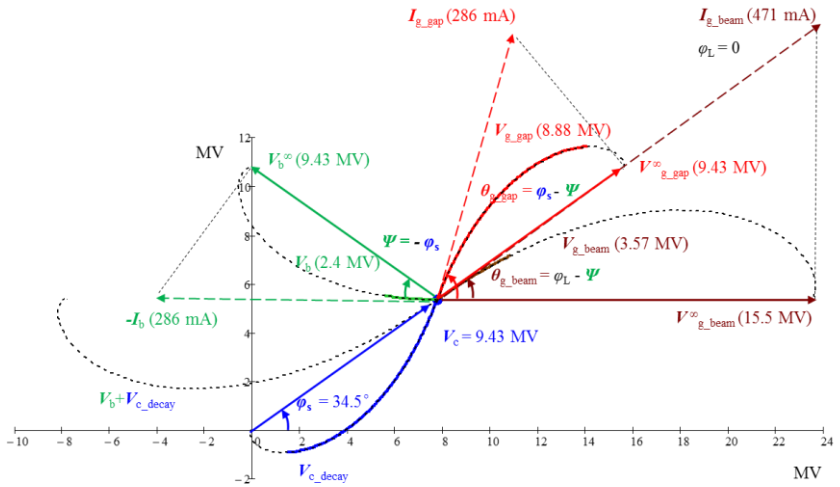

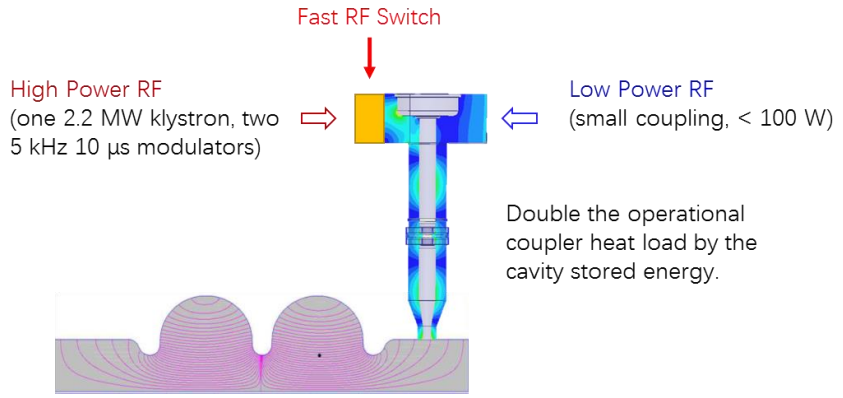

Robinson Stability (CEPC DR Z mode)

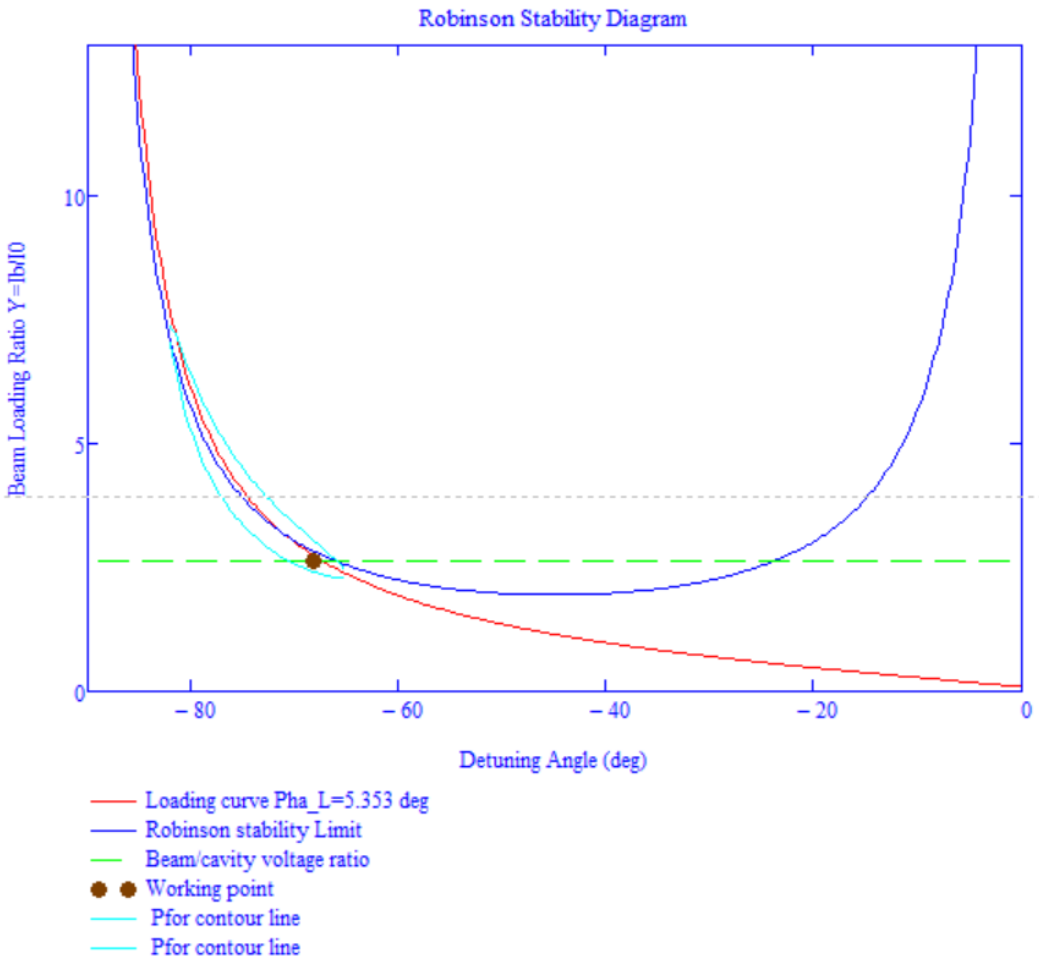

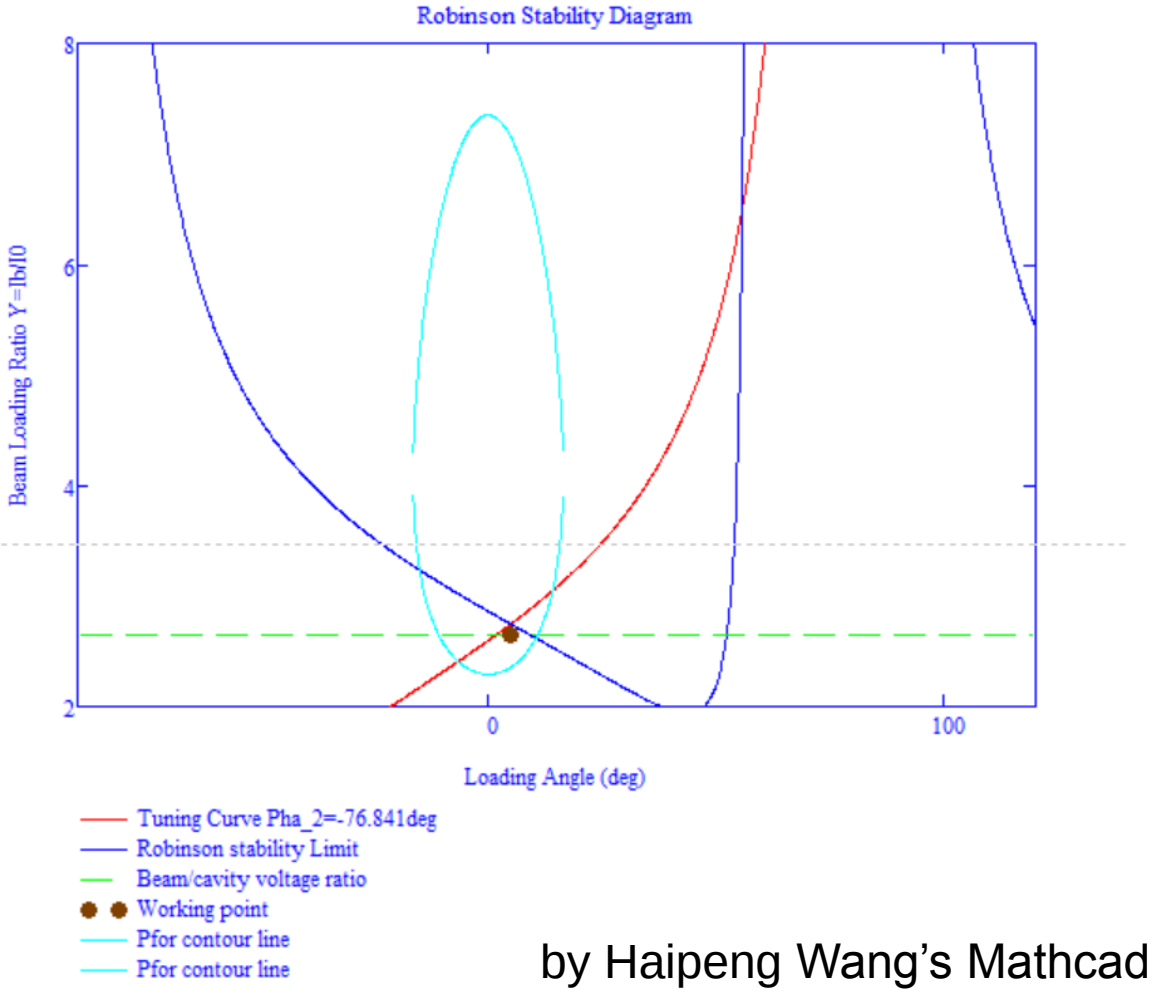

by Haipeng Wang's Mathcad code

- Fast direct feedback (group delay 2 us, loop gain 22).
- ~ 10 % more power to have Robinson stable operation of high current Z-pole.

Fundamental Mode Instability of Z-pole

Fundamental mode CBI of Z-pole due to large circumference (small revolution frequency, low RF voltage) and high current (large cavity bandwidth and detuning, input coupler power limit).

For M bunches, there are M coupled-bunch modes, the phase shift between adjacent bunches for mode number n:

$$\mathrm{D}f_n = \frac{2p}{M} n \qquad n = 0, 1, 2, \ldots M\text{-}1$$

CBI growth rate :

$$\tau_\mu^{-1} = \frac{I_b \alpha_c}{2\nu_s E_s} \cdot \sum_{p=0}^{\infty} \left[f_p^{\mu+} \,\mathrm{Re}\, Z^{\parallel}\left(f_p^{\mu+} \right) - f_p^{\mu-} \,\mathrm{Re}\, Z^{\parallel}\left(f_p^{\mu-} \right) \right]$$

$$f_p^{\mu+} = (pM + \mu) f_0 + f_s$$

$$f_p^{\mu-} = [(p+1)M - \mu] f_0 + f_s$$

Kouki Hirosawa. PASJ2016 TPU012

Fundamental Mode Instability of Z-pole

Longitudinal coupling-impedance

$$Z^{\parallel}(f) = \frac{1}{\beta}\frac{R_{sh}/2}{1 + iQ_L\left(\frac{f}{f_{res}} - \frac{f_{res}}{f}\right)}$$

Cavity resonance frequency

$$f_{res} = f_{rf} + \Delta f \qquad \Delta f_{opt} = -\frac{I_b \sin f_s \frac{R}{Q} f_{RF}}{2V_c}$$

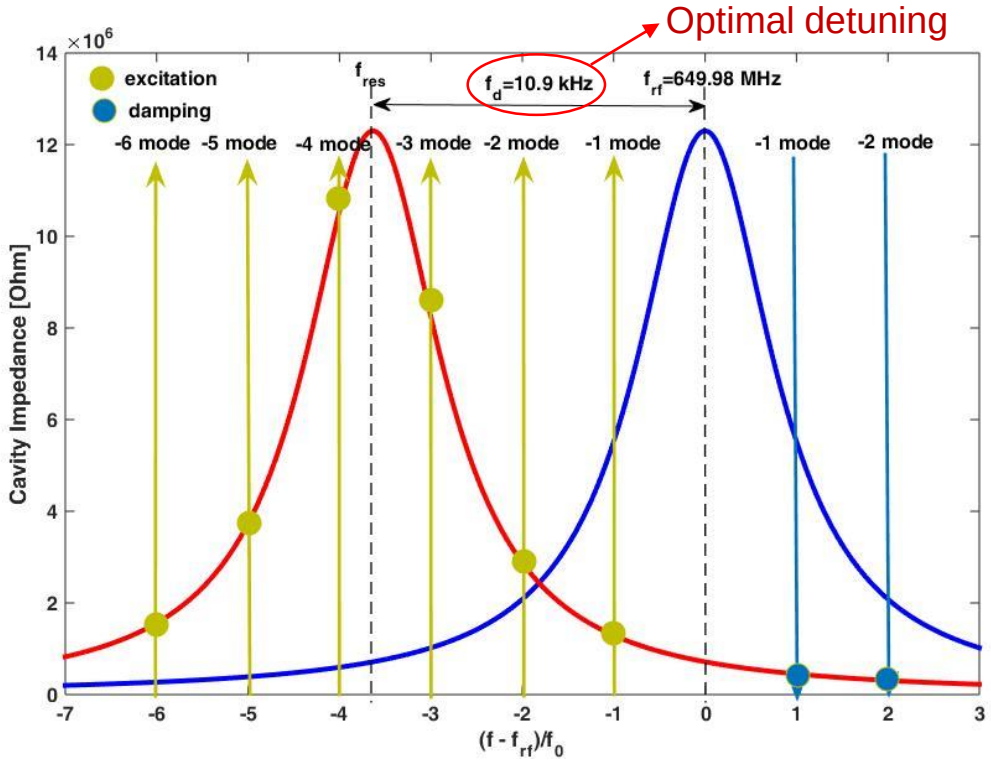

Cavity acceleration mode impedance and beam spectrum of CEPC Z-pole mode

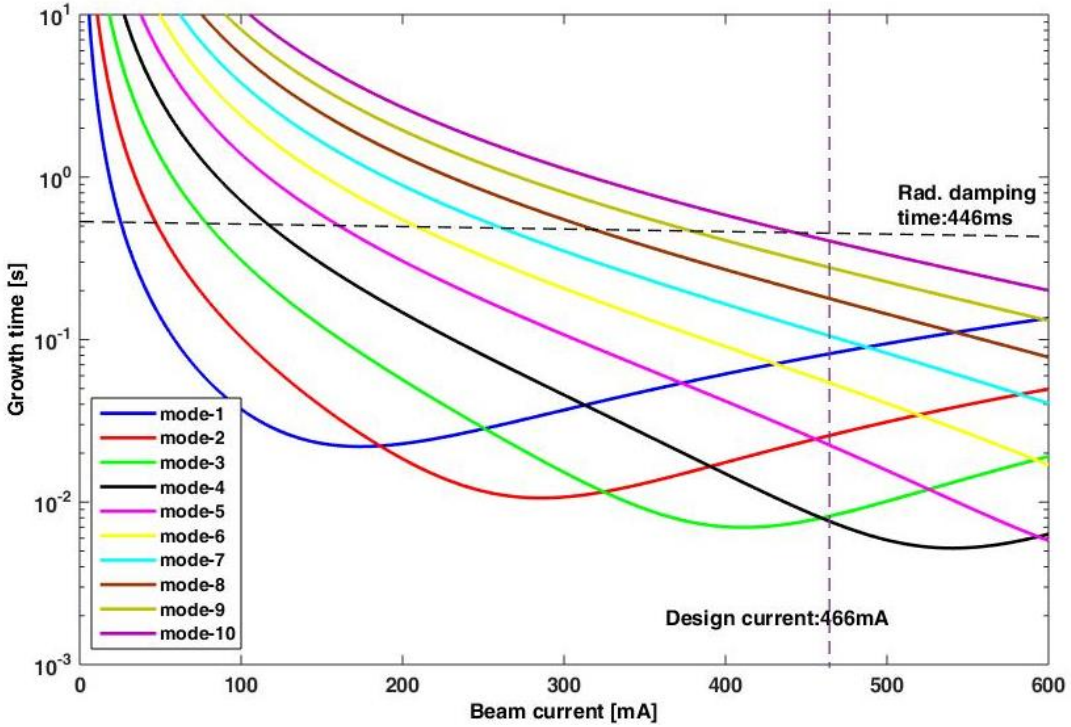

Growth time of CBI due to acceleration mode of CEPC Z operation (10 modes to be damped)

Fundamental Mode Instability of Z-pole

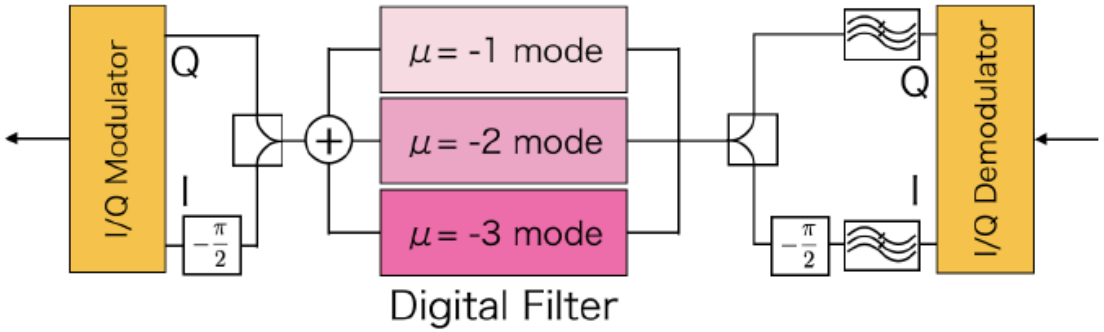

Damper system for SuperKEKB:

Use the mode by mode damper system with digital filters to suppress (SuperKEKB)

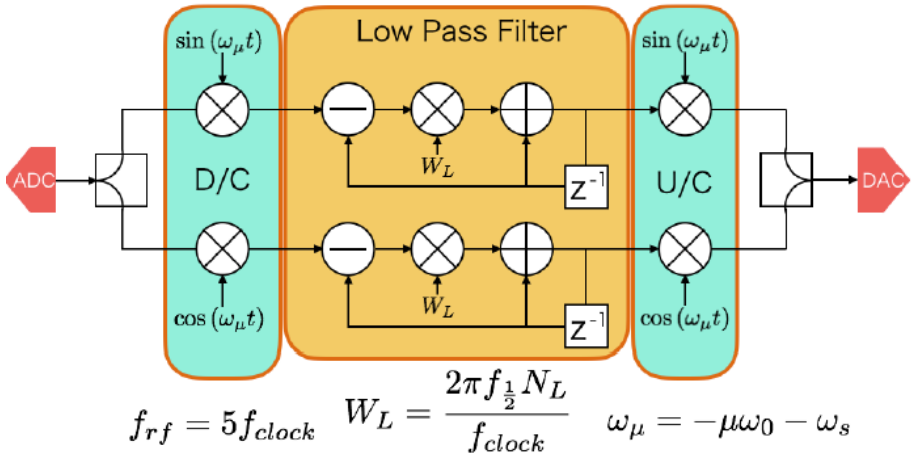

$f_{rf} = 5f_{clock}$ $W_L = \frac{2\pi f_{\frac{1}{2}} N_L}{f_{clock}}$ $\omega_\mu = -\mu\omega_0 - \omega_s$

Functional block diagram of digital filter for SuperKEKB

Kouki Hirosawa. Development of a coupled bunch instability damper caused by the acceleration mode for SuperKEKB. PASJ2016 TPU012

Main Ring HOM CBI and Feedback

Machine parameter: wangdou20170222	H	W	Z
Cavity number (total)	336	240	96
Beam feedback time [ms]	**3.3**	**3.3**	**3.3**
Average beta_x,y in RF cavity [m]	30	30	30
***Q*e limit**	**1×10^4**	**1×10^4**	**1×10^4**
H cavity 336, W&Z cavity 168, with feedback, Ib limit [mA]	**580.14**	**1547.05**	**673.07**
Lmax / IP [10^{34} $cm^{-2}s^{-1}$]	**60.19**	**81.59**	**17.23**
Unused cavity off-line for W&Z, with feedback, Ib limit [mA]	580.14	2165.87	2355.75
Lmax / IP [10^{34} $cm^{-2}s^{-1}$]	**60.19**	**114.23**	**60.29**
H, W, Z all 336 cavities, with feedback, Ib limit [mA]	580.14	386.76	168.27
Lmax / IP [10^{34} $cm^{-2}s^{-1}$]	60.19	20.40	4.31
H cavity 336, W&Z cavity 168, without feedback, Ib limit [mA]	**39.94**	**31.57**	**3.25**
Lmax / IP [10^{34} $cm^{-2}s^{-1}$]	**4.14**	**1.66**	**0.08**
Unused cavity off-line for W&Z, without feedback, Ib limit [mA]	39.94	44.19	11.38
Lmax / IP [10^{34} $cm^{-2}s^{-1}$]	4.14	2.33	0.29
SR power limit [MW]	**50**	**50**	**50**
Ib limit from SR power limit [mA]	**29.9**	**151.1**	**1470.6**
Lmax/IP limit from SR power limit [10^{34} $cm^{-2}s^{-1}$]	**3.1**	**8**	**37.6**

- HOM *Q*e limit ~ **1×10^4** (including frequency spread)
- Beam feedback time ~ **3.3 ms** (damping time: 5 turns and margin)
- Average beta_x,y in RF cavity ~ **30 m**

$$Lmax \propto I_0 \propto \frac{1}{\tau \cdot Q_e}$$

Cavity HOM Frequency Spread

- Cavity fabrication and tuning will make small HOM frequency spread, this will result in an “effective” quality factor Q.

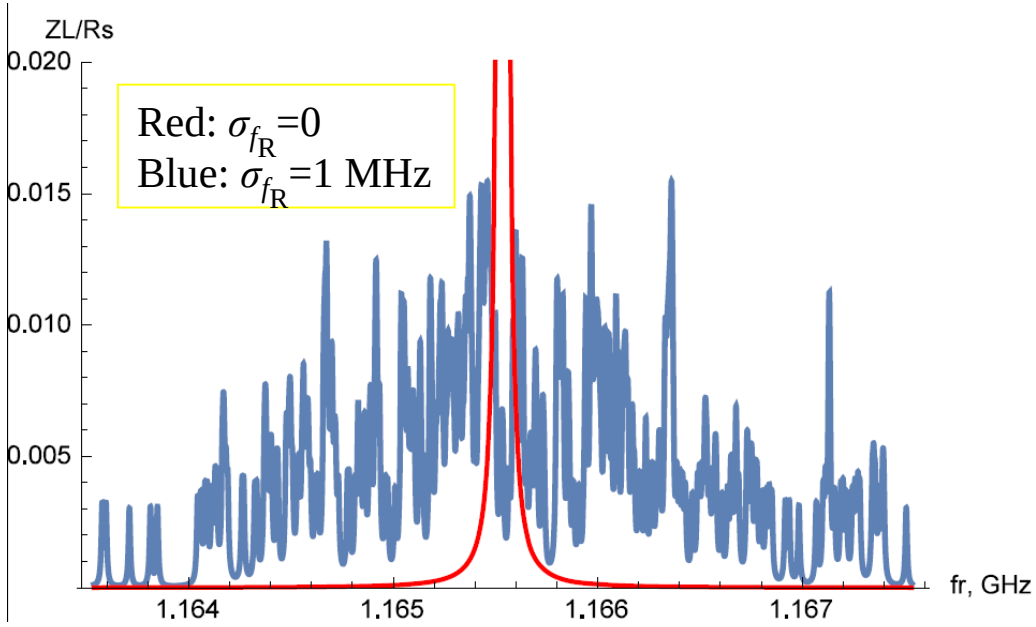

f_R = 1.16554 GHz, Q = 1.10×10^5, 336 RF cavities

Main Ring Cavity Impedance

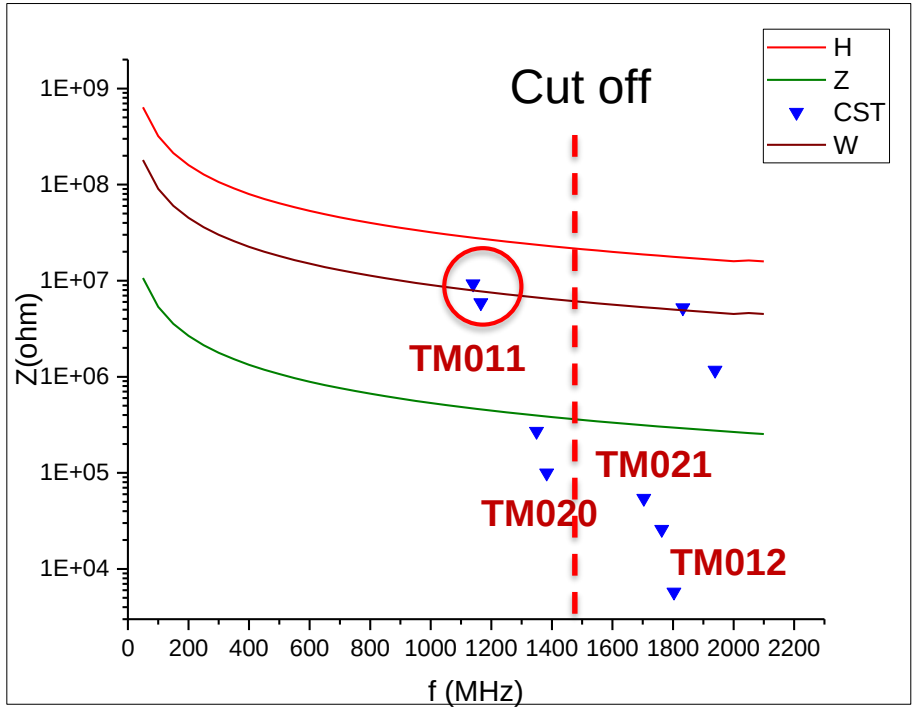

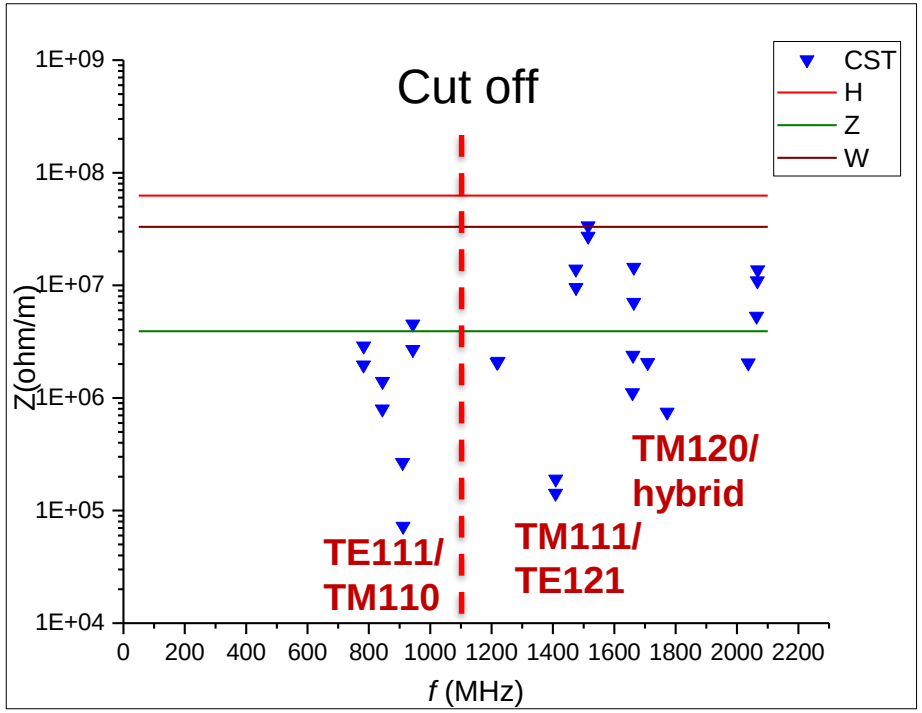

- H: 336 cavity, W & Z: 168 cavity
- Feedback: 3.3 ms, Transverse beta: 30 m
- Impedance of all the modes below the threshold if HOM frequency spread included
- Further optimize coupler RF design

CEPC Booster HOM CBI Instability and Feedback

Modes	*f* (GHz)	R/Q (Ω)	Q_{ext} measured	CBI Growth Time (ms)		
				H-extraction	W-extraction	Z-extraction
TM011	2.45	156	5.90E+04	3758	2157	363
TM012	3.845	44	2.40E+05	2087	1198	202
TE111	1.739	4283	3.40E+03	6159	4594	906
TM110	1.874	2293	5.00E+04	782	583	115
TM111	2.577	4336	5.00E+04	414	309	61
TE121	3.087	196	4.40E+04	10400	7757	1530
				H-injection	W-injection	Z-injection
TM011	2.45	156	5.90E+04	313	270	80
TM012	3.845	44	2.40E+05	174	150	44
TE111	1.739	4283	3.40E+03	513	574	199
TM110	1.874	2293	5.00E+04	65	73	25
TM111	2.577	4336	5.00E+04	34	39	13
TE121	3.087	196	4.40E+04	867	970	336

- All larger than beam feedback time limit ~ **3.3 ms** (5 turns and margin)
- Cavity HOM frequency spread will have more margin
- Average beta_x,y in RF cavity ~ **30 m**

Outline

- CEPC introduction
- RF system design and parameters
- RF transient and instability
- R&D plan and status

CEPC SRF R&D Plan (2017-2022)

- **Two small Test Cryomodules** (650 MHz 2 x 2-cell, 1.3 GHz 1 x 9-cell)
- **Two full scale Prototype Cryomodules** (650 MHz 6 x 2-cell, 1.3 GHz 8 x 9-cell)
- **Schedule**
  - 2017-2018 (key components, IHEP Campus)
    - high Q 650 MHz and 1.3 GHz cavities, N-doping + EP
    - 650 MHz variable couplers (300 kW)，1.3 GHz variable couplers (10 kW)
    - high power HOM coupler and damper, fast-cool-down and low magnetic module, reliable tuner
  - 2019-2020 (test modules integration, Huairou PAPS)
    - Horizontal test 16 MV/m, Q_0 > 2E10
    - beam test 1~10 mA
  - 2021-2022 (prototype modules assembly and test, Huairou PAPS)

RF and Mechanical Design of 650 MHz Cavity

Parameters	Value
R/Q (Ω)	213
G (Ω)	284
*E*p/*E*acc	2.4
*B*p/*E*acc [mT/(MV/m)]	4.2

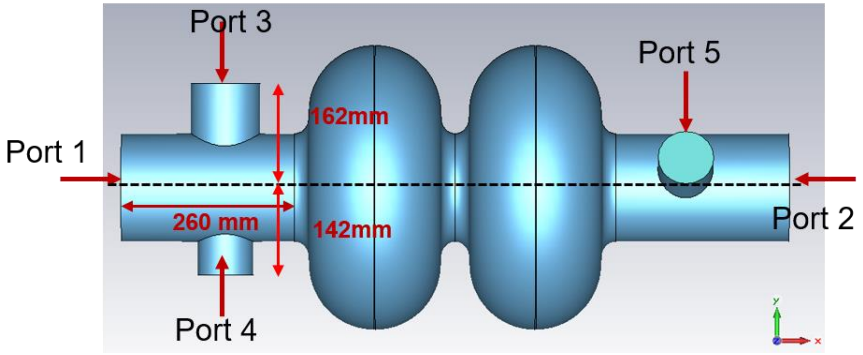

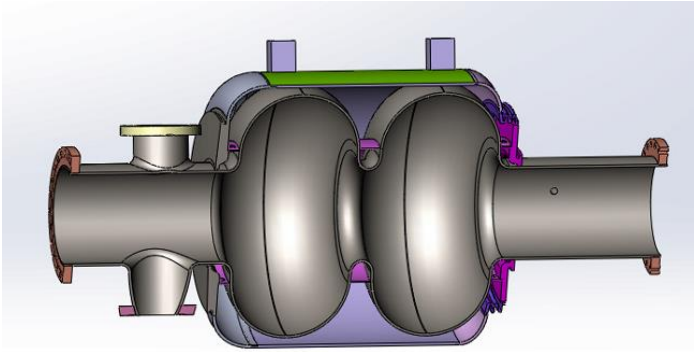

	P (W) (*U* = 1 J)	*Q*e
Port 1	0.001867	2.19E12
Port 2	0.001352	3.02E12
Port 3	0.005441	7.51E11
Port 4	0.003435	1.19E12
Port 5	0.003320	1.23E12

*Q*e (all ports)：2.65E+11. If *Q*0 = 4E10 , then *Q*0 (measured) decrease to 3.48E10.

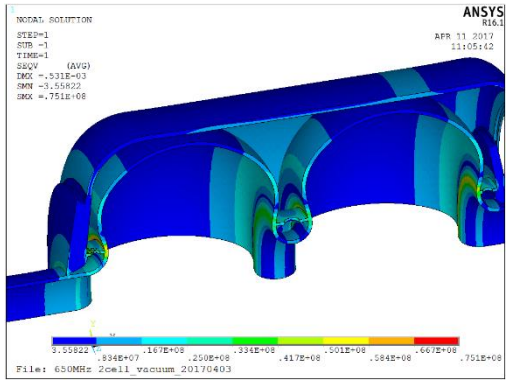

df/dp and stress

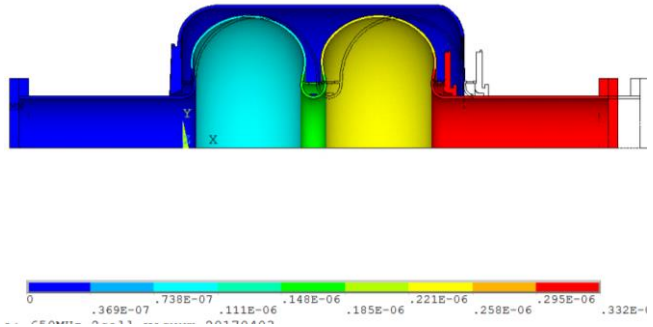

LFD

Cavity Tuner

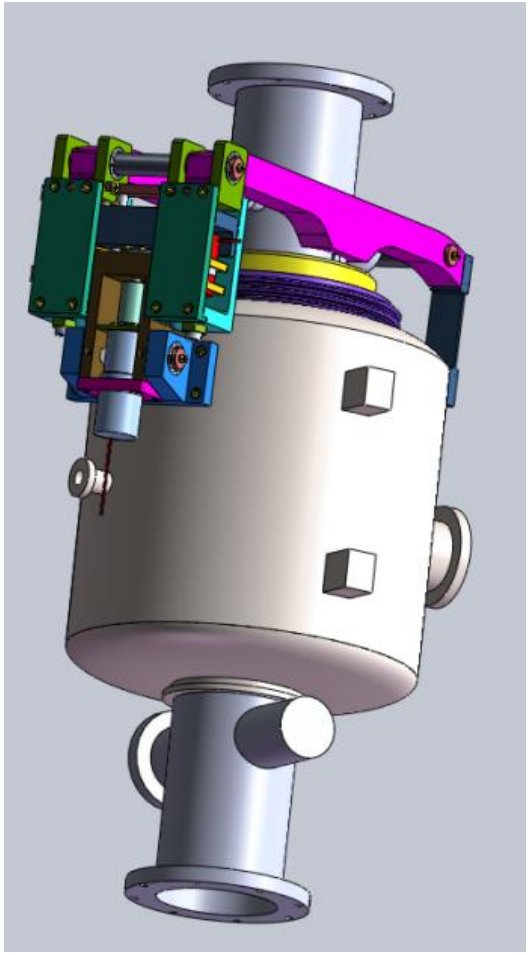

- installed at the end of cavity
- high mechanical strength
- piezo always compressed
- high reliability

Tuner Requirements

Parameter	Tuner for 1.3 GHz cavity	Tuner for 650 MHz cavity
Coarse tuner frequency range	> 250 kHz	> 530 kHz
Coarse tuner frequency resolution	< 20 Hz	< 20 Hz
Fine tuner frequency range	1 kHz	1 kHz
Fine tuner frequency resolution	1 Hz	1 Hz

650 MHz Single Cell Cavity Test before N-doping

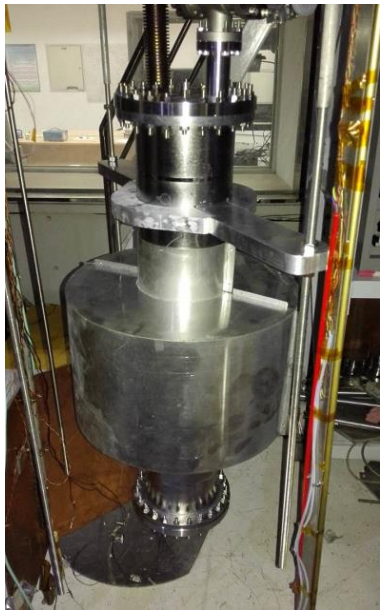

- Old RF design, B_p / E_{acc} = 4.75 mT/(MV/m)
- Shielded dewar, remnant magnetic field 20 mG. Additional magnetic shield around cavity.
- Fine grain, BCP + 120 C bake 48 h
- Next step: cavity N-infusion; N-doping + EP

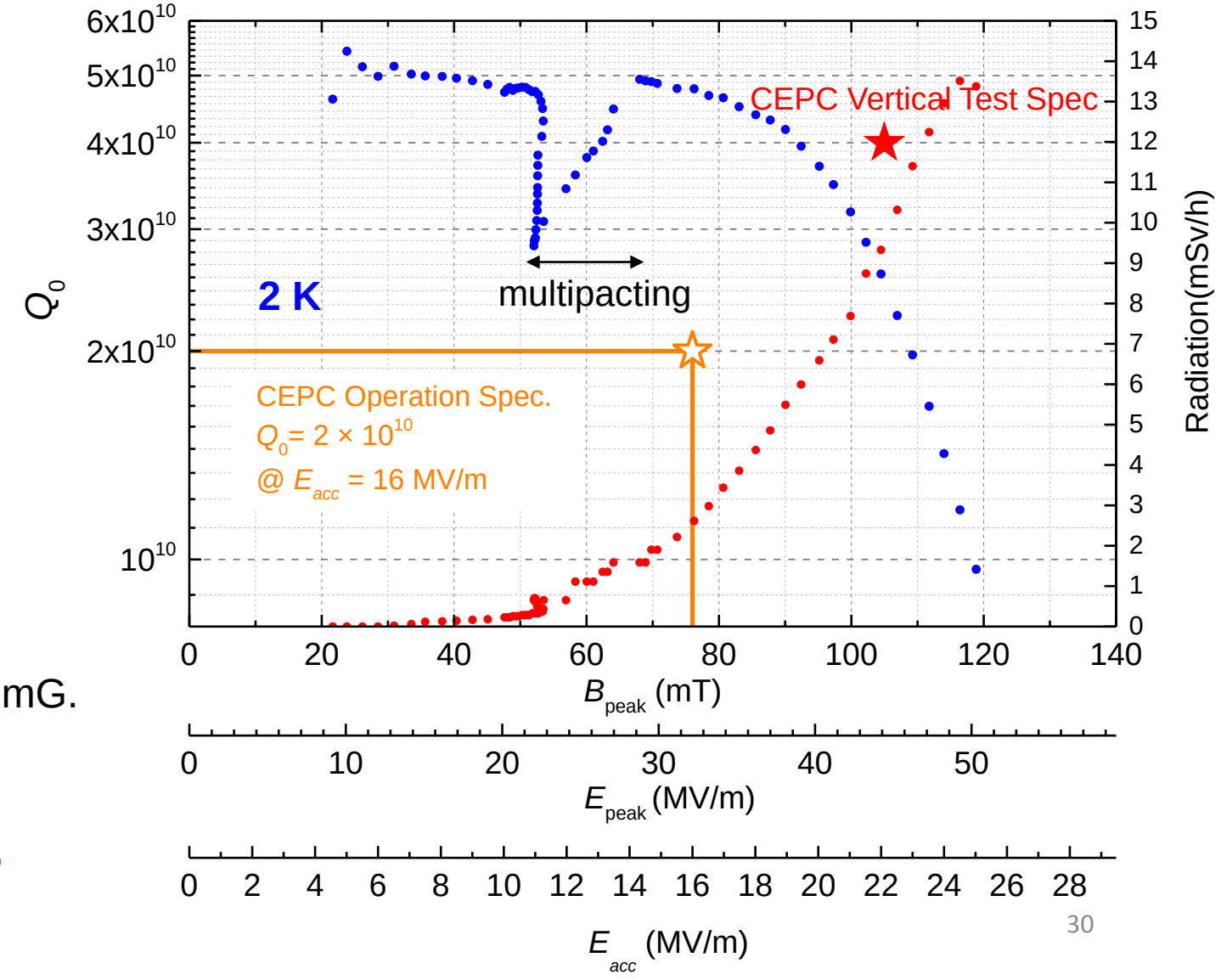

N-doping of Nb Samples

N-doping at OTIC Ningxia in furnace with cryogenic pump

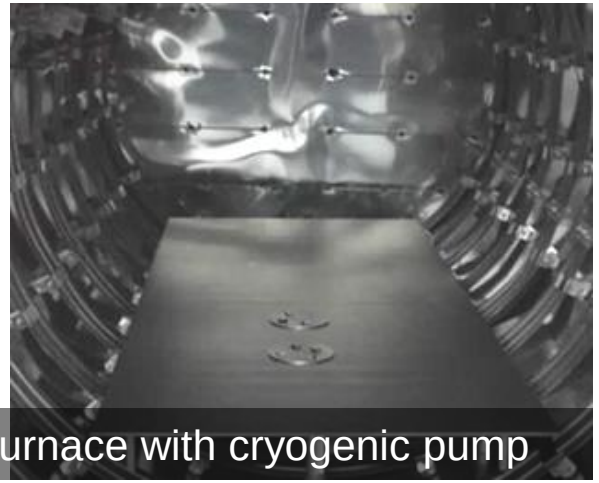

SIMS at Tsinghua University

- **Successful N-doping in Nb samples.**
- **EP necessary for treatment after doping.**

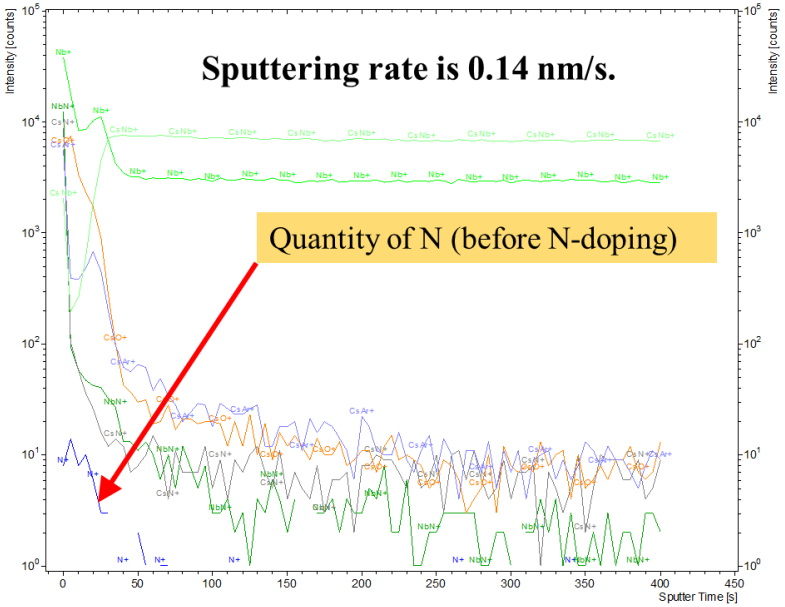

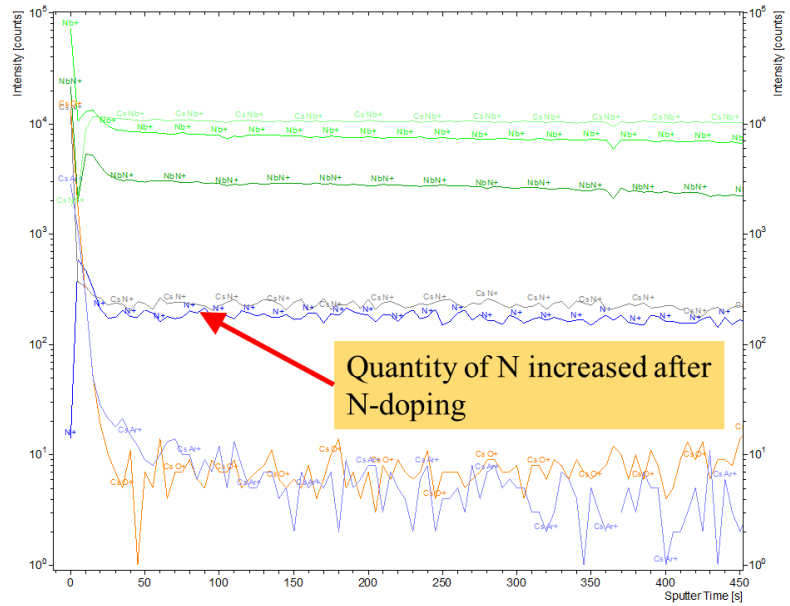

CEPC Input Coupler Challenges

- High power handling capability: CW, 300 kW (> 400 kW, update).
- Wide-range variable coupler with low heat load to save power.
- Clean assembled with cavity in class 10 clean room
- Balance coupler vacuum part length (cryomodule diameter size) and heat load.

Requirements	Main ring	Booster
Frequency (GHz)	0.65	1.3
Power (kW)	300	10
Coupling (Qext)	Variable: 1E5~2E6	Variable: 4E6~4E7
2 K heat load (dynamic 300 kW, TW, CW)	1 W	0.3 W

CEPC Variable 650 MHz Input Coupler Design

- RF design complete, thermal and mechanical design ongoing.
- Thermal anchor or helium gas cooling of outer conductor. Water or gas cool of inner conductor.
- Start fabrication in Aug 2017.

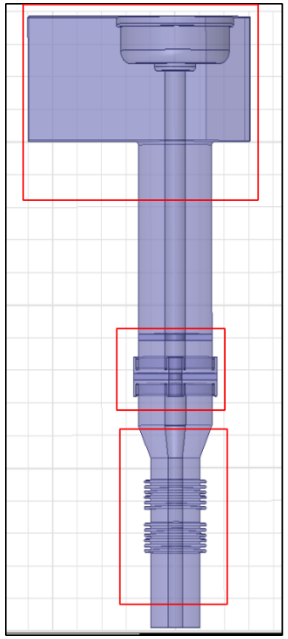

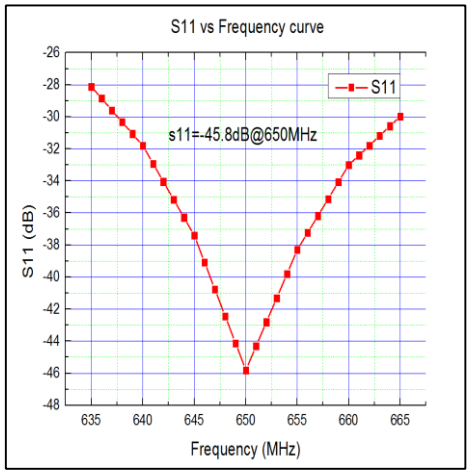

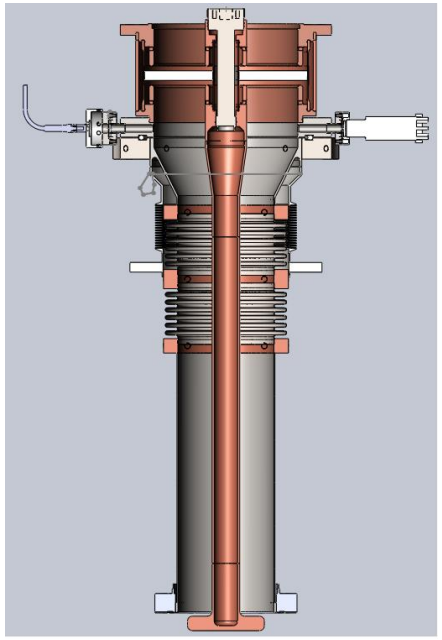

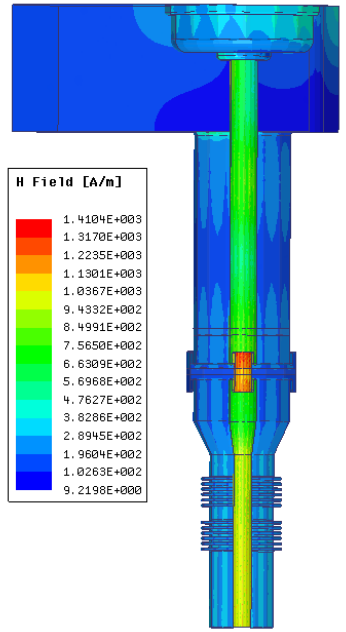

Component	Power loss at 300 kW, CW, TW (W)
Ceramic	113
Inner window	70.4
Outer window	15.8
Inner coaxial of vacuum part	103.4
Outer coaxial of vacuum part (Bellow)	50 (29.2)
Inner coaxial of air part	102.6
Outer coaxial of air part	23.1
Doorknob	77.0
Total	555

Input Coupler Heat Load

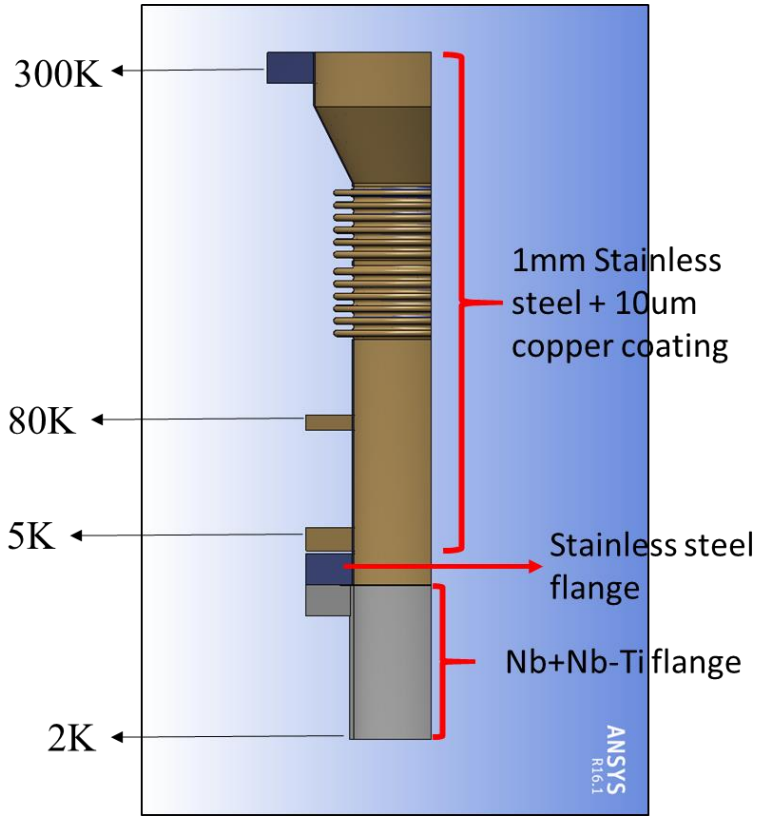

The heat load calculation model

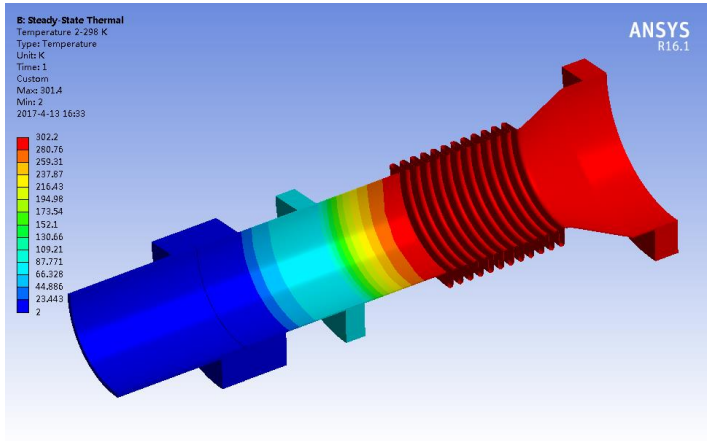

Component	Power dissipation
Stainless steel of gap	2.28 W
Al-Mg alloy sealing gasket	0.02 W
SS outer conductor of FPC	48.4 W

	No gap	With gap
2 K heat load	-0.99 W	-2.74 W
5 K heat load	-8.17 W	-8.94 W
80 K heat load	-30.68 W	-30.32 W
300 K heat load	-8.09 W	-0.16W

- Water cooling of the outer bellow is a must.
- RF shielding of the gap between the coupler and cavity connecting flange is very important, since which made great contributions to the 2K heat load.
- Try helium gas cooling for next step

Coupling Adjusting Mechanism

- Two Bellows on outer conductor.
- Method other than changing the penetration depth of the antenna tip : RF short plunger on the doorknob waveguide (Bob Rimmer) (standing wave, frequency change, adjusting range …)

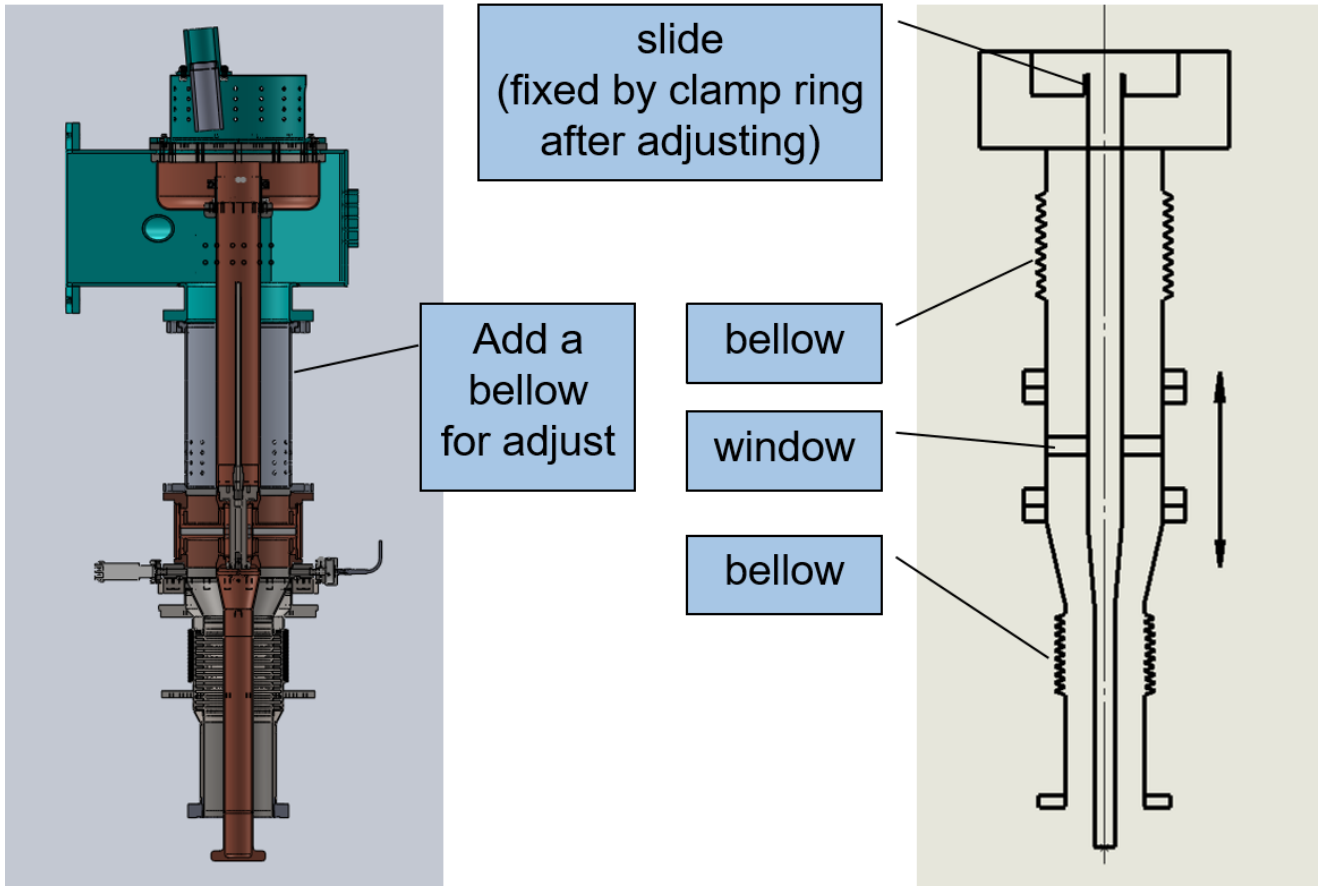

650 MHz Input Coupler (fixed)

- RF, mechanical and thermal design.
- ADS 650 MHz input coupler tested up to **130 kW CW** (limited by the power source).

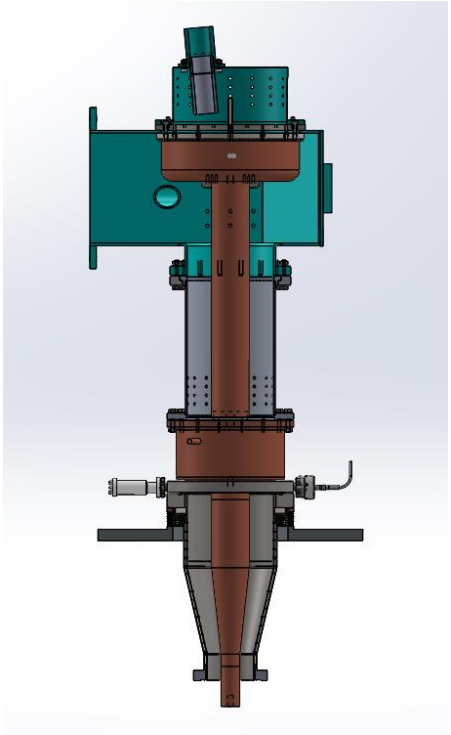

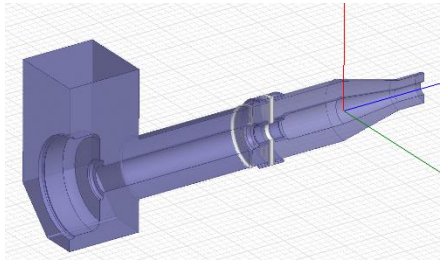

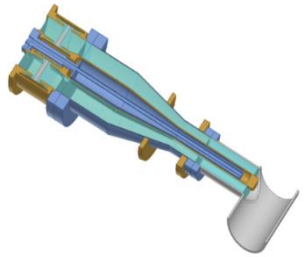

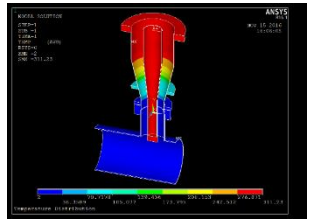

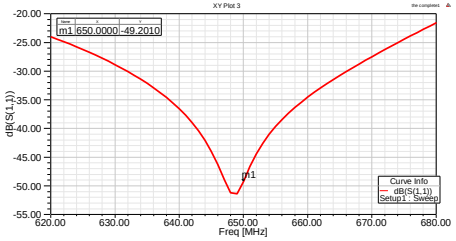

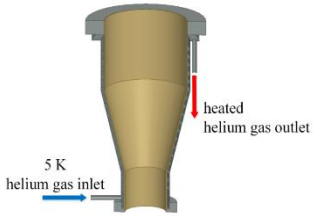

Outer conductor @ 300 kW	2 K	5 K	80 K	RT flange	Total
Dynamic heat load (W)	1.2	6.1	18.8	6.5	32.8
Static heat load (W)	0.07	1.5	4.8	- 6.4	0

Cold test

Clean and assembly

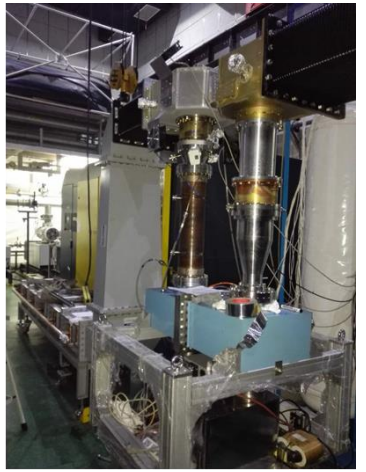

High power test

CEPC 1.3 GHz Variable Coupler

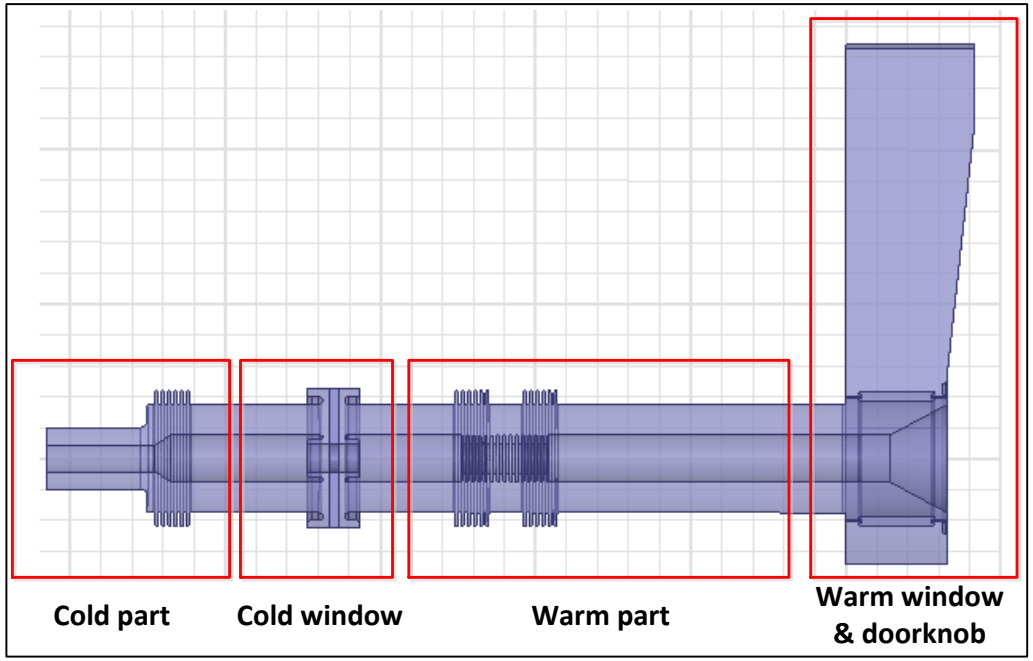

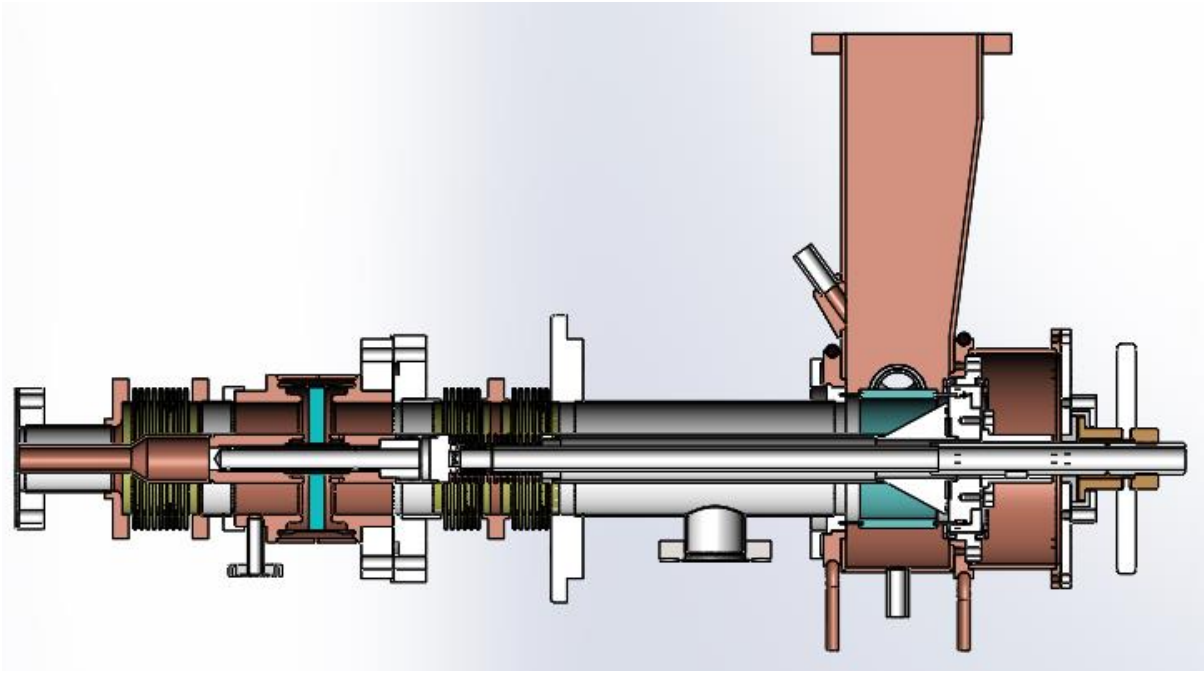

In fabrication

HOM Damping Scheme and Requirement

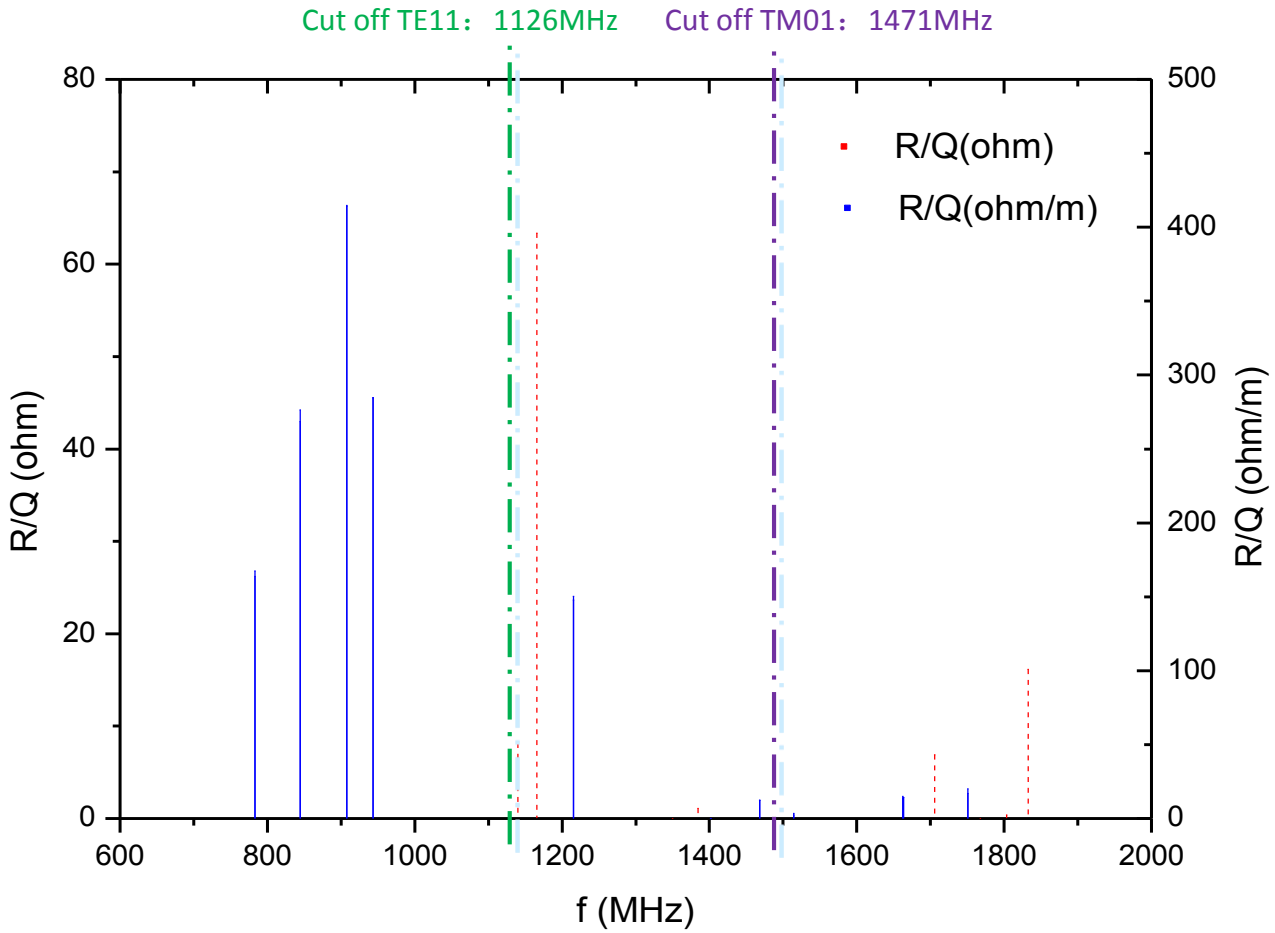

- Dangerous monopole: aroud 1200 MHz
- Dangerous dipole: 800 ~ 900 MHz, 1200 MHz

Damping scheme:

- HOM coupler: 800~1400 MHz
- HOM absorber > 1400 MHz
- Medium-freq modes propagation through cavities with frequency spread to be studied

Beam stability:

- HOM ***Qe* ~ 10^4**

HOM power:

- Maximum extract power of coupler: **1 kW**
- If beam spectrum coincides with HOM, the requirement for *Q*e should less than 10^3. For TM011, if resonance happen, *P* = 300 W.

HOM Coupler Design

RF design

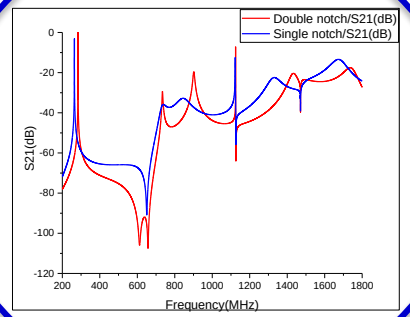

Mechanical designs

Next step

Design approach for HOM coupler

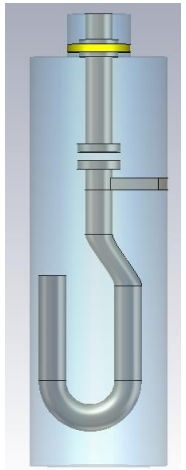

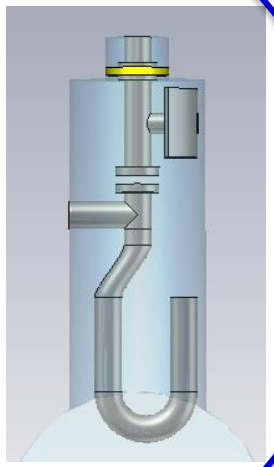

Single notch coupler

double notch coupler

Heat loss

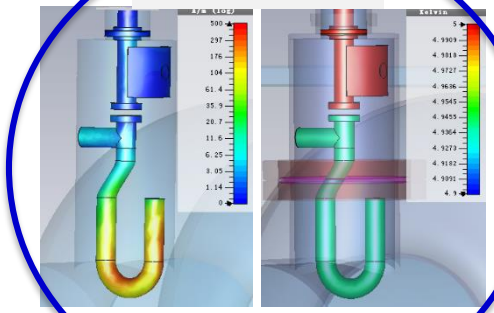

Multipacting analysis

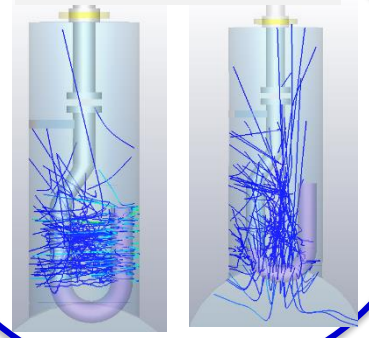

RF Design of HOM Coupler

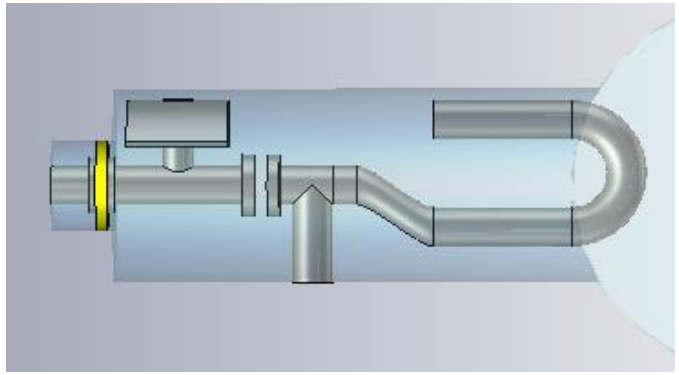

- Based on the successful LHC HOM coupler.
- Double notch for wideband.
- Transmission behavior optimized according to the HOM spectrum of the cavity by adjusting all design parameters.

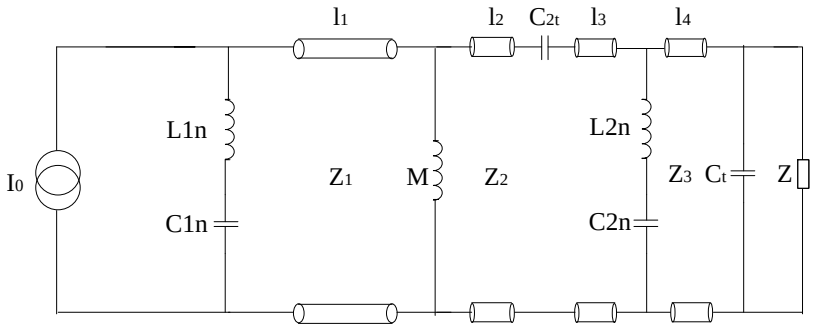

Transmission line equivalent circuit
(determined with HOM spectra)

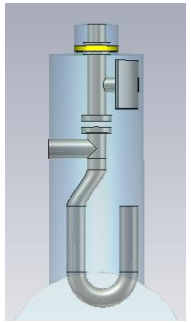

3D model
(using transmission line theory)

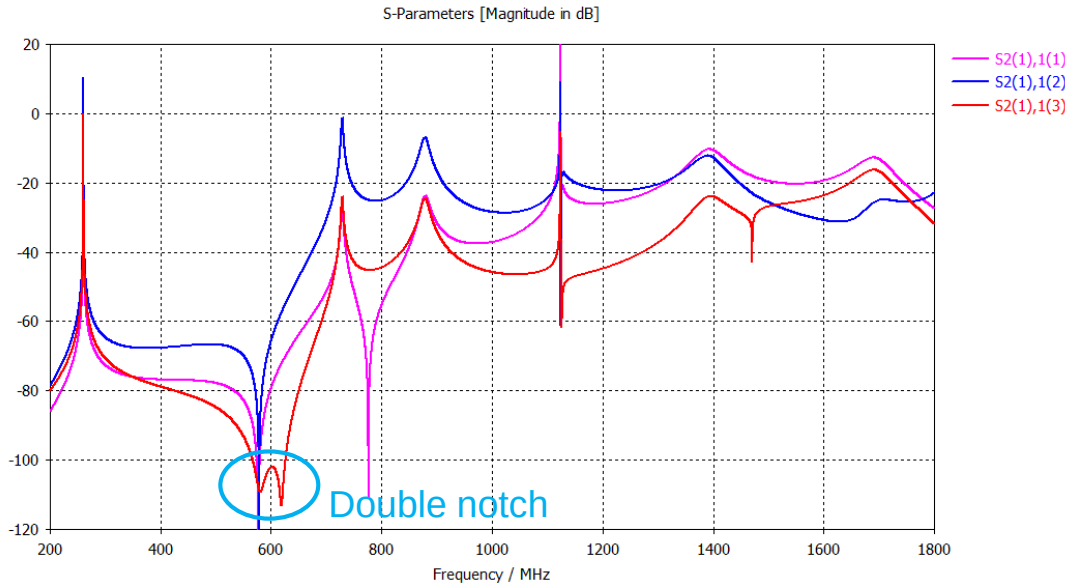

TM011 Mode at 1.126 GHz

- Due to mode transition
- Need to optimize the antenna structure for this mode

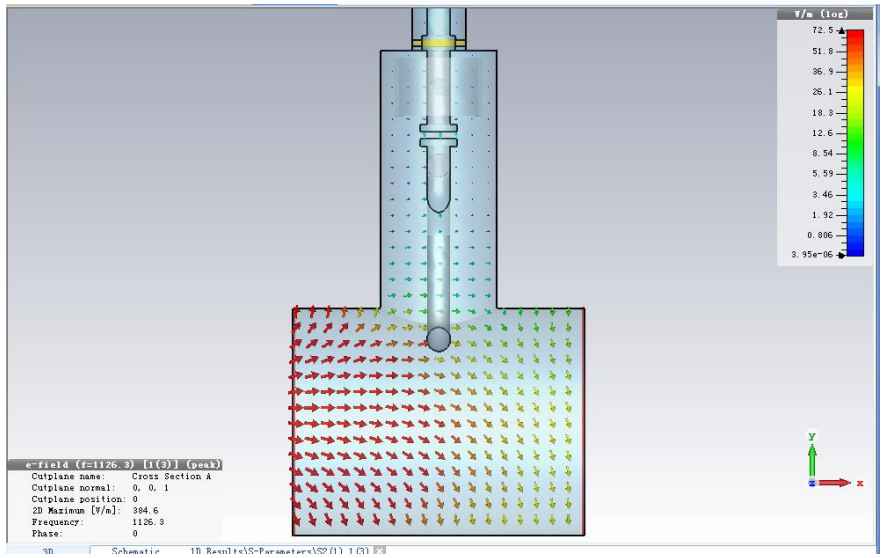

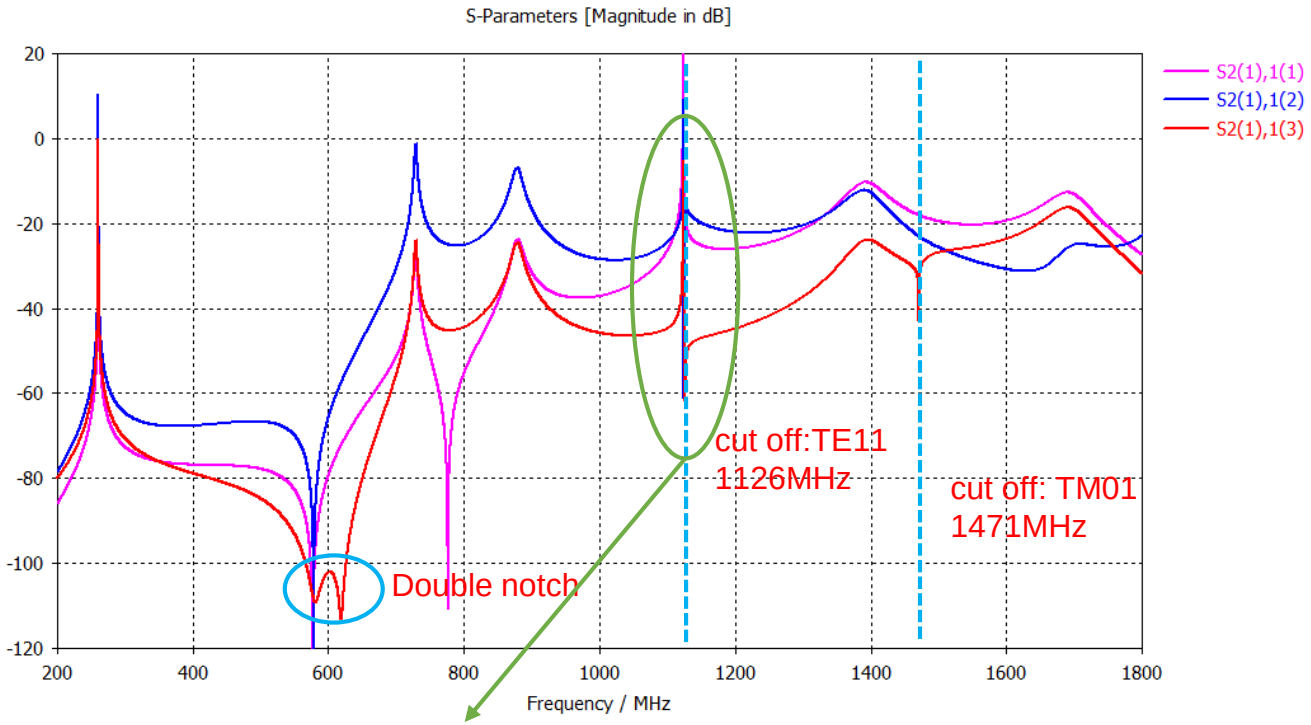

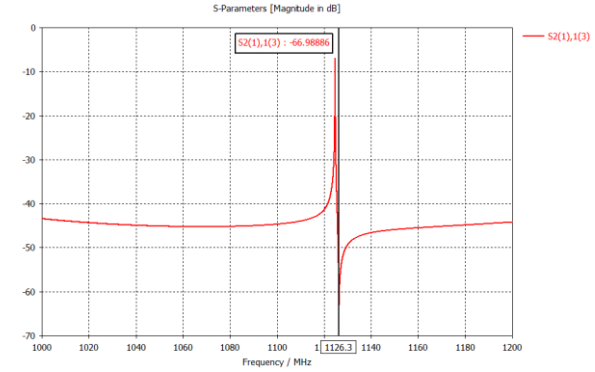

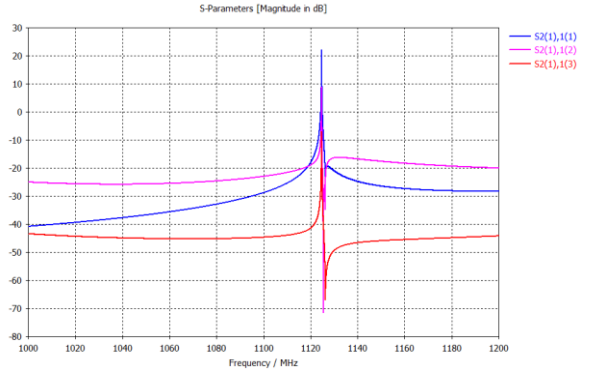

Tolerance Analysis

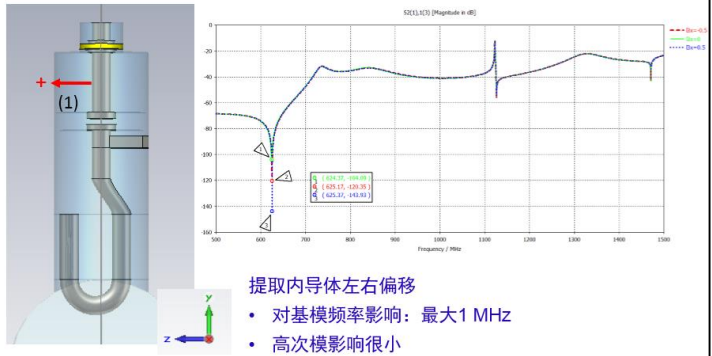

提取内导体左右偏移

- 对基模频率影响：最大1 MHz
- 高次模影响很小

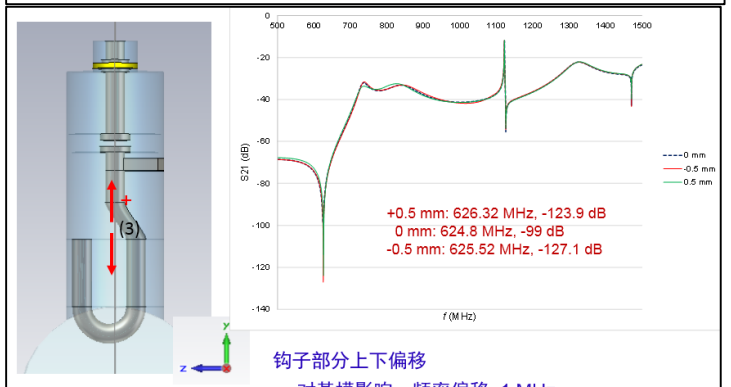

钩子部分上下偏移

- 对基模影响：频率偏移~1 MHz
- 对高次模影响较小

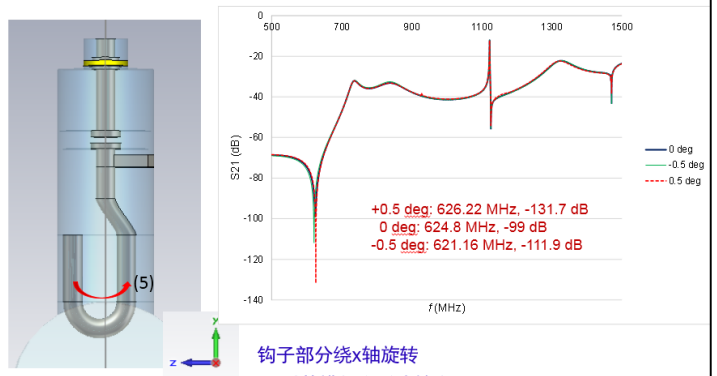

钩子部分绕x轴旋转

- 对基模频率影响较大: 2~3 MHz
- 对高次模影响很小

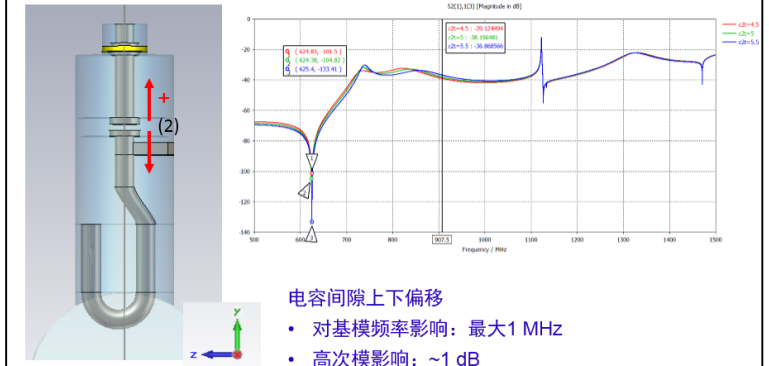

电容间隙上下偏移

- 对基模频率影响：最大1 MHz
- 高次模影响：~1 dB

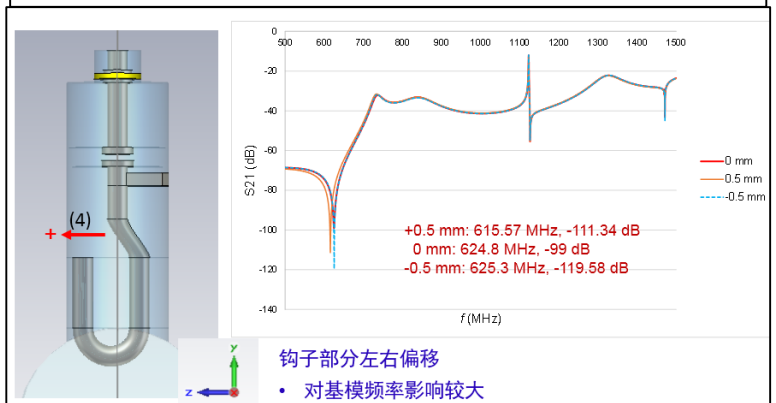

钩子部分左右偏移

- 对基模频率影响较大
- 对高次模影响很小

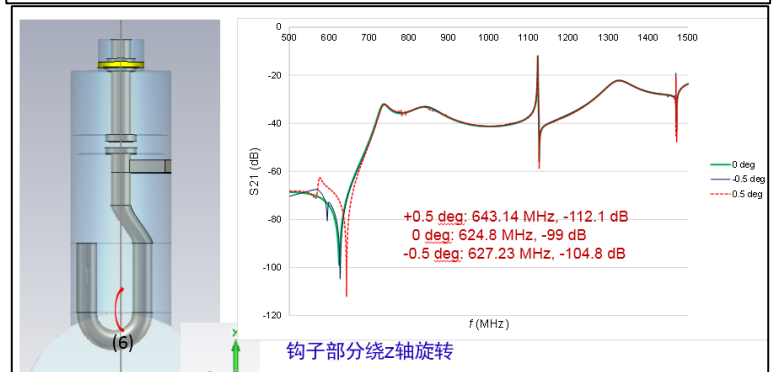

钩子部分绕z轴旋转

- 对基模频率影响较大: 20 MHz
- 对高次模影响很小

RF Power Dissipation

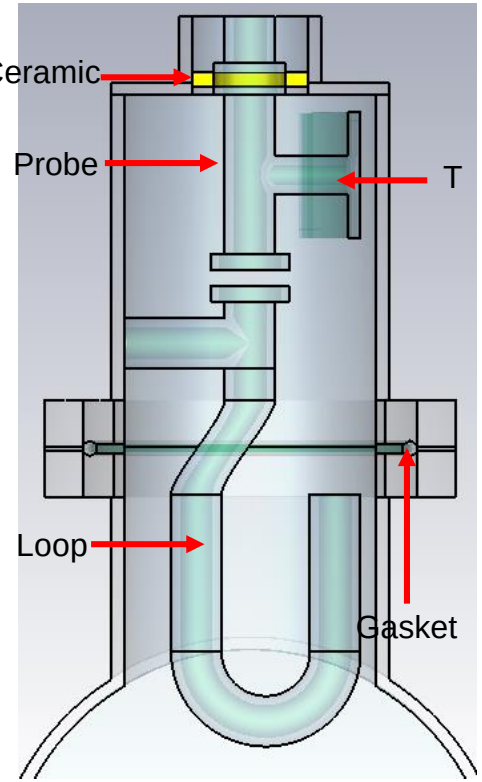

$$P_c = \frac{1}{2}\iint R_{surf} \cdot \left(\vec{H}(\vec{s}) \times \hat{n}\right)^2 ds$$

$$P_D = \pi f tan(\delta) \varepsilon 0 \varepsilon r \iiint \left|\vec{E}\right|^2 dV$$

$$R_{BCS} \propto \frac{1}{T} f^2 \exp\left(-\frac{17.67}{T}\right) \left(T < \frac{Tc}{2}\right)$$

Copper~anomalous skin effect

Coupler parts	Power dissipation from fundamental mode [mW]	Power dissipation from 1kW HOM [1] [mW]	Total [mW]	Notes
Loop	0.243	1.46e-4	0.243	Rs=22.8nΩ[2] for fundamental mode (20 MV/m) Rs=97.5 nΩ for HOM
T	1.07	0.281	1.351	Rs=1.18 mΩ for fundamental mode (20 MV/m) Rs=2.097 mΩ for HOM
Probe	0.585	0.348	0.933	Rs=1.18 mΩ for fundamental mode (20 MV/m) Rs=2.097 mΩ for HOM
Gasket (Al)	5.18e-3	7.28e-5	5.25e-3	Rs=0.3 mΩ for fundamental mode (20 MV/m) Rs=0.48 mΩ for HOM
ceramic	0.724	0.463	1.187	Al2O3

1) 1700 MHz
2) To be adjusted according to the resulting temperature.

Thermal Design of the HOM Coupler

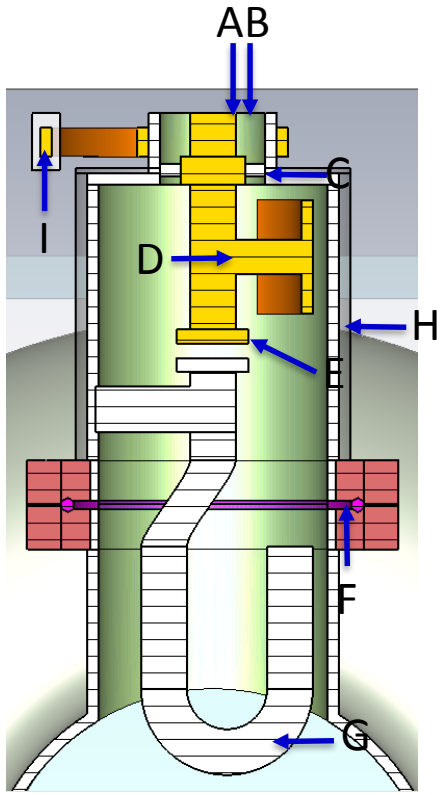

Boundary conditions:

A	Heat: 1 W
B	Heat: 1 W
C	Heat: 1.187E-3 W
D	Heat: 1.351E-3 W
E	Heat: 0.933E-3 W
F	Heat: 5.25E-6 W
G	Heat: 0.243E-3 W
H	Temperature: 2.5K
I	Temperature: 5K

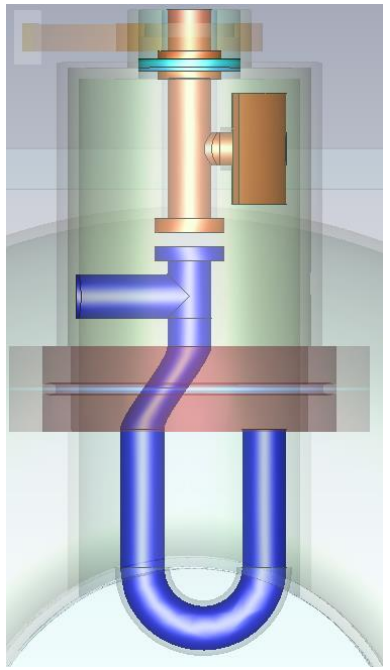

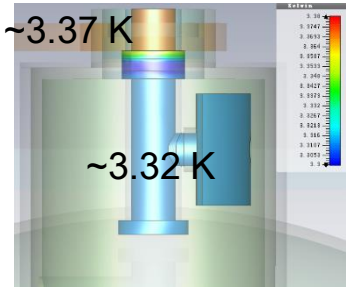

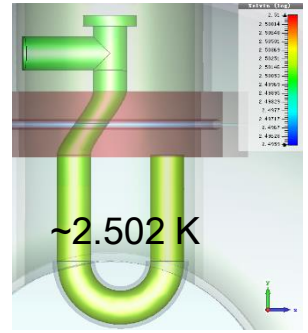

- Power dissipation caused by the fundamental mode and 1 kW HOM is in the mW range.
- A helium tank outside the HOM coupler is needed.
- No active cooling by liquid helium inside the loop.

HOM Absorber

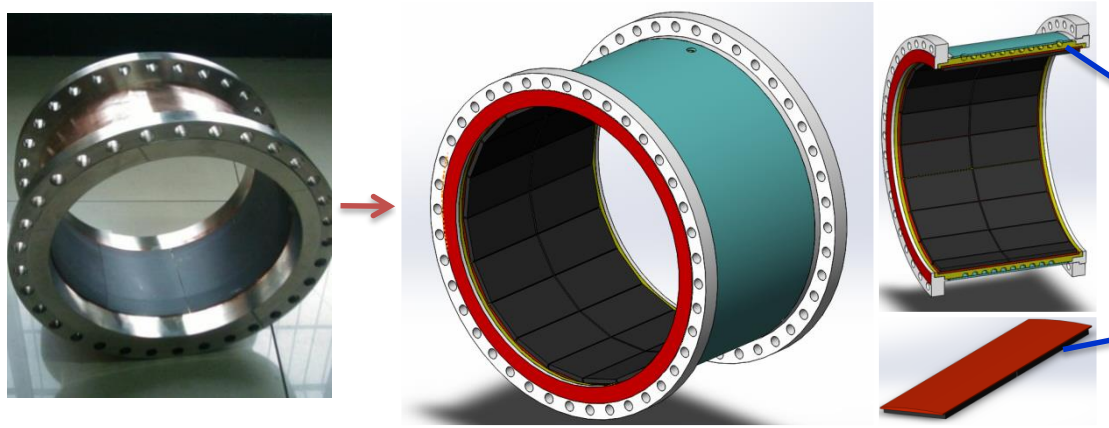

Water cooling pipe

Brazing the absorbing brick with copper plate

From arc shape to brick shape

The shape of absorbing material is optimized to lower the fabrication cost, and still guarantee enough absorbing efficiency.

- Build the test system to measure ε & μ of absorbing material.
- Test the mature ferrite material, and select new absorbing composite with wide frequency range.

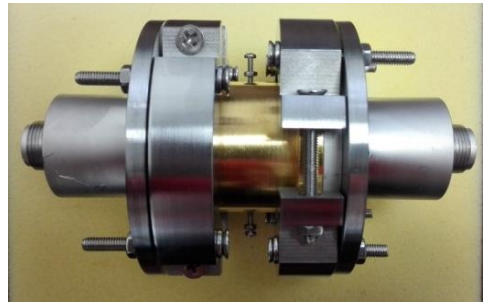

Test fixture

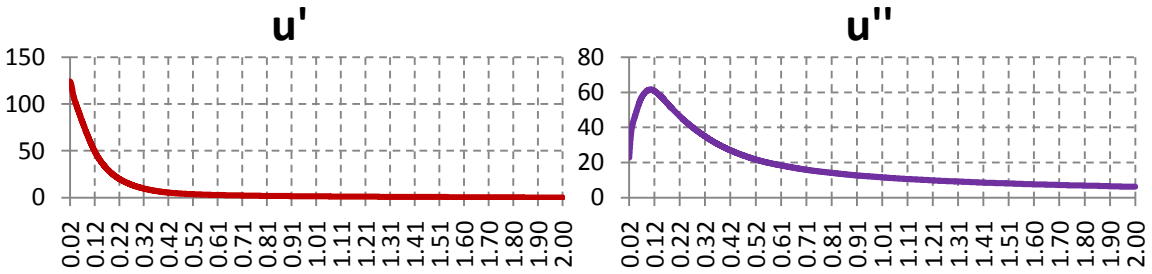

Test results

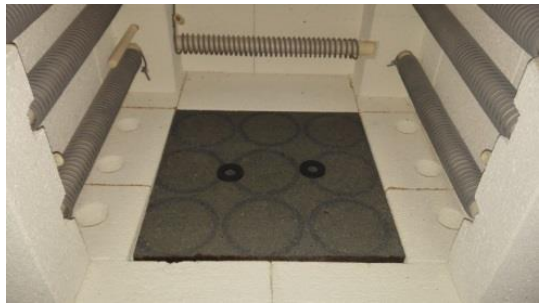

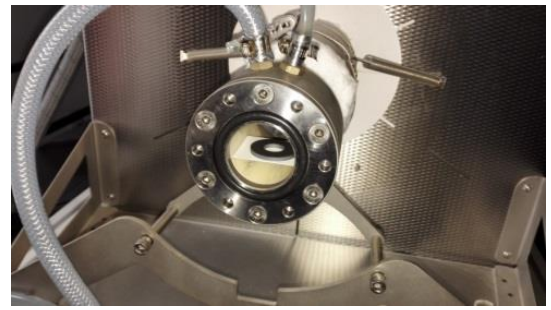

Brazing experiment

HOM Absorber

- Optimize the HOM absorber + taper as a matched load to improve microwave absorbing.

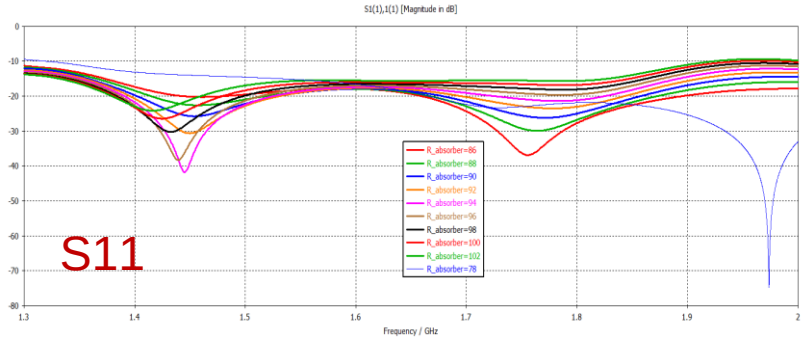

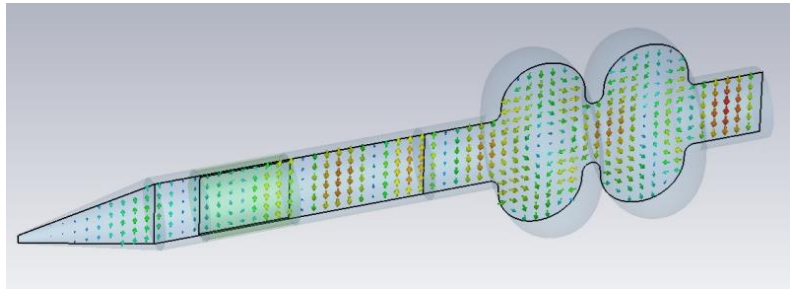

TM111 mode E field, f=1.456GHz, Q_L=56.7

- Simulation of “ cavity + absorber + taper ” model.
- Q_L in Eigen mode for special HOM mode
- Impedance in wakefield method for broadband.

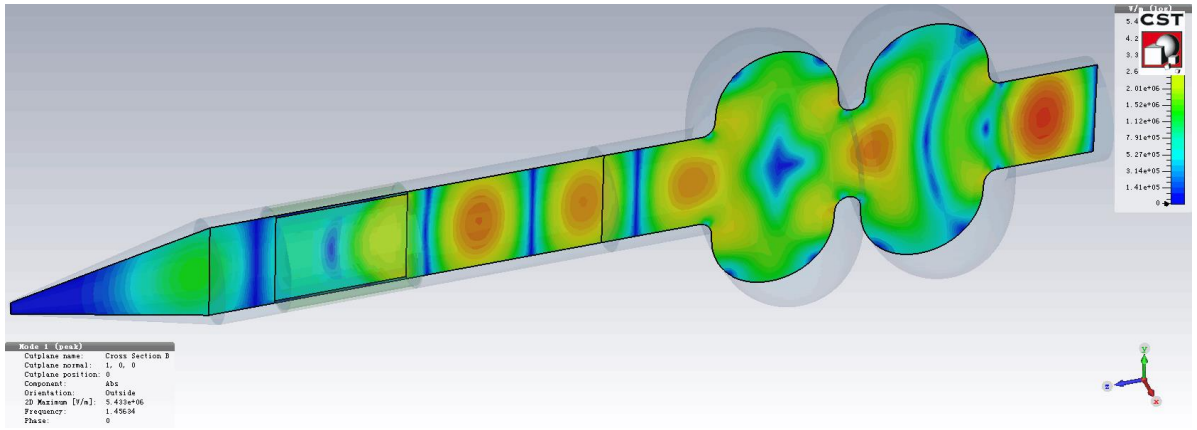

5-cell Cavity with Waveguide HOM Coupler

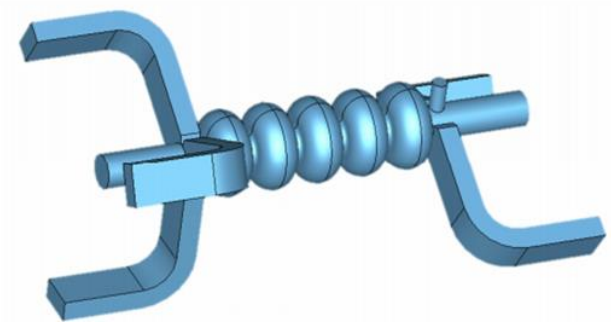

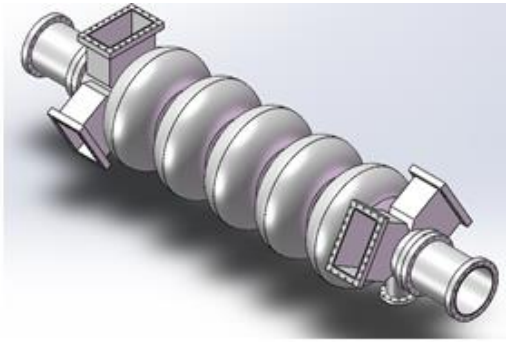

Nb prototype cavity in fabrication

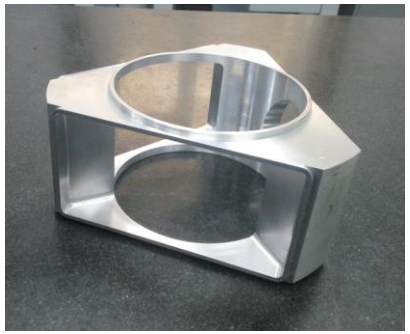

Aluminum test piece

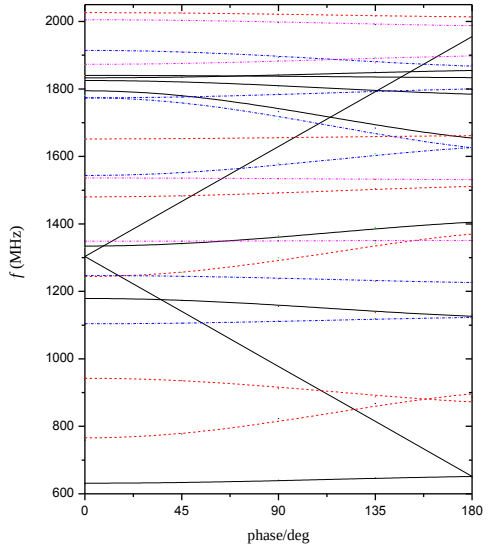

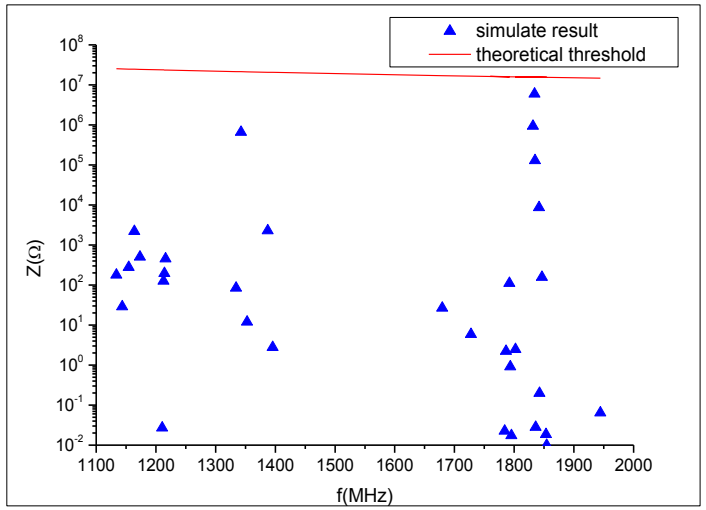

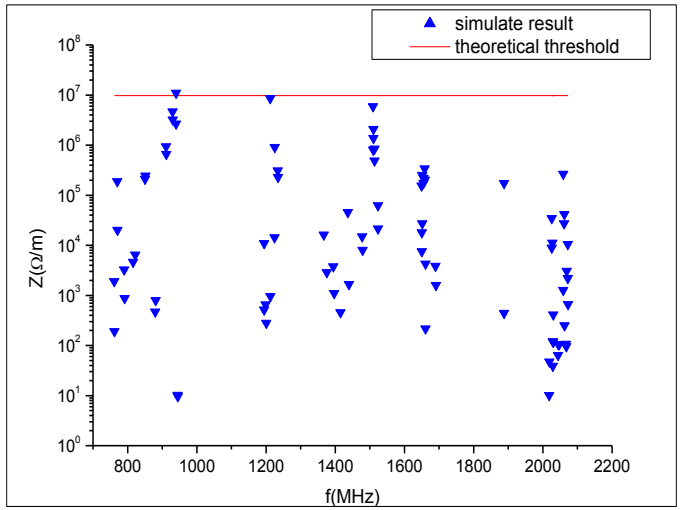

Dispersion curve, monopole impedance, dipole impedance

CEPC MR 650 MHz Cryomodule

- Operating at 2 Kelvin of superfluid helium.
- Six 2-cell 650 MHz superconducting cavities, six high power couplers, six mechanical tuner and two RT HOM absorbers, et al.
- Fast cool-down capability. Static heat load budget of whole cryomodule is 5 W at 2 K.

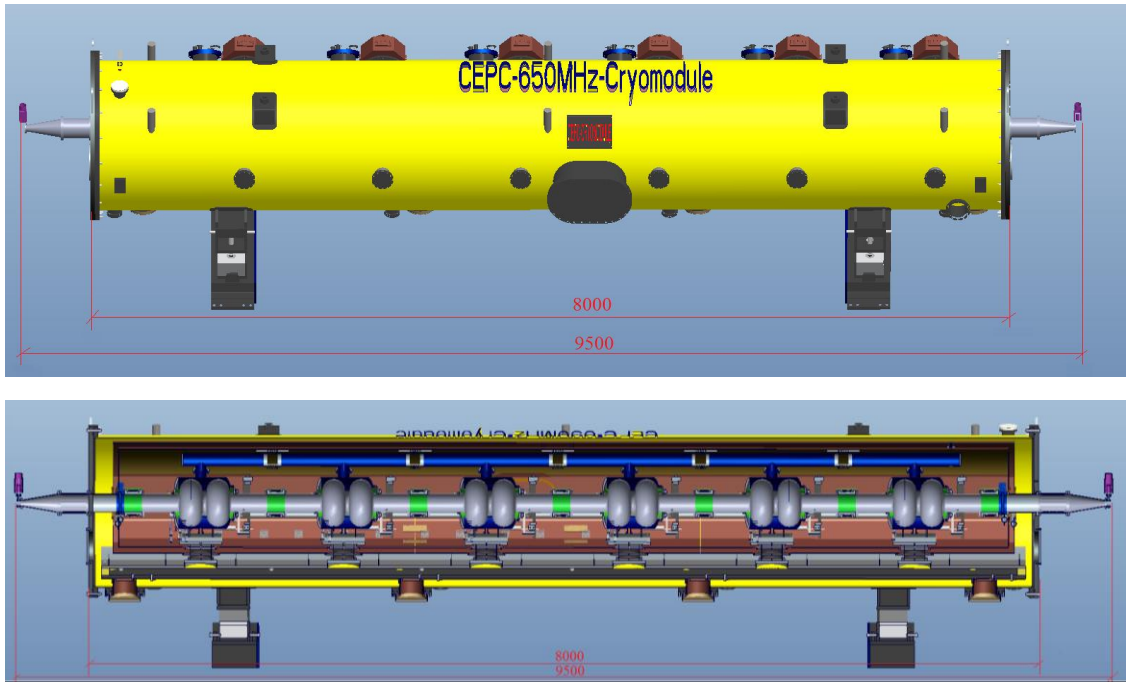

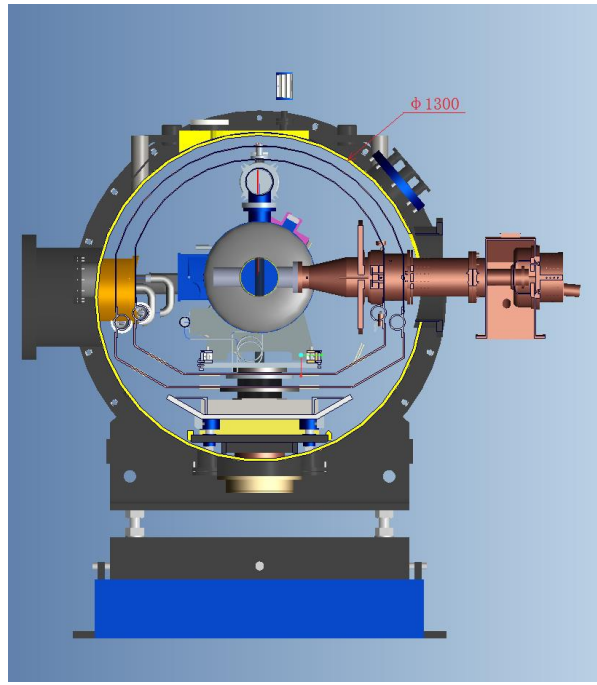

CEPC MR 650 MHz Cryomodule

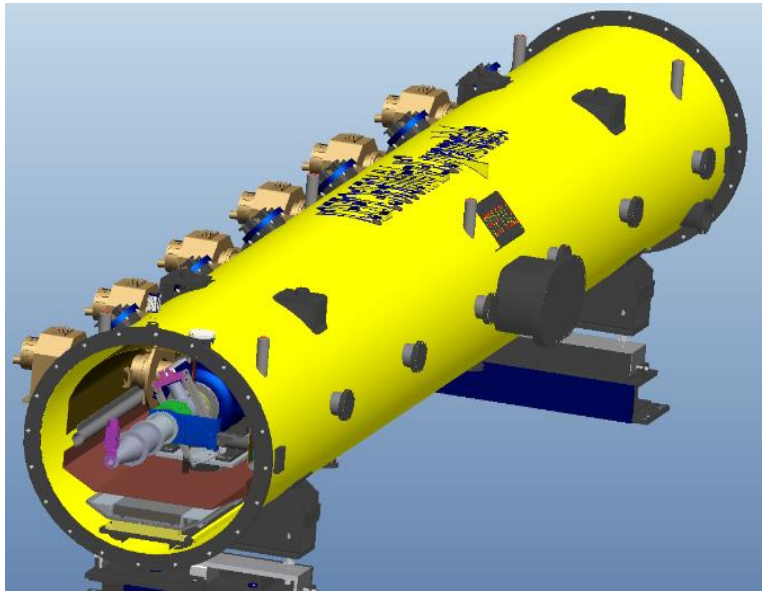

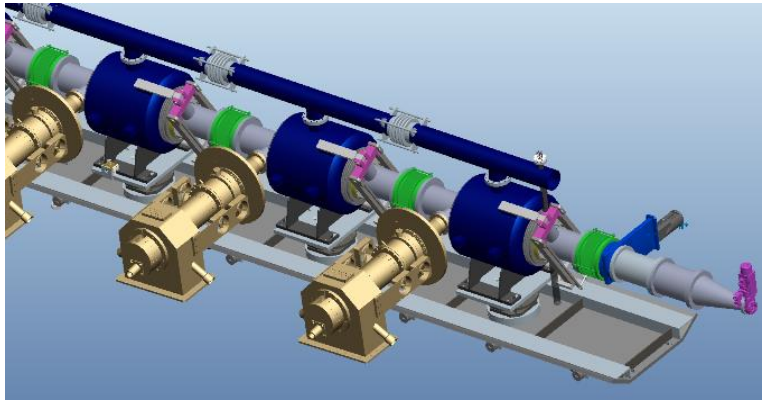

Overall length (flange to flange, m)	9.5
Inner diameter of vacuum vessel (m)	1.3
Beamline height from floor (m)	1.5
Overall weight (t)	16
Cryo-system working pressure (mbar)	31
Cryo-system working temperature (K)	2
Cryo-system pressure stability at 2 K (mbar)	0.1
Diameter of 2-phase pipe, mm	114
2 K heat exchange	1
Number of JT valve	1
Number of cavities	6
Number of coupler	6
HOM absorber	2
Number of 200-POST	6

IHEP New SRF Facility

Platform of **A**dvanced **P**hoton **S**ource Technology R&D, Huairou Science Park, Huairou, Beijing

Construction: 2017 - 2019
Ground Breaking: May 31, 2017

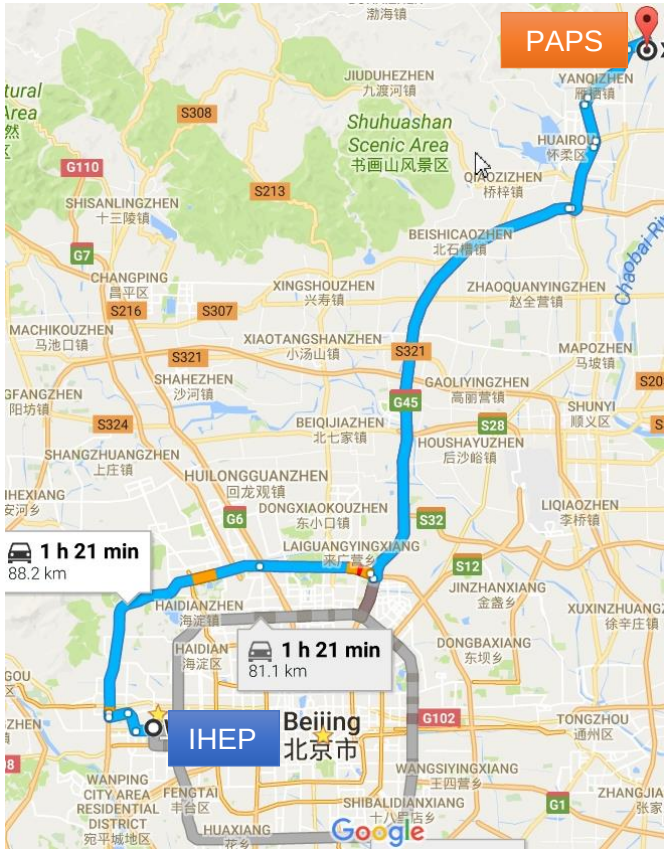

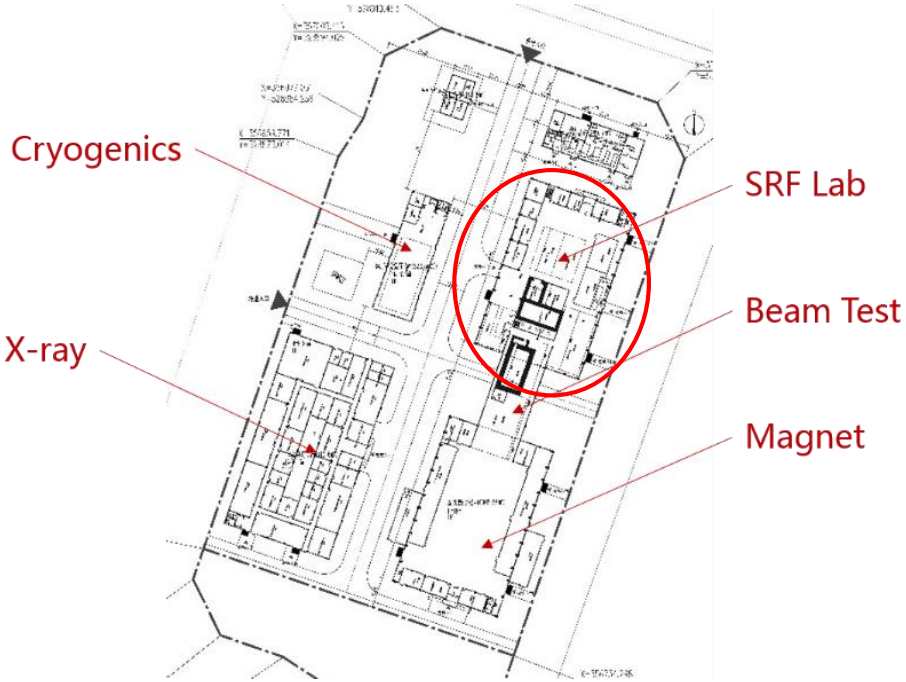

4500 m² SRF lab

PAPS SRF Facility

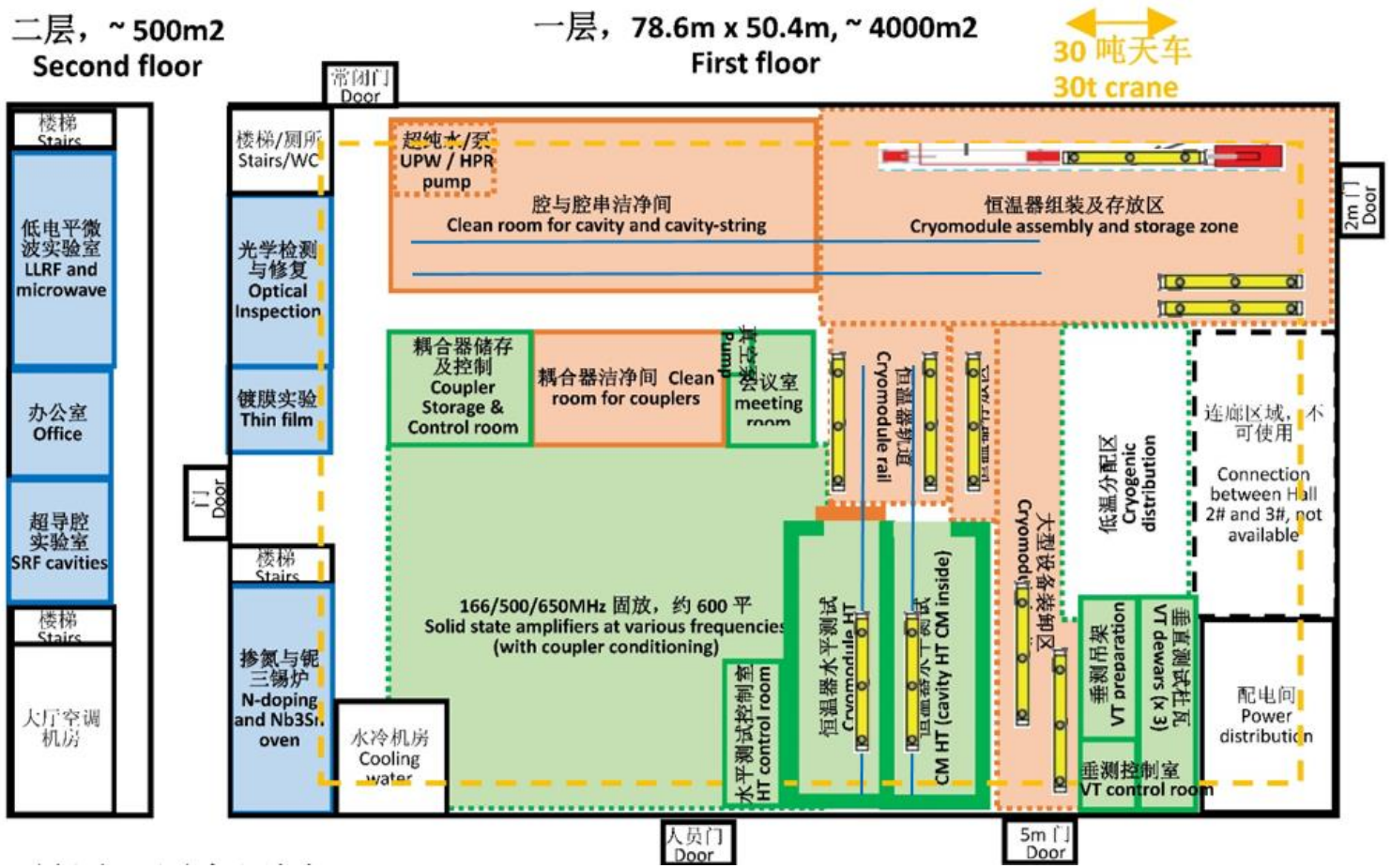

Mission:

World-leading SRF Lab for Superconducting Accelerator Projects and SRF Frontier R&D

- Two vertical test stands each with four cavities
- Coupler conditioning stands for eight couplers
- 30 m-long clean room
- 36 m-long module assembly zone
- Two module test stands
- 2.5 kW @ 4.5 K cryoplant
- Optimized layout and work flow

PAPS SRF Facility

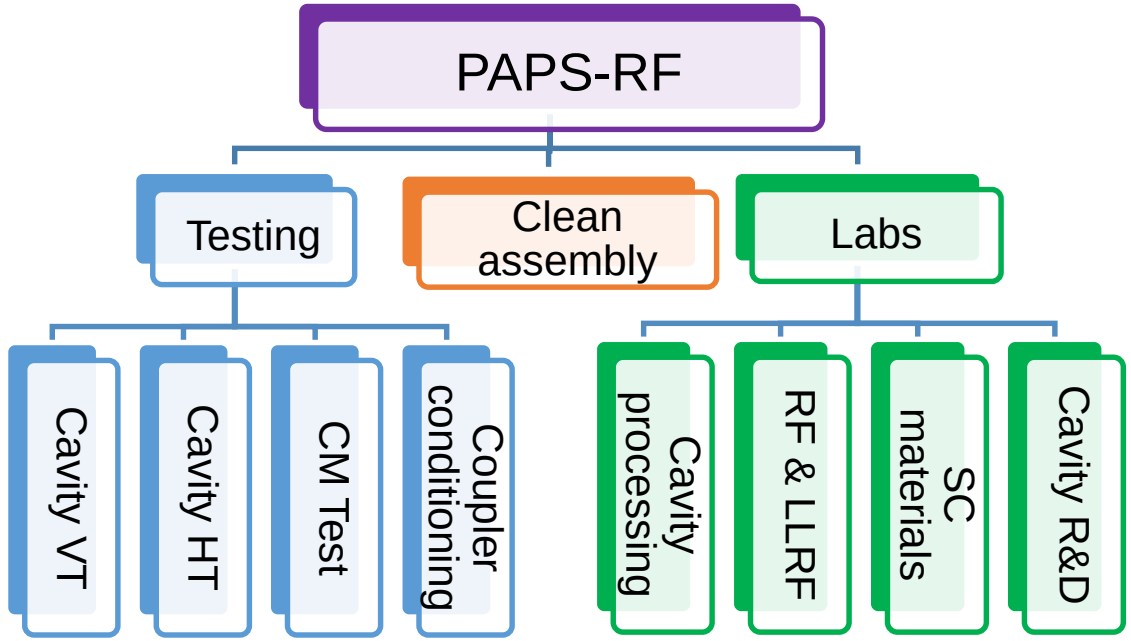

- **N-doping and Nb_3Sn furnace**
- **New material and thin film**
- **EP facility**
- **Diagnostics tools (T-mapping …)**
- **…**

- **Build Sate-of-Art SRF Infrastructure** (processing, assembly and testing)
- **Support SRF Projects** R&D and production (HEPS, CIADS, Shanghai XFEL, CEPC, ILC …)
- **Develop New SRF** material, technology and application
- **Enable Mass Production**: **200 ~ 400 cavities (couplers)** test per year, **20 cryomodules** assembly and horizontal test per year. **CEPC: ~ 500 cavities in ~ 80 modules**

Fe-based Superconductor for SRF Cavity

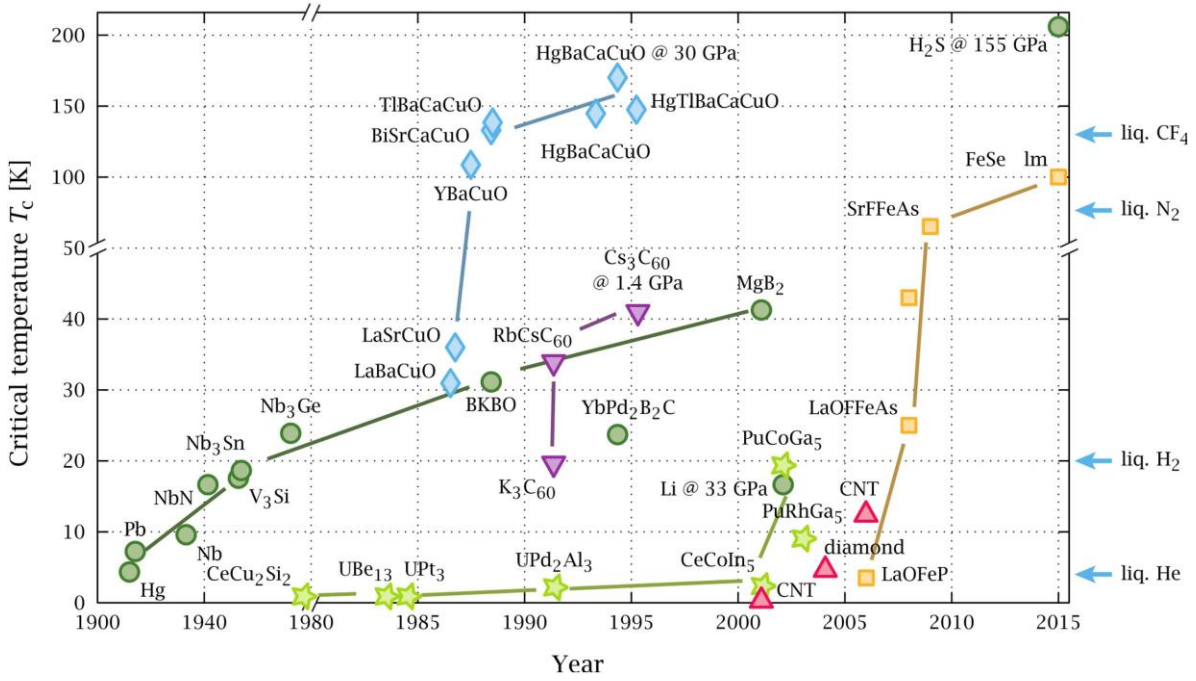

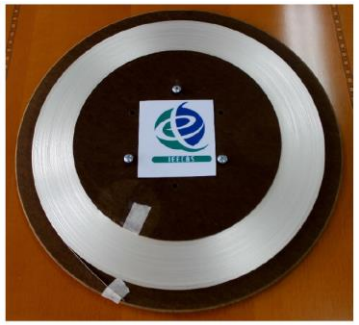

- World's first 100 m Fe-based superconducting wire by IEE, CAS, China (Aug. 2016)
- *High Tc Superconductivity Collaboration of China* (refer to Qingjin Xu's talk of this conference) will push the direction to use Fe-based superconductor in SRF.

Material	T_c (K)	ρ_n ($\mu\Omega$ cm)	$H_c(0)$ (T)	$H_{c1}(0)$ (T)	$H_{c2}(0)$ (T)	λ (nm)	Δ (meV)	ξ (nm)
Nb	9.23	2	0.2	0.18	0.28	40	1.5	35
NbN	16.2	70	0.23	0.02	15	200–350	2.6	3–5
NbTiN	17.3	35		0.03	15	150–200	2.8	5
Nb_3Sn	18	8–20	0.54	0.05	28	80–100	3.1	4
V_3Si	17	4	0.72	0.072	24.5	179	2.5	3.5
Nb_3Al	18.7	54			33	210	3	
Mo_3Re	15	10–30	0.43	0.03	3.5	140		
MgB_2	40	0.1–10	0.43	0.03	3.5–60	140	2.3 /7.2	5
Pnictides	30–55		0.5–0.9	30	50–135	200	10–20	2

For s-wave members of the pnictide family, $\Delta_{oxy} = 5$–10 meV $> \Delta_{Nb_3Sn} = 3$ meV [141]. However, these compounds have a high ρ_n (~ 1 mΩ cm $\sim 10\rho_n^{MgB_2}$), a high value of λ (180–250 nm) and low H_{c1} (~ 10 mT). R_s for these materials can still be much lower than R_s of Nb_3Sn, but a structure based on SIS multilayers is necessary (refer to next section).

A-M. Valente-Feliciano. Supercond. Sci. Technol. 29 (2016) 113002

Fe(TeSe) Thin Film Study at IHEP

- $SrTiO_3$ substrate with Nb doping (for better electrical conductivity)
- Preparation method: Pulsed Laser Deposition (PLD)
- Research on oxidation of Fe(TeSe) thin film
- Next step: make proper Fe-based material for SRF application.

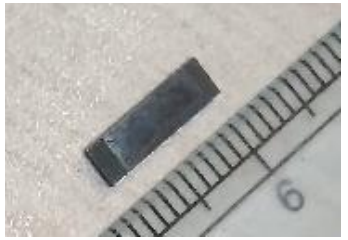

Fe(TeSe) thin film sample

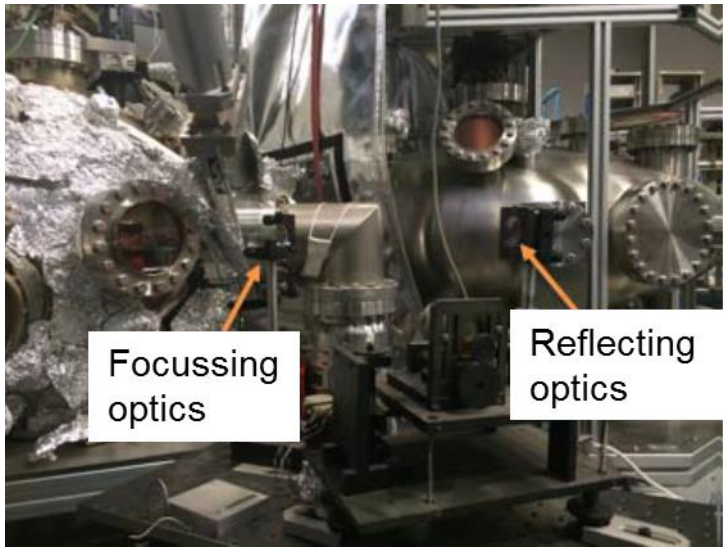

PLD Equipment

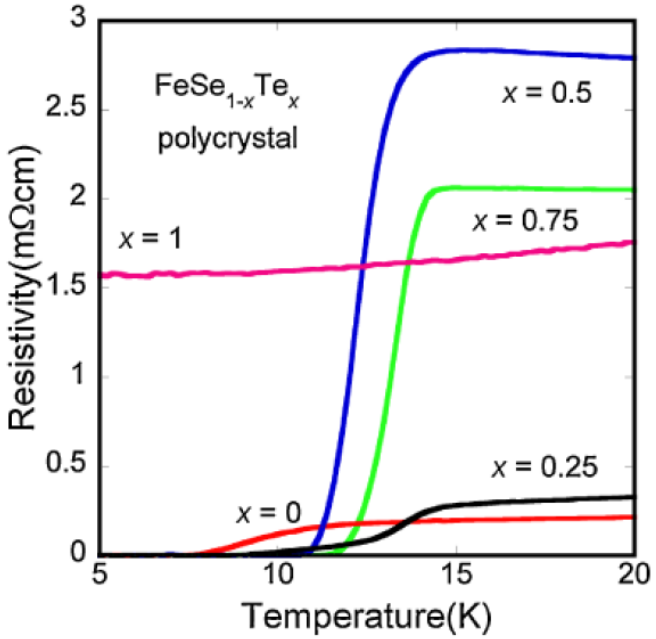

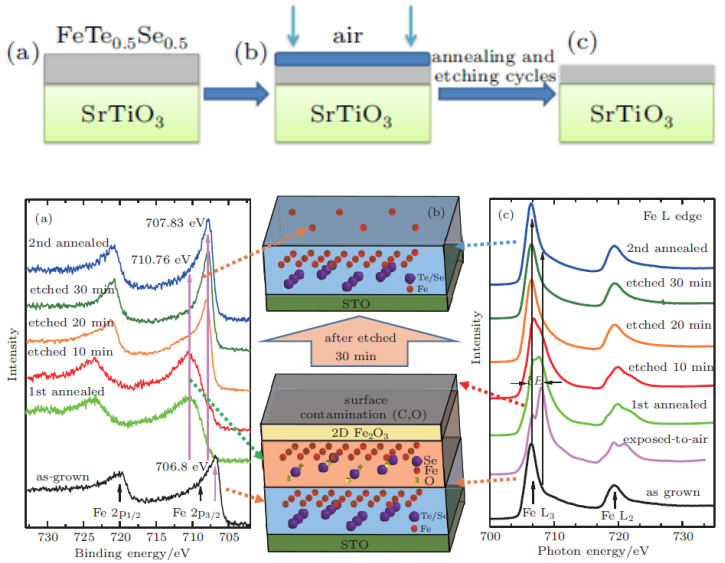

Chinese. Phys. B Vol. 25, No. 9 (2016) 097402

PAPS Beam Test System

- CW 1 ~ 10 mA
- 15 ~ 30 MeV

DC photo cathode gun

1.3 GHz test module

650 MHz test module

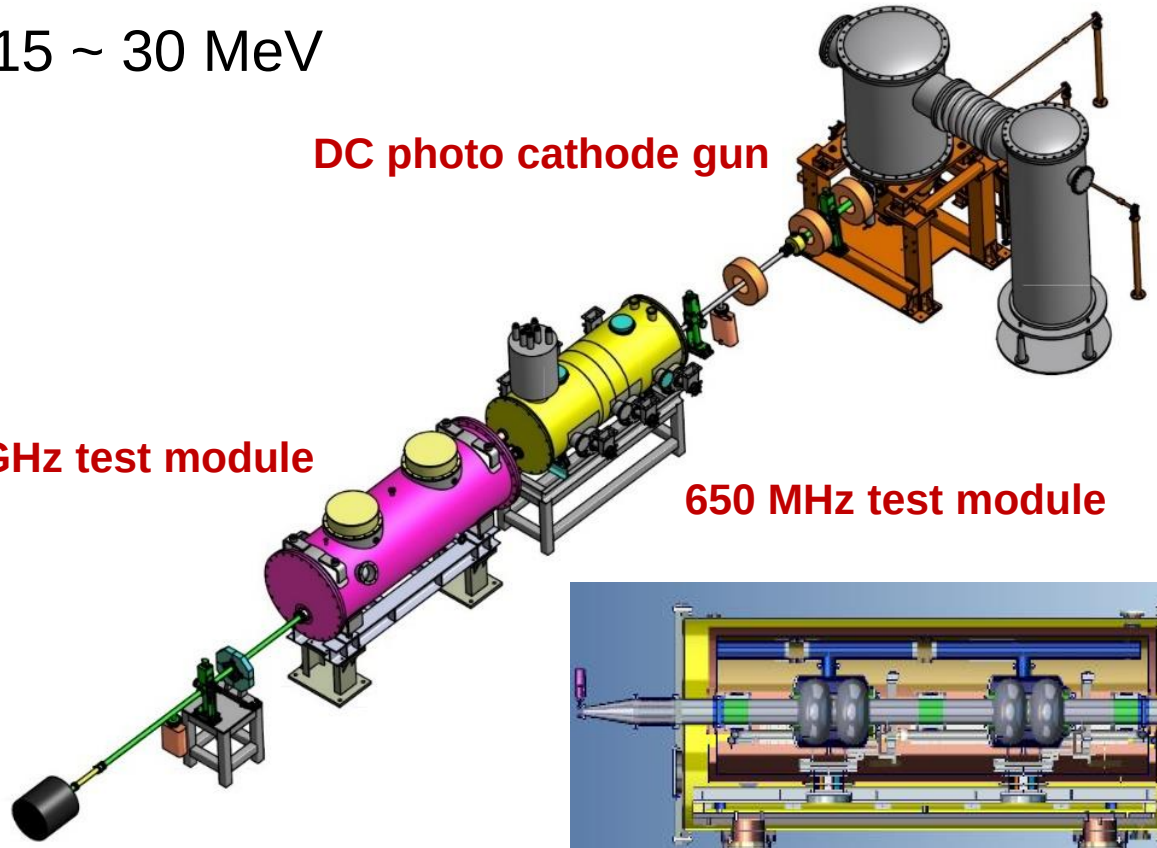

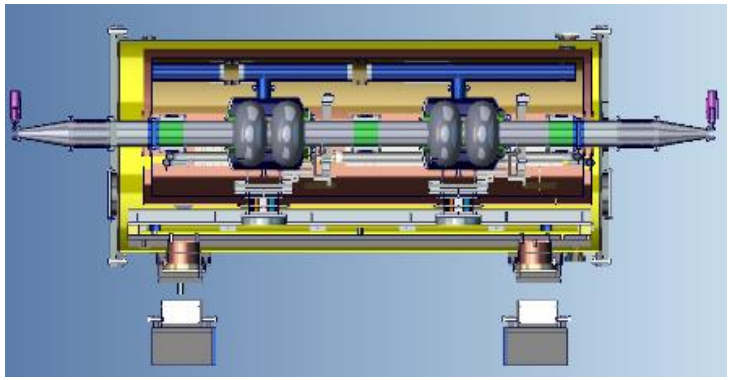

平台束流测试系统	650 MHz 组元 (2 × 2-cell 腔)				
运行模式	水平测试	低流强		高流强	
超导腔	2-cell #1 / #2	2-cell #1	2-cell #2	2-cell #1	2-cell #2
平均流强（mA）	0	1	1	10	10
束团重复频率（MHz）	0	650	650	650	650
RF频率（MHz）	650	650	650	650	650
束团电荷（pC）	0	1.54	1.54	15.4	15.4
腔有效长度（m）	0.462	0.462	0.462	0.462	0.462
R/Q（Ω）	212	212	212	212	212
加速梯度（MV/m）	20	18	18	18	18
每腔腔压（MV）	9.2	8.3	8.3	8.3	8.3
总腔压（MV）	18.5	16.6		16.6	
加速相位（deg）from-crest	0	0.0	0.0	0.0	0.0
每腔增能（MeV）	0	8.3	8.3	8.3	8.3
两腔增能（MeV）		16.6		16.6	
最佳失谐量（kHz）	0	0.000	0.000	0.000	0.000
每腔输入耦合器个数	1	1	1	1	1
匹配Q_e	/	3.9E+07	3.9E+07	3.9E+06	3.9E+06
匹配带宽（Hz）	/	17	17	166	166
设定Q_e	1.0E+07	1.0E+07	1.0E+07	3.9E+06	3.9E+06
设定带宽（Hz）	65	65	65	166	166
主耦合器Q_e调节范围	1E6 ~ 2E7				
Microphonics（Hz）	10	10	10	10	10
LDF（Hz / $(MV/m)^2$）	1	1	1	1	1
每腔输入功率（kW）	11.0	13.6	13.6	83.5	83.5
总输入功率（kW）	22.0	27.2		166.9	
每腔束流功率（kW）	0	8.3	8.3	83.2	83.2
总束流功率（kW）	0	16.6		166.3	
每腔功率源功率（kW）	20	20	20	100	100
总功率源功率（kW）	40	40		200	
功率源配置	800 kW 速调管， 150 kW 固放				
品质因数Q_0 @ 2 K	2E+10	2E+10	2E+10	2E+10	2E+10
每腔腔壁动态热负荷（W）	20.1	16.3	16.3	16.3	16.3
总腔壁动态热负荷（W）	40.2	32.6		32.6	
低温总热负荷上限 @ 2 K（W	100				
每腔损失因子*（V/pC）	/	1.74	1.74	1.74	1.74
每腔高阶模功率（W）	/	0.003	0.003	0.3	0.3
注：*束长0.6 mm					

Chinese SRF Industry and Opportunities

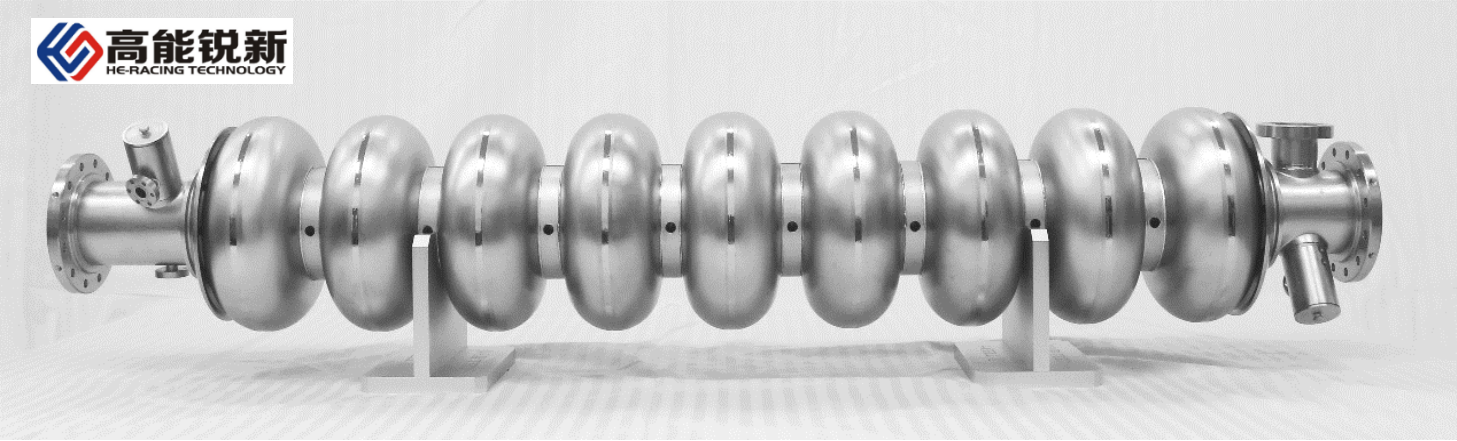

- **Niobium**: OTIC (EXFEL 35% 7 t, FRIB 50% 5 t, LCLS-II 50% 5.6 t …)
- **Cavity**: OTIC, HERT, HIT, BIAM…
- **Coupler**: HERT (ILC, CADS, RISP …), JNT …
- **Cryomodule**: WXCX (EXFEL 60% 60, LCLS-II 100% 33, FRIB), HFJN …

CIADS, HIAF, SXFEL, HEPS, CEPC… more than 2000 cavities needed in next ten years for China

Summary and Outlook

- Baseline layout and parameters for CEPC RF system established (~ 500 cavities in total: 336 main ring 650 MHz 2-cell cavities and 160 booster 1.3 GHz 9-cell cavities). Complete CDR in the end of 2017.
- Key physics issues and component design progressing well. Prototype demonstration next year. Extensive CEPC SRF technology R&D planned and launched, with support of large PAPS SRF facility.
- Ramp up CEPC SRF industrialization and international collaboration.

BRF
Thank you