“Low energy electron beams for industrial and environmental applications”
EuCARD-2 Workshop with Industry
8-9 December 2016, Warsaw Poland

Electron accelerators for radiation processing - reliability and economical aspects

Z. Zimek
Centre for Radiation Research and Technology
Institute of Nuclear Chemistry and Technology,
Warsaw, Poland
z.zimek@ichtj.waw.pl

Accelerator technology for radiation processing

Up to 3.000 accelerators have been build for radiation processing (total number of accelerators applied in science, medicine and industry amounts approximately 30.000).

Accelerator technology development is based now on new constructions and new components, what leads to progress in:

- Accelerator technology perfection (higher electrical efficiency, cost reduction);
- Reliability according to industrial standards;
- Accelerators for MW power beam level;
- Compact accelerator constructions;
- Very low energy, powerful accelerators.

Industrial application of electron accelerators	
Polymer modification	Flame resistant cables Thermo-shrinkable products Curing of tire cord Foam sheets Artificial leather Films for coatings and packaging
Sterilization/ Disinfection	Sterilization of medical products Preservation of spices, food Disinfection of grains
Environmental protection	Flue gas purification Water/wastewater treatment
Others	Curing/coating of wood, paper etc. Semiconductors Ceramic composites

Penetration [g/cm^2] = 0.37(Energy [MeV]-0.2) for one side treatment and equal entrance and exit doses

Electron energy

Although there are many different types of accelerators offering a wide range of performances ratings, only few would be suitable for particular application (Marshall R. Cleland, 1992).

Average beam power

Productivity [kg/h] = 3600 x Power [kW] x Utilization efficiency /Dose [kGy]

Accelerator selection criteria

- **Average beam power** *(productivity),*
- **Electron energy** *(penetration),*
- **Price** *(investment cost),*
- **Electrical efficiency** *(cost of accelerator exploitation),*
- **Size** *(building geometry and size),*
- **Reliability** *(availability >95%).*

Electron accelerators for radiation processing (current ratings)

Accelerator type Parameter	Direct DC	UHF 100 - 200 MHz	Linear microwaves 1.3–9.3 GHz
Av. Beam current	<2 A	<100 mA	<30 mA
Energy range	0.05–5 MeV	0.3–10 MeV	2–10 MeV
Beam power	~500 kW	700 kW	150 kW
Electrical efficiency	60 – 80 %	20 – 50 %	10 – 20 %

Direct accelerators
(transformer type)

Direct accelerators: principle of operation

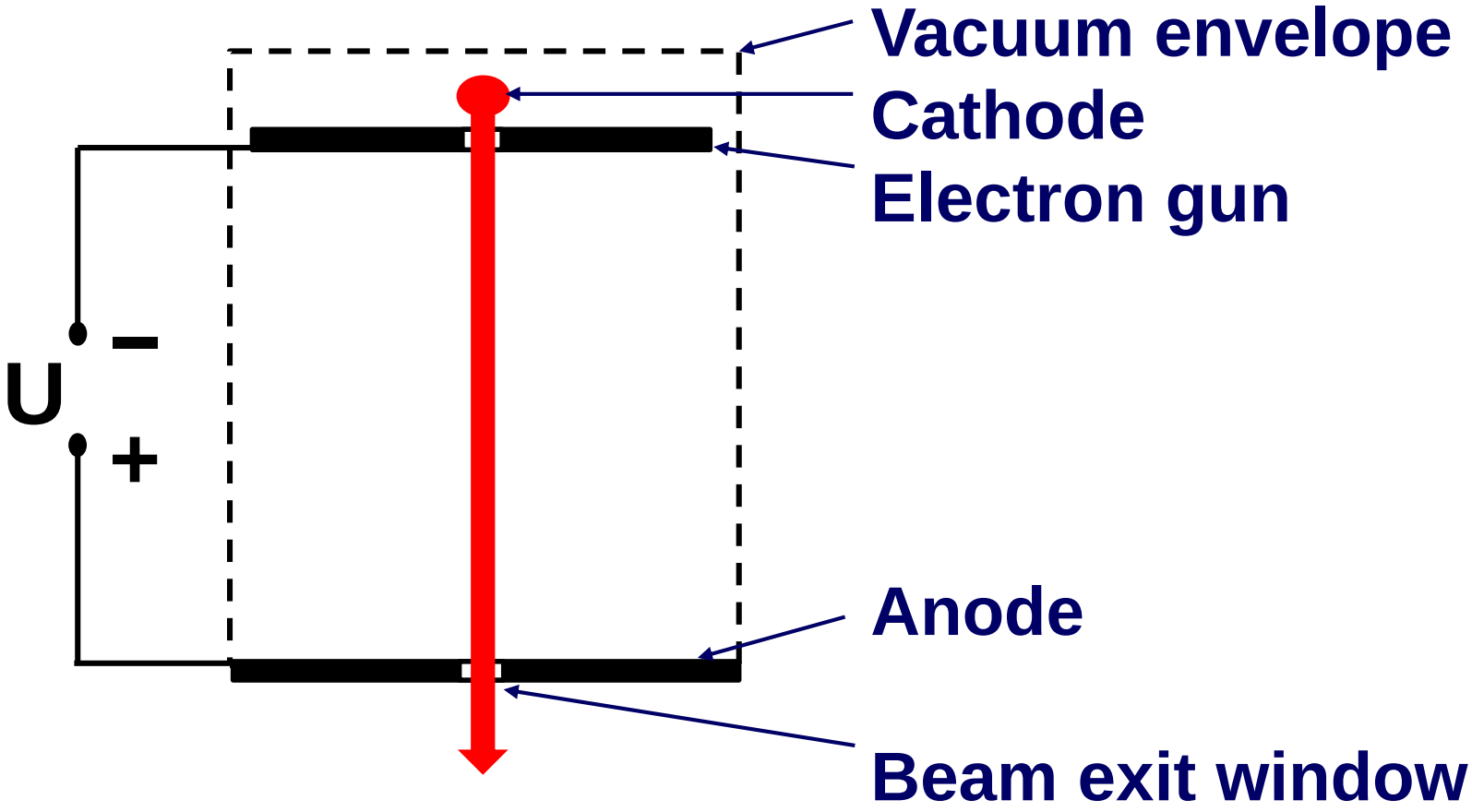

Permanent sealed, compact *ebeam* accelerators

Guaranteed 8000 operating hours. High voltage of 80 to 300 kV. Beam intensity variation typically +/-5 % (specification +/- 10 %).

Hermetically sealed by brazing and welding. Can be refurbished by milling out frame with window foil and welding in new one.

RPC "BroadBeam®"

Web/Product Width	12 to 130 inches
Accelerating Voltage	70 kV to 300 kV
Throughput	Up to 50,000 kGy - FPM
Dose Uniformity	Better than +/- 8.0%
Line Speeds	Up to 2000 FPM (600 MPM)
Beam Orientation	Horizontal, Vertical, or Angled

CROSSLINKING AB

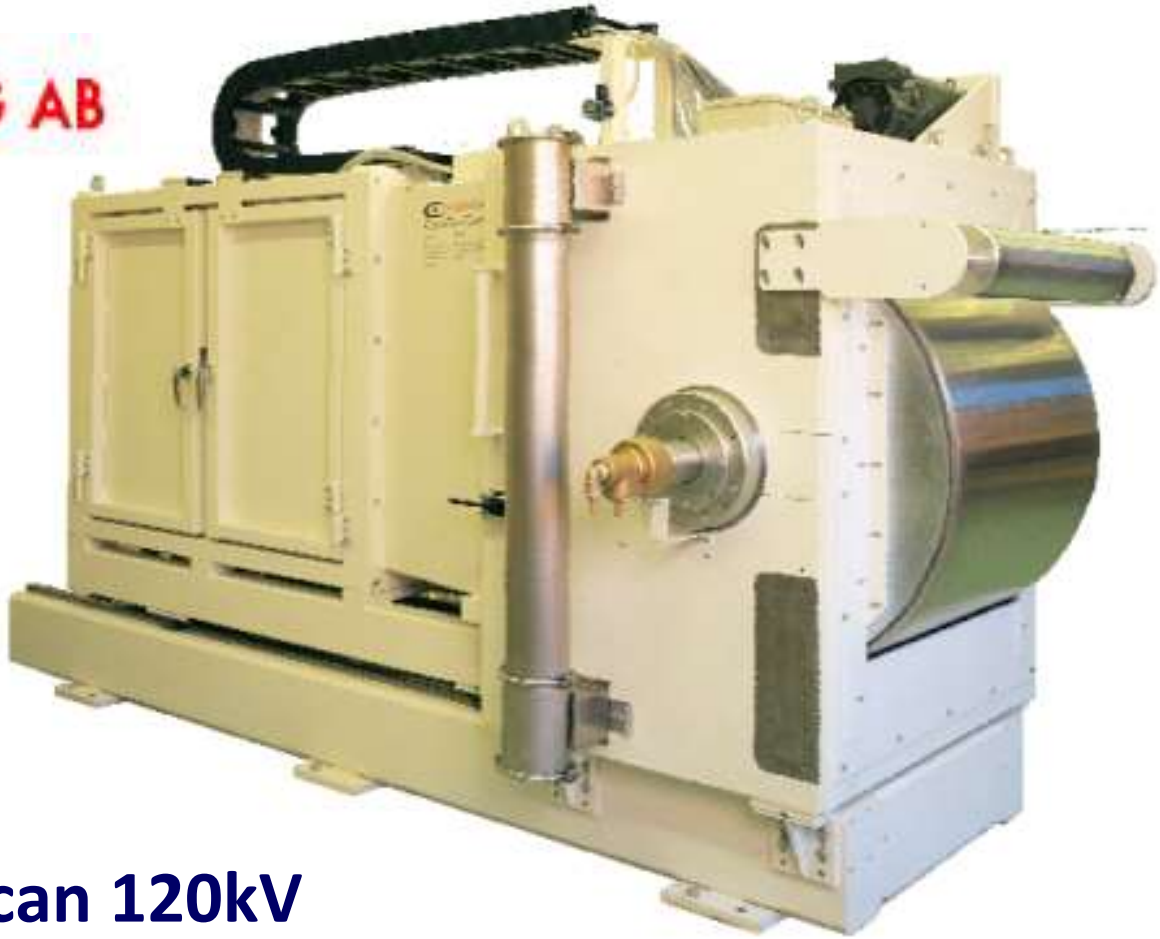

Typical data for EC-scan 120kV

Accelerating voltage: 80 – 120 keV

Beam current 0 - 200 mA

Working width: max 600 mm

Throughput: 9000 kGy m/min at 150 keV

Web speed: 10 – further m/min

ELECTRON-BEAM ACCELERATORS FOR NEW APPLICATIONS

CROSSLINKING AB

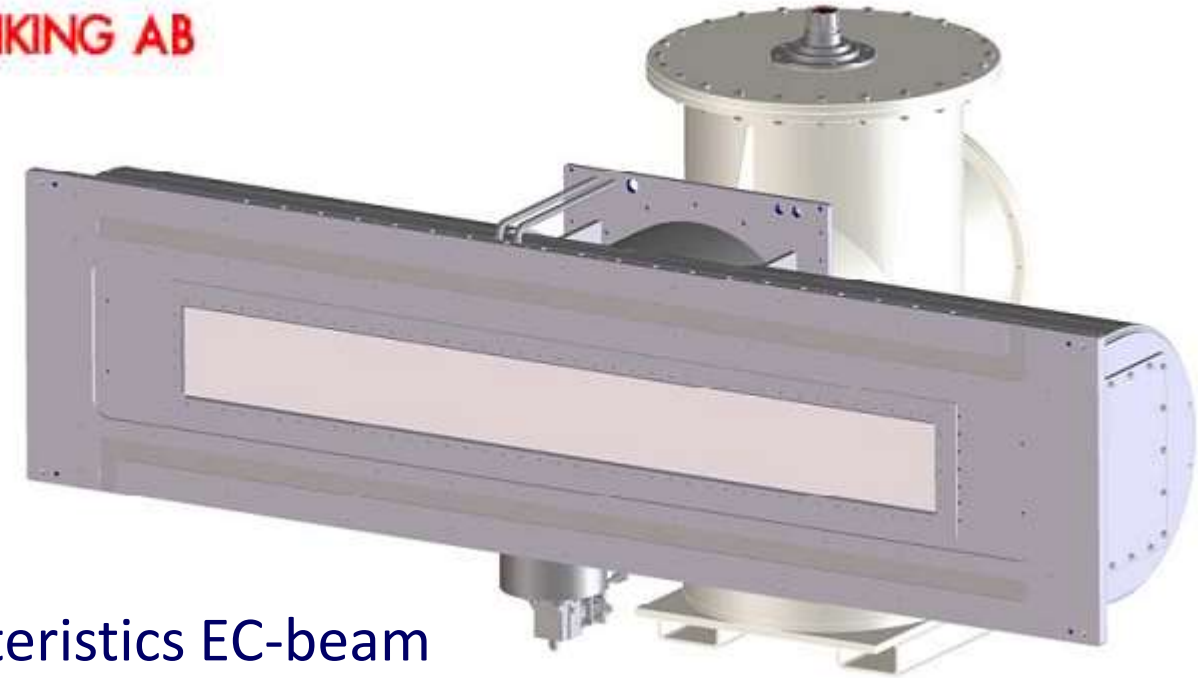

Operating characteristics EC-beam

- Acceleration voltage 75 - 250 kV
- Electron current 0 - 2000 mA
- Working width 400 - 3000 mm
- Throughput 14000 kGy m/min
- Distribution of dosage over working width < 10 %
- No gas cooling of the electron exit window necessary.

ESI – “EZCure®“

Energy Science Inc.

100 – 300 keV
ESI CB-300

ELV 12 coreless transformer accelerator

Electron energy 1 MeV
Beam power 400 kW
Frequency 1000 Hz
One power supply
Three scanners

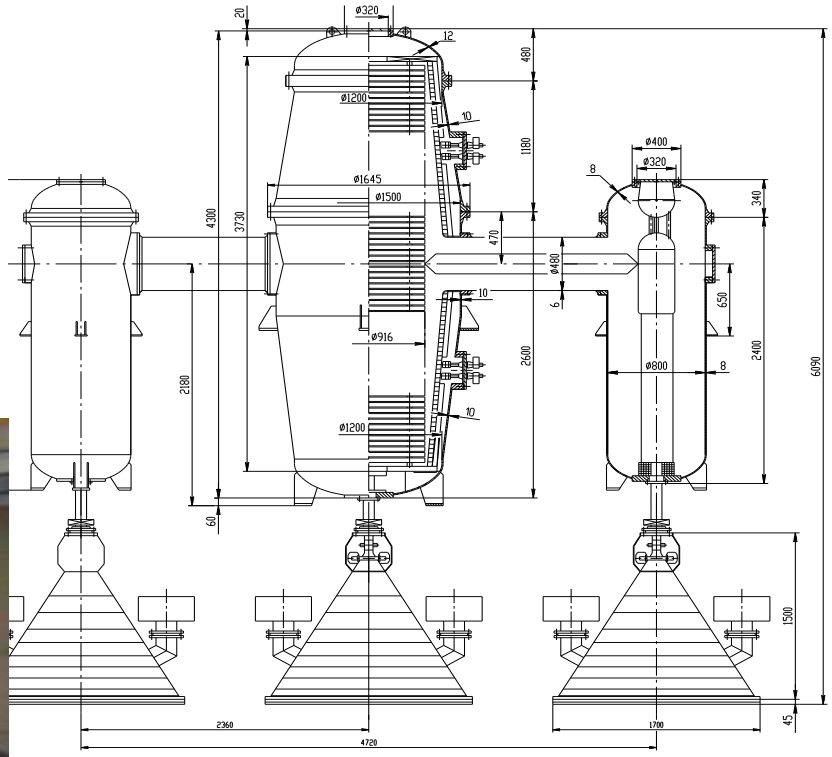

BINP, Russia

ELV 12 coreless transformer accelerator

Facility for wastewater treatment

Pomorzany Power Station (Poland)

Radiation facility for flue gas treatment (SO_2 and NO_x removal): 270 000 Nm^3/h; 0.8 MeV; 4 x 300 kW

Total beam power 1200 kW

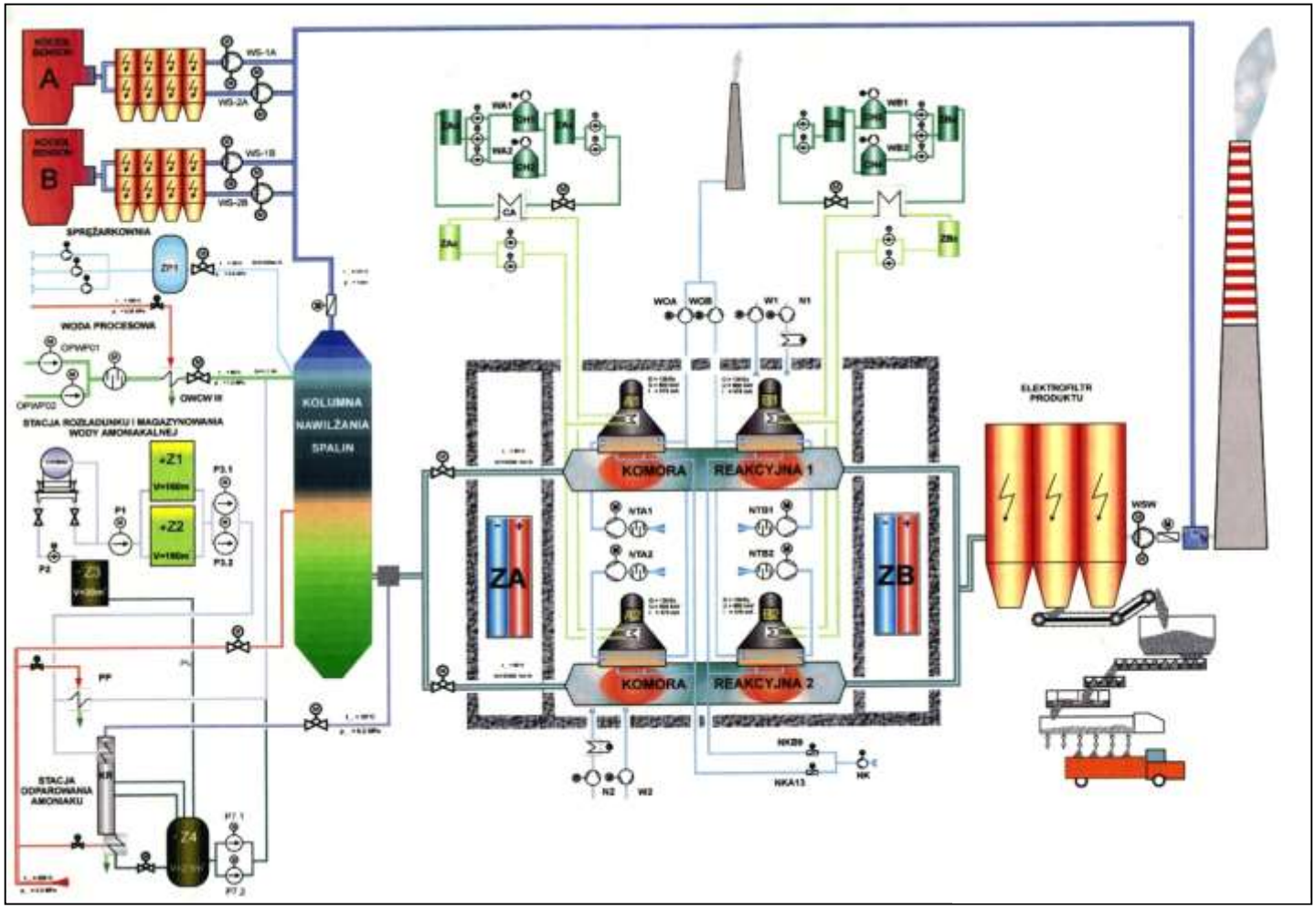

MOBILE ACCELERATOR SYSTEM

eb-TECH

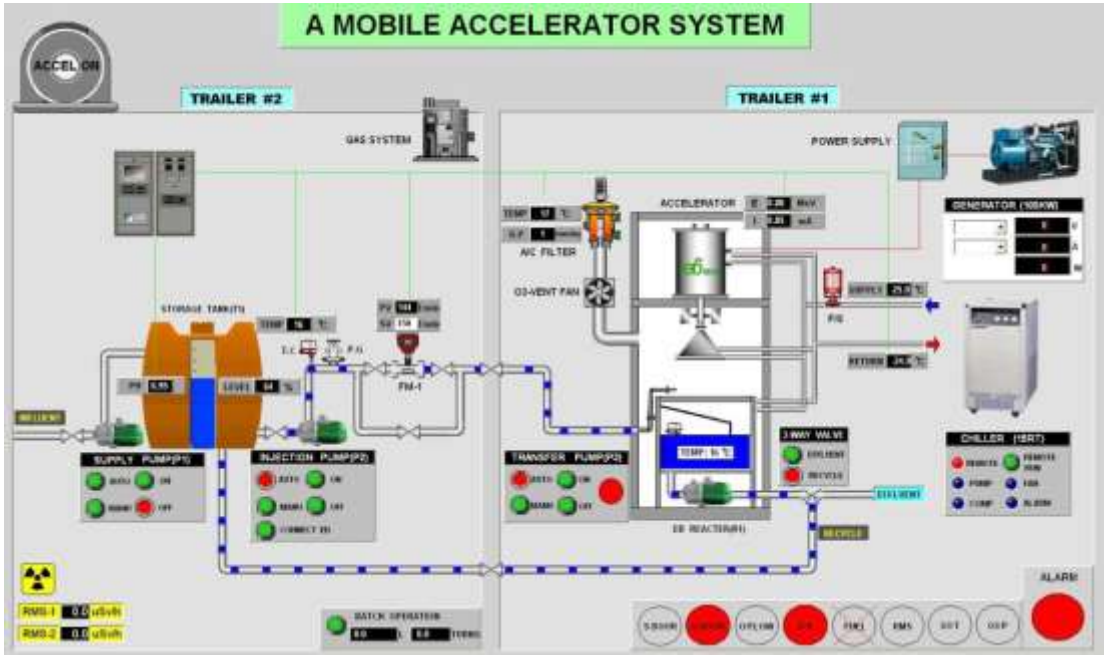

Resonance cavity accelerators

single pass or multi-pass systems

Single cavity accelerators: principle of operation

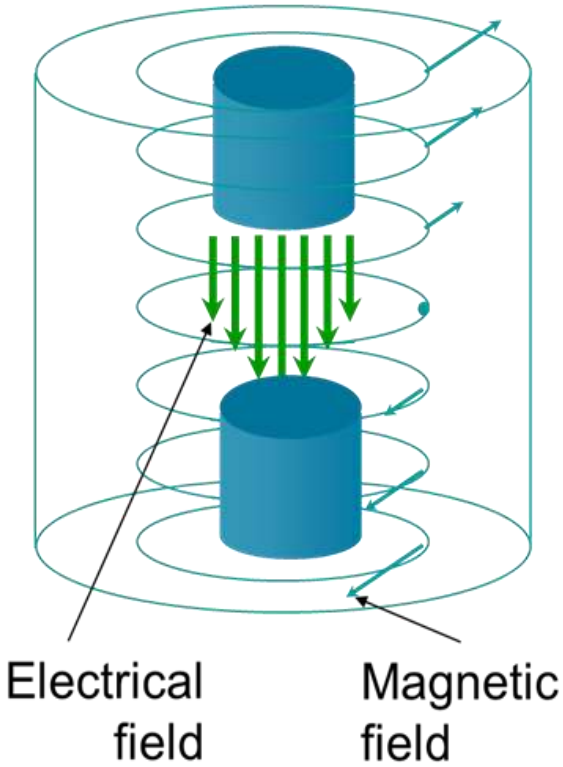

„ILU” type family

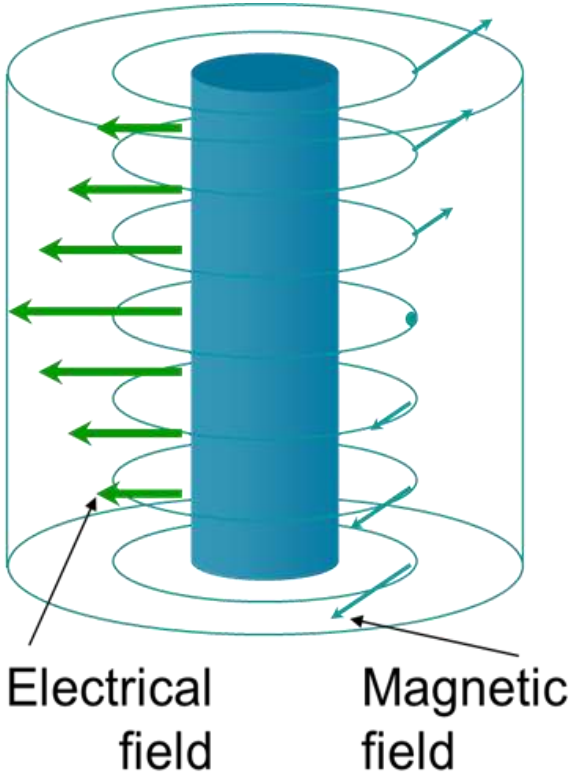

„Rhodotron” type family

ILU type accelerators, BINP, Russia

Ratings	ILU-6	ILU-8*	ILU-10	ILU-12**	ILU-14**
Electron Energy	0.5-2.5 MeV	0.8-1 MeV	4-5 MeV	5 MeV	7.5 – 10 MeV
Beam Power	20 kW	20 kW	50 kW	100/300 kW	100 kW

*Local shield weight 76t
**Multi cavity system

ILU 6 electron accelerator at pilot plant radiation facility INCT, Poland

Scanner

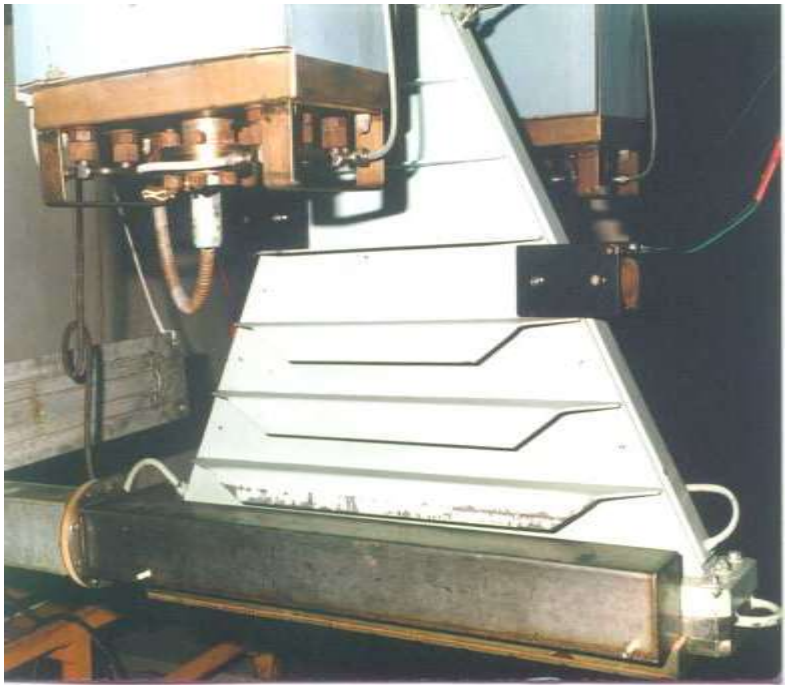

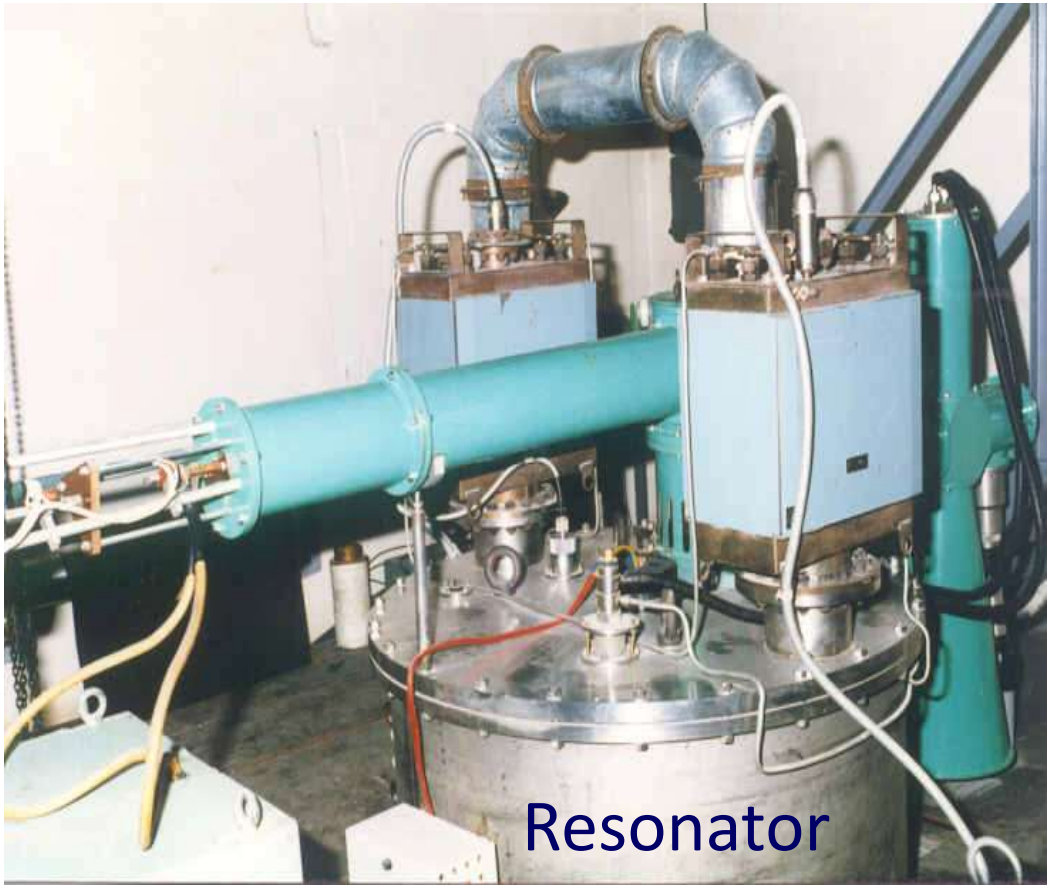

Energy	0.5-2.0 MeV
Beam power	up to 25 kW
Pulse duration	0.4 ms
Repetition rate	up to 60 Hz
Scan width	980 mm
Frequency	127 MHz

ILU-10 in Radpol SA, Poland, 2008

- Energy 5 MeV; beam power 50 kW;
- Treatment of polymer pipes (heat shrinkable tubes);
- Treatment of cables and wires;
- Movable accelerator between two technological lines.

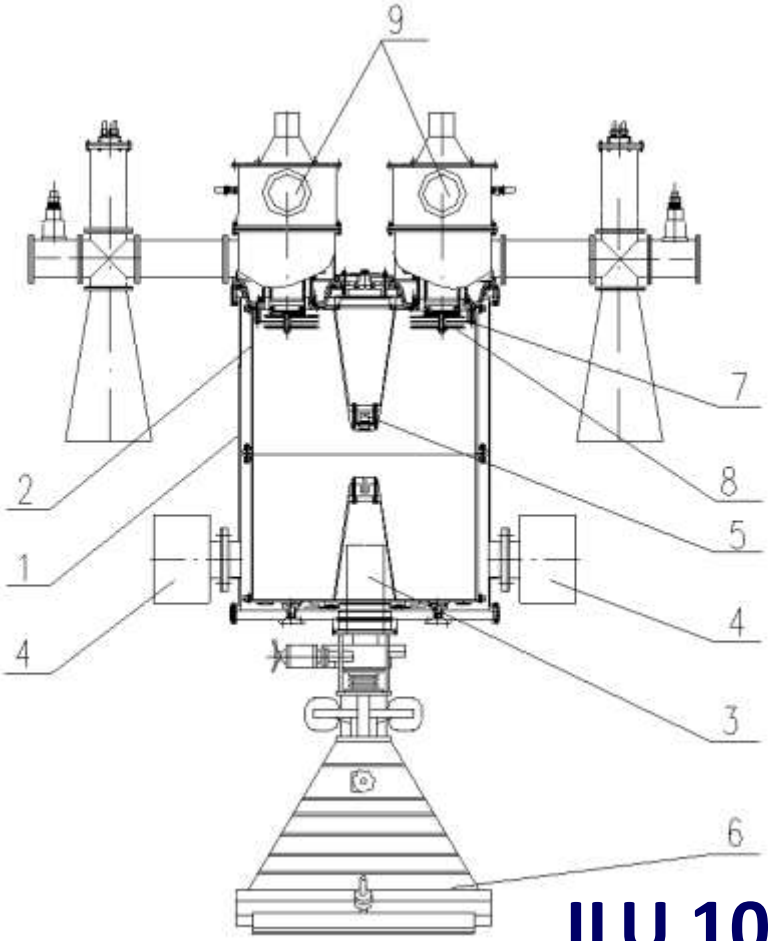

ILU 10

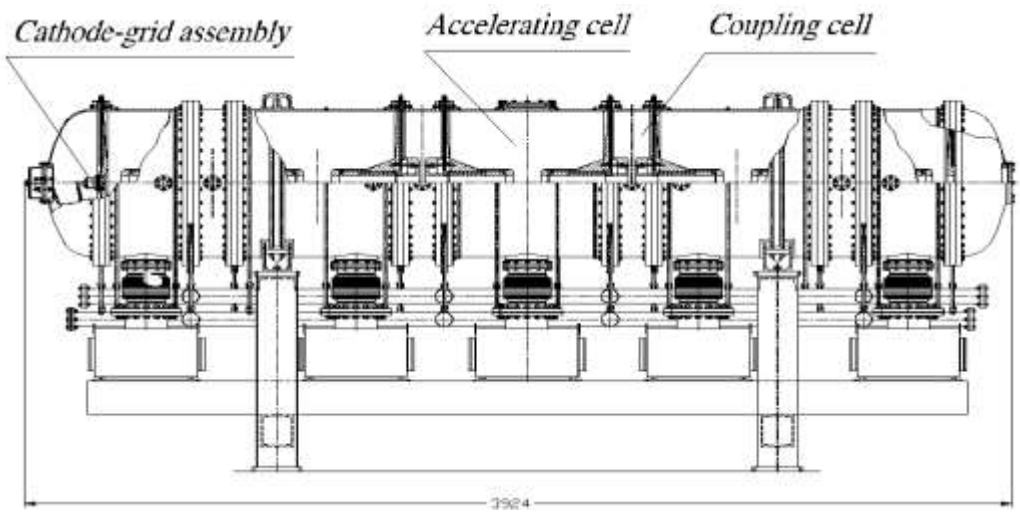

ILU 12

Coupling cell

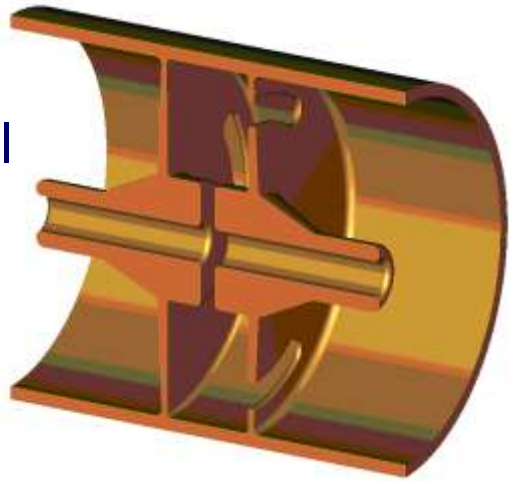

1 – vacuum tank, 2 – copper toroidal cavity, 3 – magnetic lens, 4 – ion pumps, 5 – grid-cathode unit, 6 – outlet device, 7– coupling loop support, 8 – vacuum capacitor, 9 – RF generators.

ILU 14 accelerator 10 MeV, 100 kW at sterilization facility, Russia

Energy, MeV	10	7.5
Accelerating structure efficiency, %	61	77
Total efficiency, %	26	32

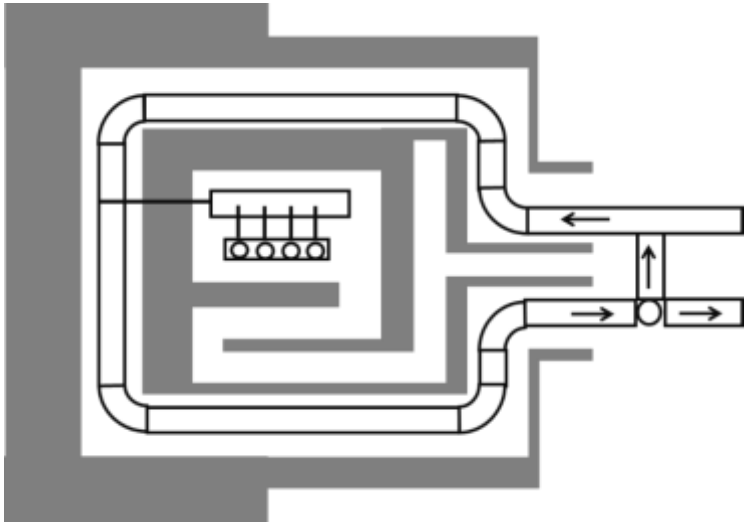

A.Bryazgin, INP, Russia

Accelerators Rhodotron type, IBA, Belgium

Starting date: December 1991

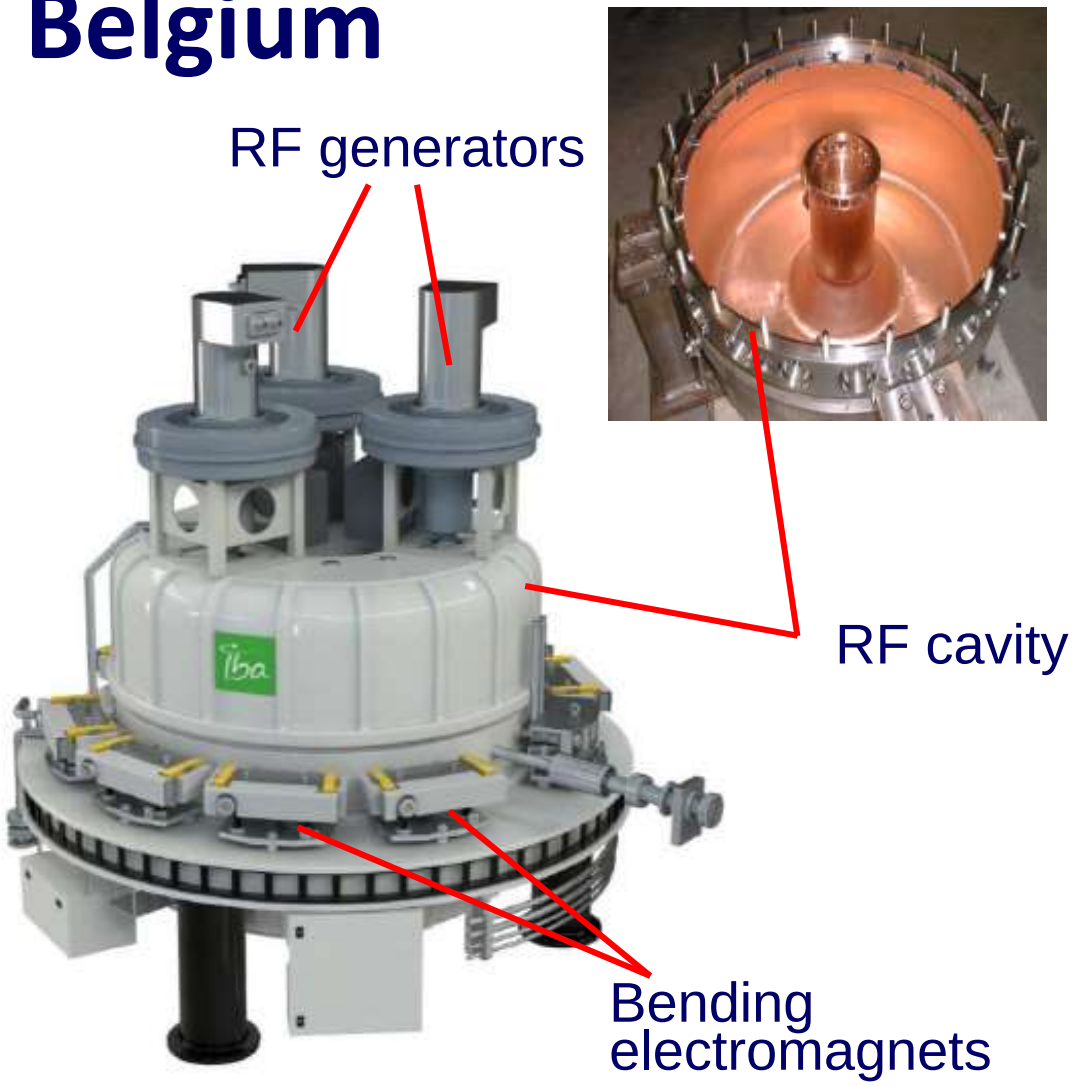

RHODOTRON TT 300, IBA, USA

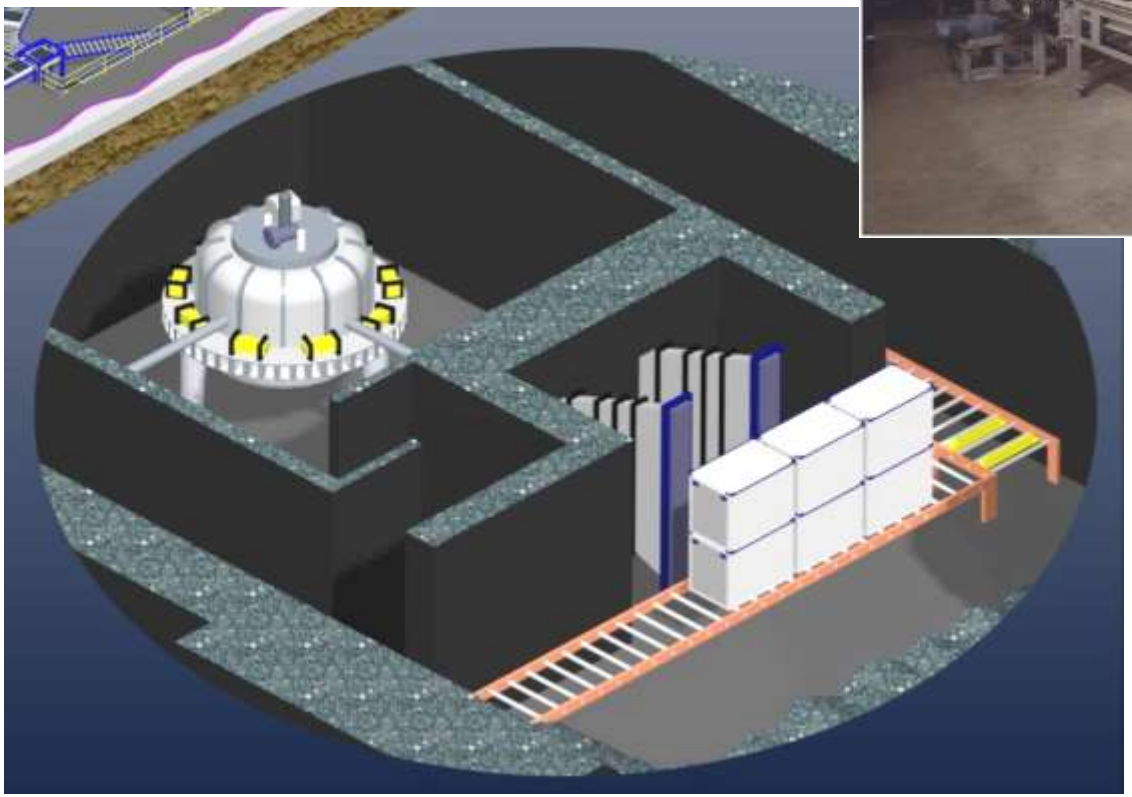

Electron energy:
5-7 MeV
Beam power:
200 kW
EB and X-ray options

Rhodotron: design and operation principles

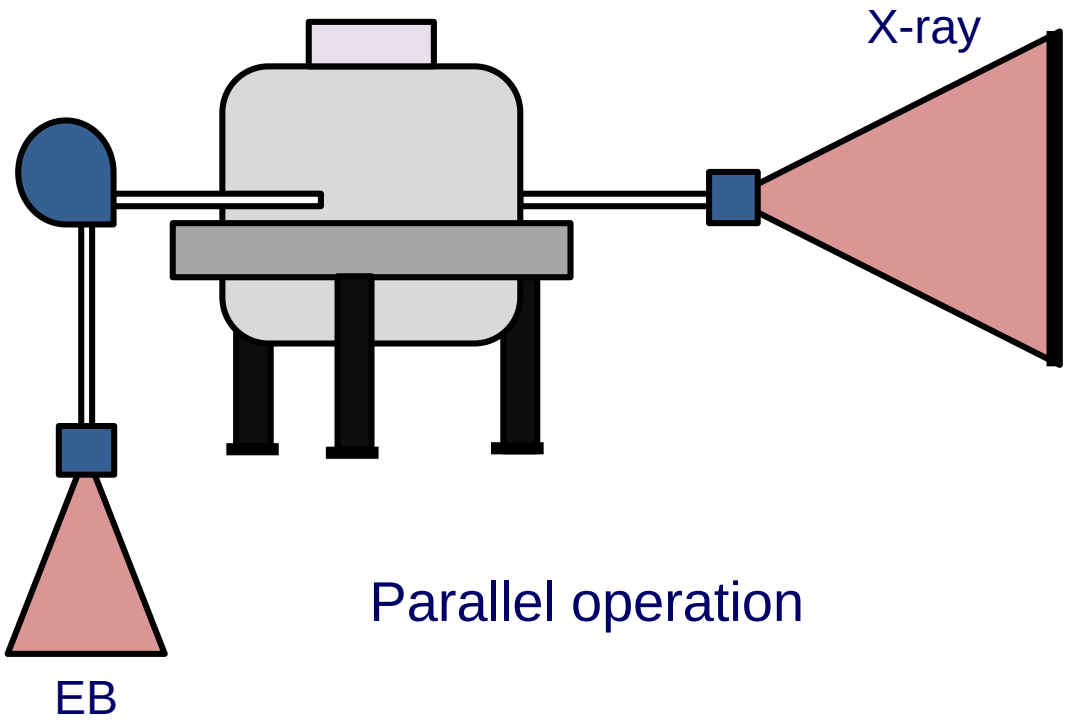

Parallel operation

M. Abs, J. Brison, P. Dethier, IBA

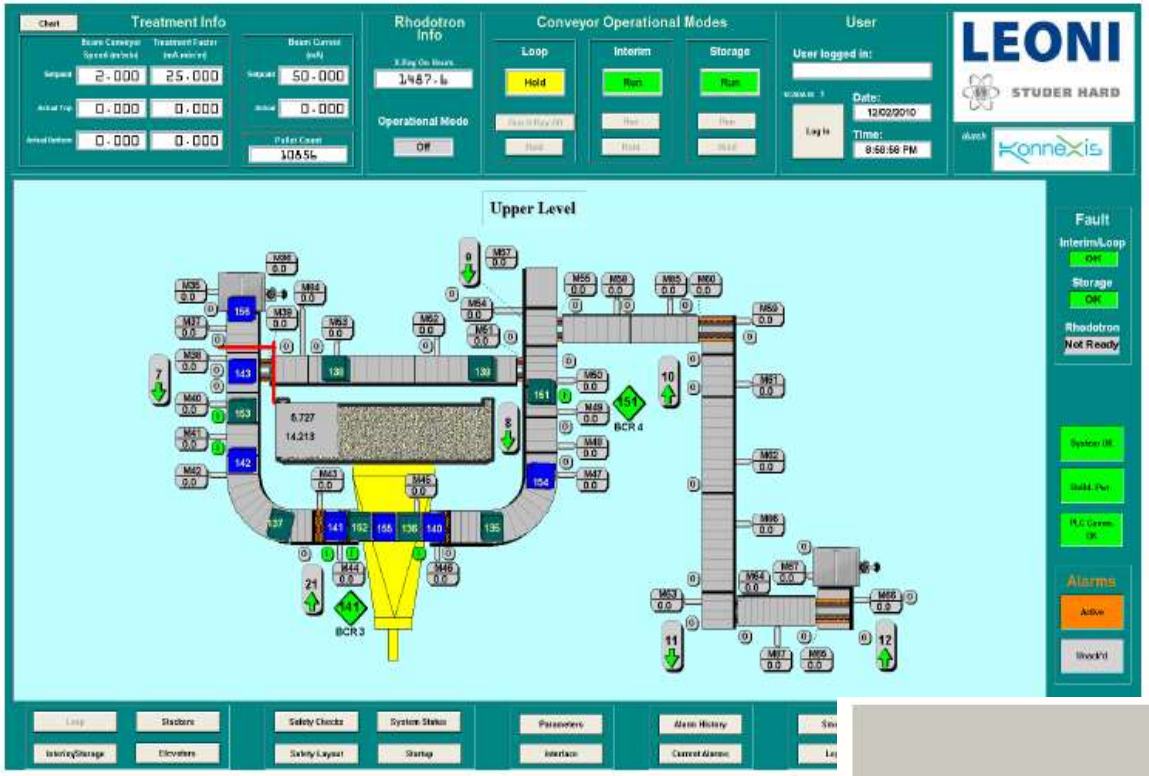

RHODOTRON, TT1000, IBA 7 MeV, 560 kW Switzerland

X-Ray (Dose 25 kGy)
product density 0.15 gr/cc,
Productivity 560 kW; 7 MeV,
15.5 m³/h,
8000/rok (9% for service)
124,000 m³.

Gamma equivalent
4.4 MCi gamma Co60.

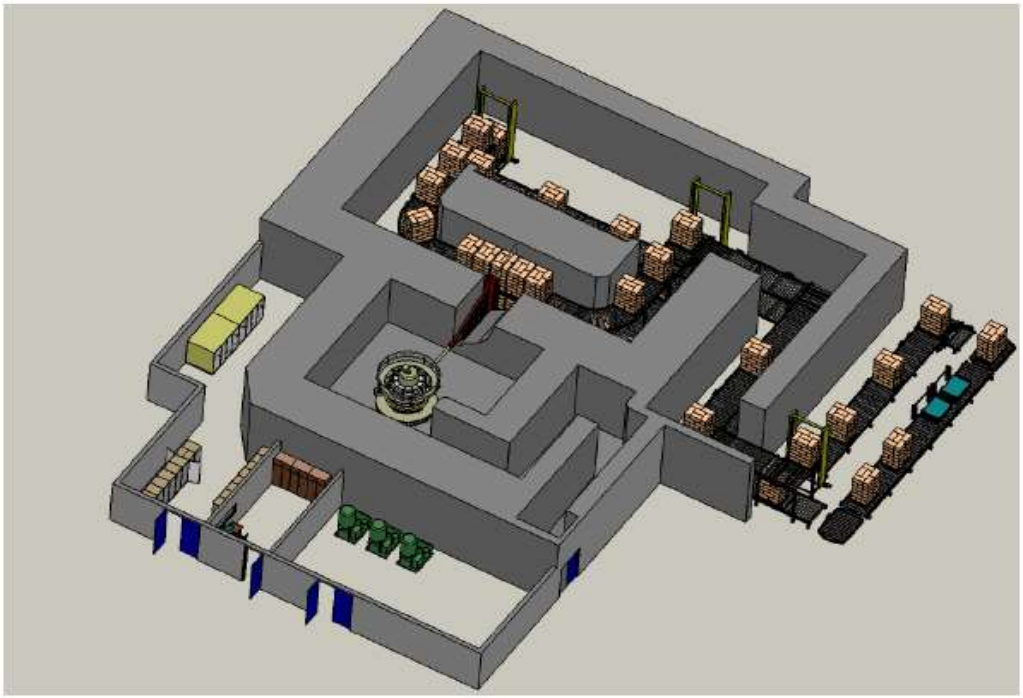

Linear electron accelerators

Linear accelerator with traveling wave

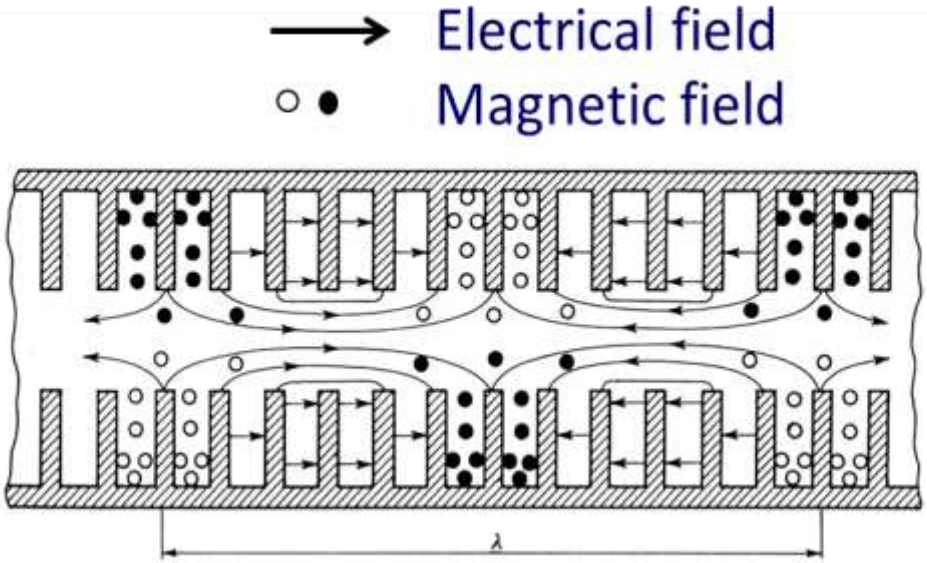

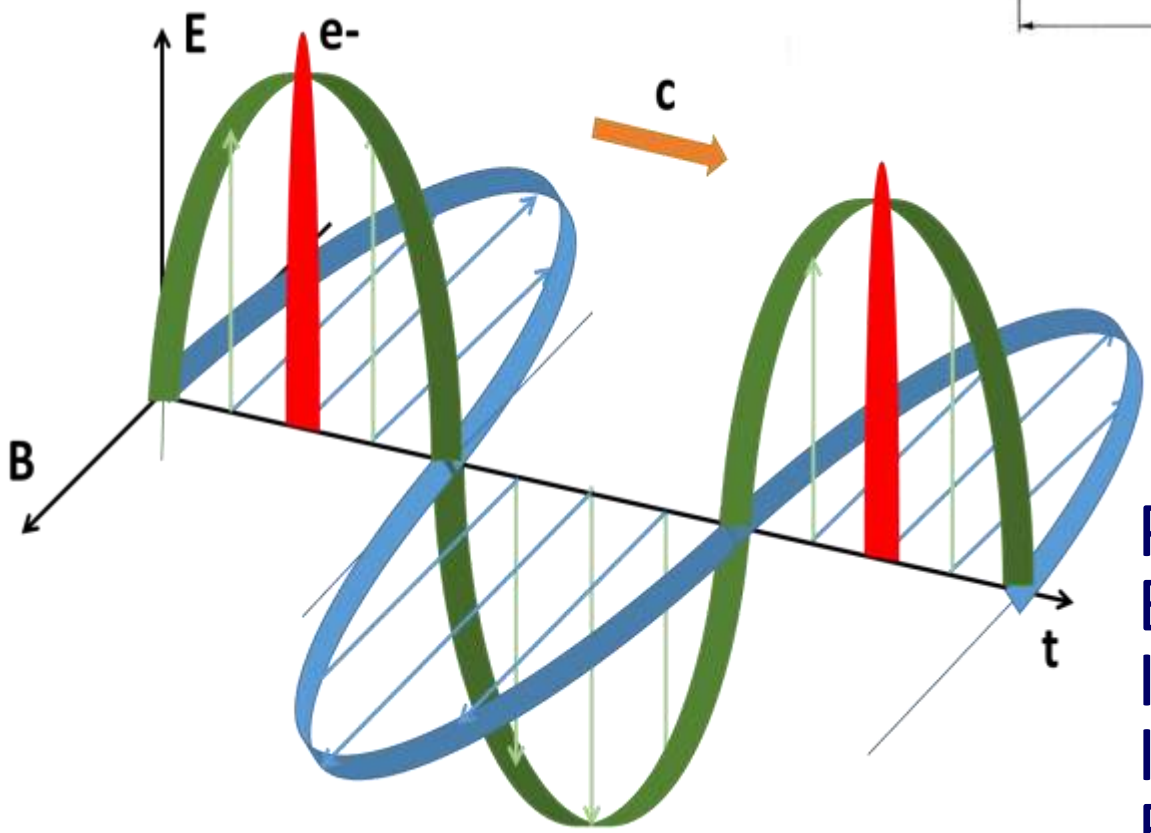

$$P_{eb} = E \times I_{av}$$

$$I_p \times \tau = I_{av} \times 1/F$$

P_{eb} – beam power
E – electron energy
I_{av} – av. beam current
I_p – pulse beam current
F – repetition rate

Linear accelerator:
10 MeV, 10 kW
Getinge Linac Technologies
Orsay, France

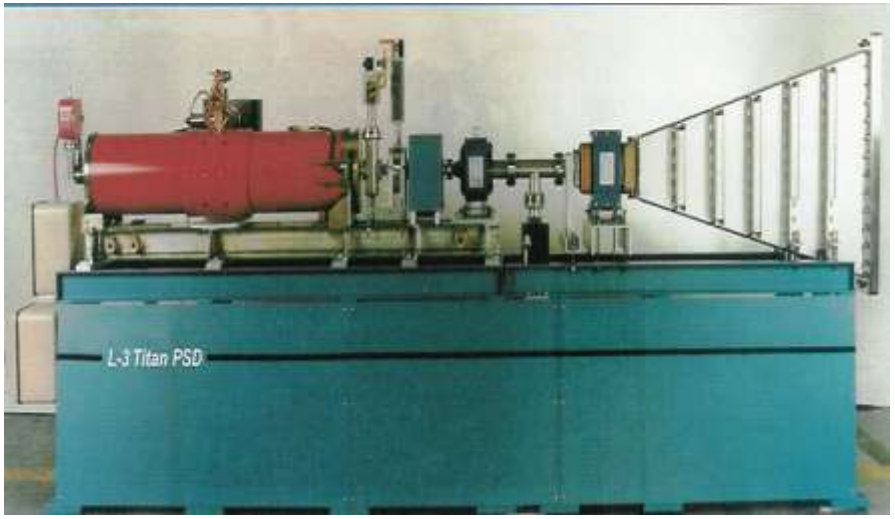

Linear accelerator:
10 MeV, 15 kW
L3 Communications, USA

Linear accelerator UEL-10-10S:
10 MeV, 10 kW
NPK LUTS NIIEFA, Russia

10 MeV, 10 kW linac

CoRAD, St Petersburg, Russia

The main features:

- Horizontally located accelerator, monorail conveyor,
- Two sides irradiation during one pass,
- Radiation shielding: concrete blocks (volume 360 m^3); facility spot: ~240 m^2,
- Solid-state modulators for klystron and electron gun, power line <75 kW,
- Control of electron energy, beam current and scan length,
- Throughput: 20-30 kGy; 55 boxes/h (40 x 40 x 60 cm^3, 19 kg).

Radiation sterilization facility, 10 MeV, 15 kW, INCT, Poland

Elektronika 10/10, „Torij”, Russia

New accelerator developments for radiation processing

eFFAG – compact CW recirculating electron accelerator

(**F**ixed-**F**ield **A**lternating **G**radient)

FFAGs

- Fixed magnetic fields like cyclotron,
- Separated components,
- Synchrotron-like dynamics.

C. Johnstone, 2014

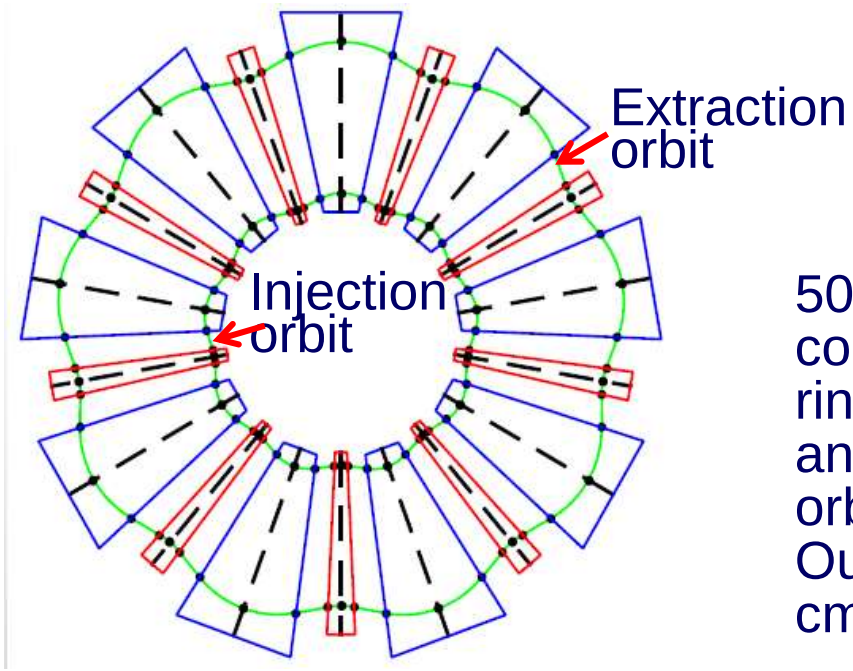

50 keV to 9 MeV compact ring with injection and extraction orbits.
Outer radius <50 cm

Permanent magnets based on ceramic ferrites: $SmCo_5$ or NdFeB could be used.

Market case for compact CW effags

- Compact, 1 m diameter, transportable,
- High current – 1-2 mA,
- No power supplies for magnets,
- Inexpensive components.

- A single 100-200 keV cavity (as in cyclotron),
- 45-90 acceleration turns,
- Duty cycle: 1ns/10 ns ~10%,
- Space charge limited to ~10^9 electrons/RF bunch
- For 100 MHz cavity (10 ns bunch spacing),
- Electron energy 9 MeV,
- Beam current 1.6 mA,
- Average beam power ~140 kW.

Compact CW linac for radiation technologies

Beam energy: 1 MeV
Beam current: 25 mA
Maximum beam power: 25 kW
Dimensions: 0.5x0.9x1.4 m
Gun/klystron HV: 15 kV
Power consumption: ~75 kW
Electrical efficiency: ~33%

D.S. Yurov et al., RuPAC 2012

CW multi-beam klystron KU-399A

Superconducting Radio Frequency compact, high power, electron linac 2-40 MeV, 100 kW

350 MHz, 3 accelerating gaps
Electron bunch length 5 ps

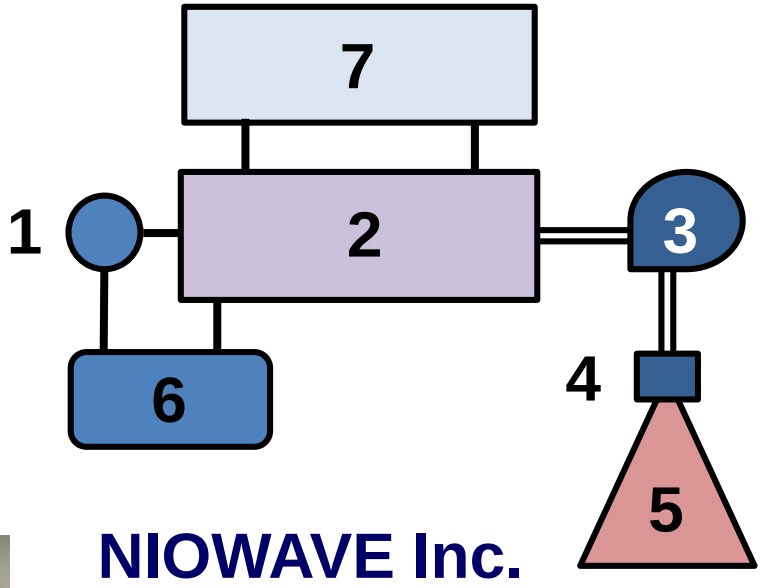

NIOWAVE Inc.

1. Electron gun
2. Superconducting linac
3. Bending magnet
4. Scanning magnet
5. Output chamber
6. Microwave power
7. Helium cryoplant

Reliability/availability of industrial accelerators

RELIABILITY: **PROBABILITY** that a system can perform its intended function for a specified time interval under stated conditions.

➡ *High reliability is required when repair of sensitive sub-components are long (or difficult)*

AVAILABILITY: fraction of **TIME** during which a system meets its specification.

➡ *High availability is required if continuous service is priority.*

Low availability

- Prototype accelerator construction *(limited exploitation experience),*
- Parameters on the edge of present limits *(unproven working conditions),*
- Components with limited life time *(magnetron)*
- Difficulties in spare parts availability *(limited access),*
- Poor accelerator reliability *(improper design and poor quality components).*

Quality requirements

- Quality of components and subsystems,
- Design quality,
- Quality of exploitation and servicing.

Parallel efforts are necessary regarding: components, design, exploitation and servicing quality to achieve suitable accelerator availability (reliability). Share reliability experience policy is also needed.

Reliability chain

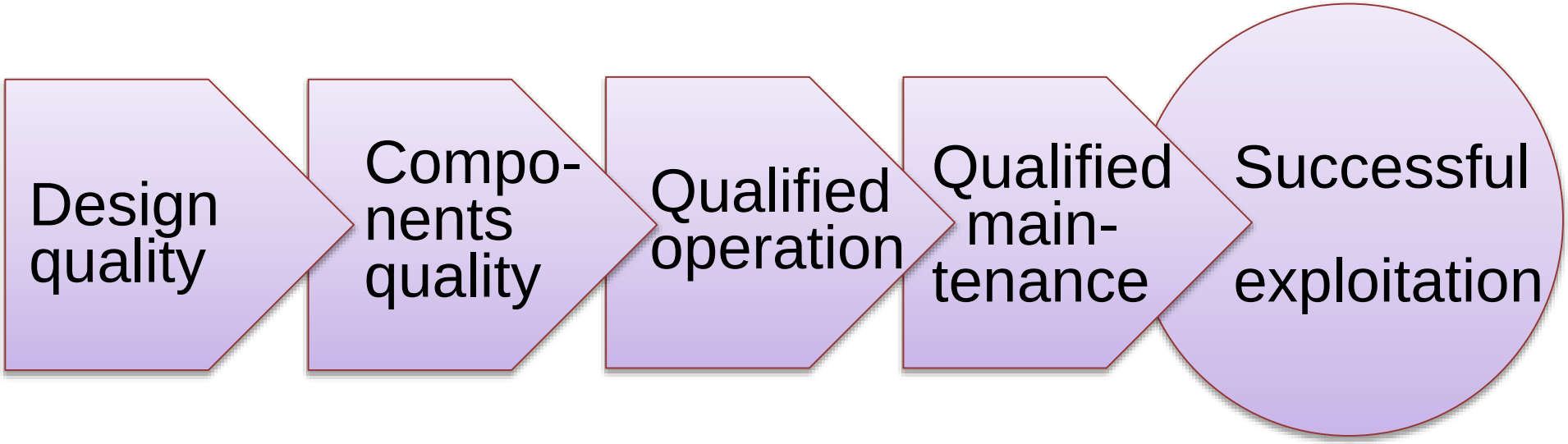

“Electron10” accelerator in the line for production of heat-shrinkage anti-corrosion coatings (0.75 MeV; 45 kW)

- Gun life time – 3520 h (average for 5 years);
- Window foil life time 3230 h (average for 5 years)

“Aurora-5” accelerator in the line producing foamed polyethylene (0.6 MeV; 30 kW)

- Gun life time – 3000 h
- Window foil life time 3000-4500 h

Exploitation of accelerator facility

- Irradiation (95-98%),
- Regular maintenance activity (per day, week, ½ year),
- Servicing due to unexpected break downs.

Maintenance and service principles

- Personnel qualification,
- In house activity (maintenance and servicing),
- Service provided by accelerator manufacturer.

Maintenance procedures

- Regular replacement of water and air filters,
- Regular replacement of belts, hoses, lubricants,
- Vibration/frequency analysis of rotating equipment (3 months cycle), IR detection of electrical connections (3 years cycle),
- Cleaning of HV cables and components (½ year),

Repair procedures

- Fault detection and diagnosis process,
- Preparation time needed to start the repair,
- Fault correction,
- Post-repair parameters verification,
- Restart of the system.

Second hand accelerators

Safe industrial electron accelerators operation in extended period of exploitation became a question after 30 years long period in service. It is due to sometime second hand accelerators are offered on the market. The evaluation should be performed to establish critical parameters like:

- Accelerator reliability (availability),
- Access to the spare parts and cost of accelerator servicing,
- Safety interlocks condition and reliability,
- Quality of cables, wires and rubber tubes which are irradiated by scattered radiation (in some cases replacement is needed in 10-15 years intervals).

Long accelerators exploitation

Positive answer on above topics may allow on successful accelerator exploitation in extended period of time. Such evaluation should be repeated in 2-5 years period to avoid rapid change in accelerator availability.

More conservative direct (transformer) accelerator construction is better suited for longer exploitation period to compare with microwave linacs where microwave components with limited life period are applied. Progress in development of microwave components creates difficulties in access to old fashioned spare parts.

Economical aspects

- Cost reduction is one of the key factors of successful radiation technology implementation.
- Annual cash flow projections are common techniques used for analyses of economic option.
- Economical analysis based on annual fixed and variable costs evaluation is very useful to recognize accelerator facility economical condition.

Estimated investment costs referred to electron accelerator price

❖ Shielding walls, ventilation	**15 %**
❖ Building with armature	**30 %**
❖ Technological equipment	**20 %**
❖ Process control system	**5 %**
❖ Design and permission	**10 %**
❖ Installation and validation	**10-20 %**
❖ Amortization (10 years)	**10 %**
❖ Service costs (fixed/variable)	**3/5 %**
Total	**~120 %**

$$K_i = 2{,}2\ K_{acc}$$

Amortization is the process of decreasing for an amount over a period

Annual amortization costs

$$K_a = K_i \{i / [1 - (1 + i)^{-n}]\}$$

where:

Ki – investment costs,

i – capital interest [%],

n – facility usefulness [years],

for: i = 8 %; n = 15 years **$K_a = K_i$ 0,117**

for: i = 8 %; n = 5 years **$K_a = K_i$ 0,25**

Capital costs (investment)

Direct costs

- The preparation of the stand;
- Construction of the building;
- Technological equipment;

…

Indirect costs

- Project management;
- Facility design;
- Reserve;

…

Exploitation costs

Variable costs

- Labor (exploitation, supervision);
- Electricity, water, pressured air, others;
- Spare parts;

…

Fixed costs:

- Administrative costs with overheads;
- Security, amortization, credit;
- Taxes including land tax;

…

Cost rate of one beam hour

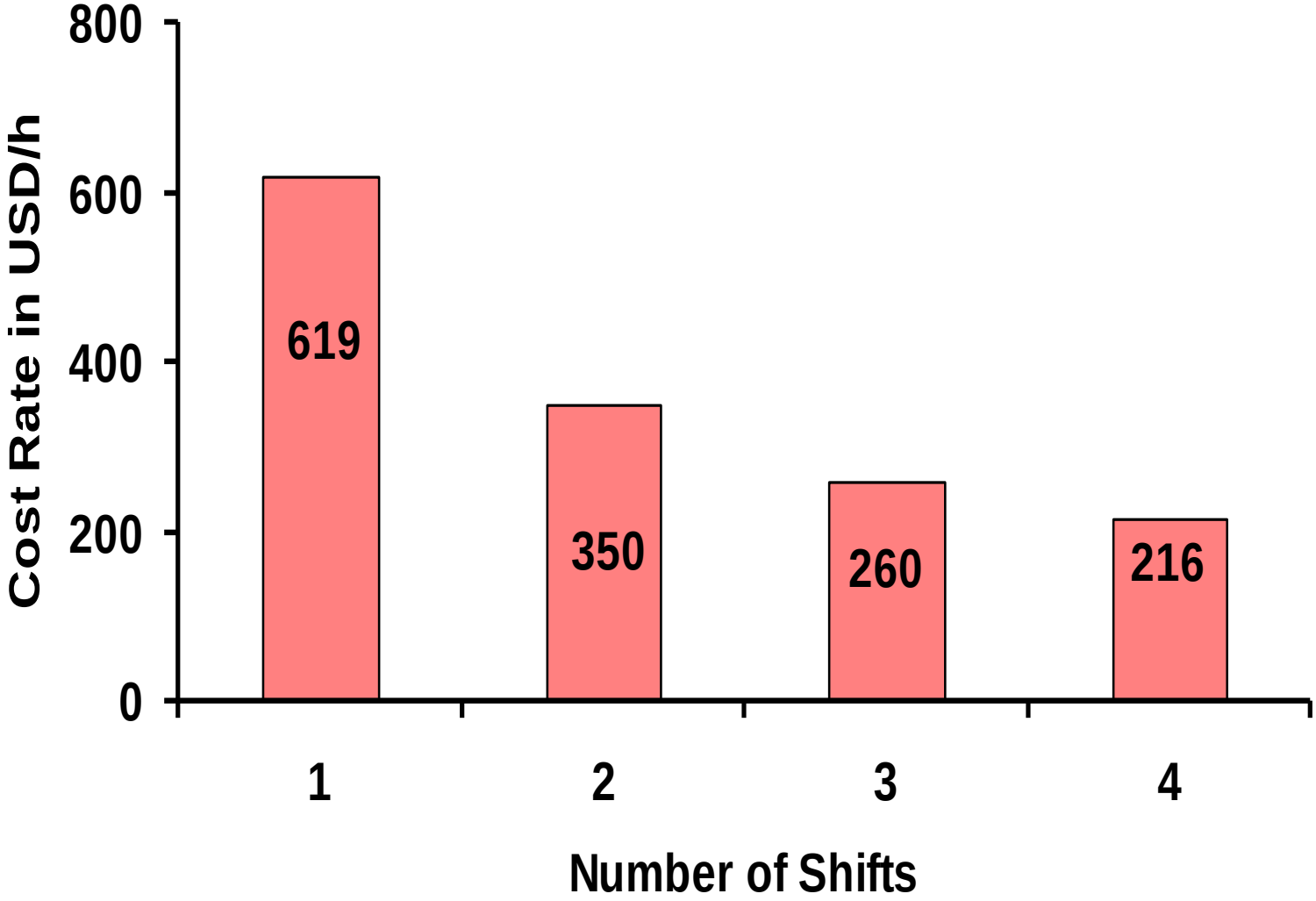

Factors influence pay back period

Scenario	Description	Pay back period in years
Postulated	According to plan	5
Low service cost	-20 %	8
Higher work time	4800 h/year	4
Lower work time	3200 h/year	7
Low efficiency	-20 %	6
Higher investment cost	+10 %	6
Delayed start up	3 months	6

- In general, electron beam technology seems to have the low operating cost despite its moderate to high capital costs. The high capital cost of technology may be compensated by its relatively low annual operating costs.

- Full set of technical information should be collected to describe accelerator quality and evaluate the risk connected with certain accelerator design. Disadvantages and advantages should be discussed in details to optimize a final decision regarding accelerator selection.

CONCLUSIONS

Characteristics steps can be recognized in the past of accelerator development. Present stage of accelerator technology perfection includes: cost effectiveness, reliability, compactness and introduction of MW beam power level.

Demands coming from growing fields of radiation processing technology implementation have a strong impact on R&D process of accelerator technology.

Any practical accelerator construction must be compromise between size, efficiency and cost.

The electrical efficiency is important parameter for high power accelerators. Special attention should be devoted to optimize electrical energy consumption for accelerator and auxiliary equipment installed in radiation facility.

The most important tool for each application is not the accelerator but the beam. Radiation facility must satisfy the beam specifications for a given application.

Initial capital cost, operating cost and reliability of the radiation facility play an crucial role in any industrial (for-profit) applications.

Users are always interested in lower total cost, so new technologies to increase the return on investment are always welcome.

New systems must be proven in an industrial confirmed acceptance, so introduction of a new accelerator technology can require a number of years for widespread market penetration.

Increasing application of high energy accelerator for sterilization of medical products due to increased cost and shortage of Co-60.

Increasing interest to X-Rays processing.

Major industrial accelerator producers are located in USA, Russia, Japan, France and Belgium. Several other countries including Poland are capable to produce accelerators on limited scale.

The R&D program of accelerator technology perfection is tightly connected to progress in development of advanced technology in many branches of technical activity (power components, control systems).

New accelerators constructions can frequently offer better economic and technical characteristics but only long time operation can revile weak points of certain accelerator construction in practical industrial conditions

The progress in accelerator technology is not a quick process but can be easily noticed in longer time scale.

Prospects for Future Expansion

Many beneficial effects of radiation processing have been demonstrated:

- The development of polymeric materials with new properties by application different materials.
- Reduction of environmental pollution by degradation toxic compounds in air, water and soil.
- Cracking crude oil to increase the yield of lighter compounds which are the most valuable products.
- Increased sale of irradiated foods to reduce the use of toxic chemicals to control insects, and to reduce the risk of disease.
- Recovery of rare metals, such as scandium from effluents of hot spring by radiation grafted fiber absorbent (radiation grafted fibers for recovery of uranium from sea water).
- Radiation degradation of natural polymers, such as chitosan, starch and carrageenan to produce plant growth promoter and super water absorbent for improving agriculture.

Thank you for your attention