Digital SPAD Scintillation Detector Simulation Flow to Evaluate and Minimize Real-Time Requirements

Marc-André Tétrault, Audrey Corbeil Therrien, William Lemaire,
Réjean Fontaine, Jean-François Pratte

Pico-Second Workshop, Kansas City, September 2016

UNIVERSITÉ DE SHERBROOKE

IEEE NPSS NUCLEAR & PLASMA SCIENCES SOCIETY

GRAMS

compute canada | calcul canada

Fonds de recherche sur la nature et les technologies Québec

Financed in part by NSERC CRSNG

RESMIQ Regroupement Stratégique en Microsystèmes du Québec

CIMS Centre d'imagerie moléculaire de Sherbrooke

Outline

- Overview for PET and time of flight PET
  - Basic PET principles and why time-of-flight matters
  - Review detector chain towards time of flight
- Precise timing resolution detector design
  - Photodetector
  - DAQ
  - Compromises for real-time embedded microsystem

Positron Emission Tomography

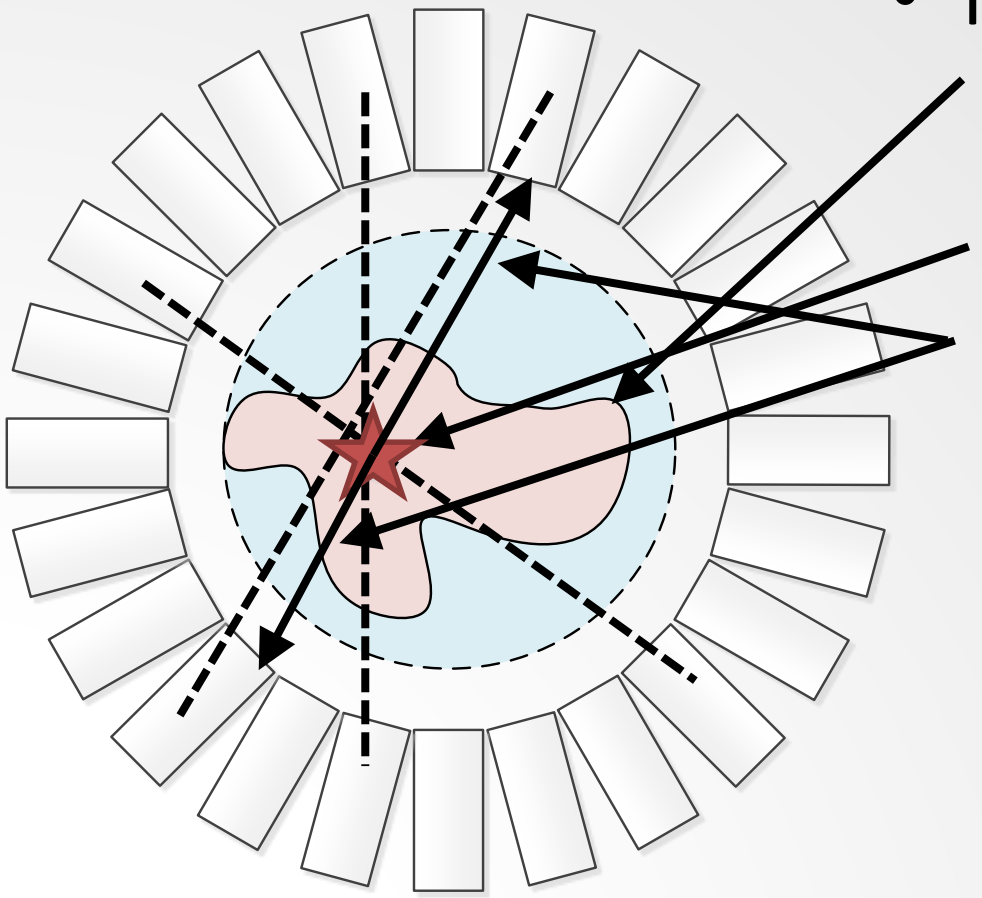

- Molecular Imaging Modality
  - Tracer distribution (positron emitter)
    - Hot spot on the left side
  - Positron Annihilation
  - Collinear 511 keV particles
  - Line of response

Image Quality Figures of Merit

- Contrast to Noise Ratio from detector's
  - Spatial resolution
  - Energy resolution
  - Timing resolution
- Sensitivity or Noise Equivalent Counts
  - Detector dead time
  - Optimized with real-time processing

Image improvement avenue

- Spatial resolution limit is positron range
  - About 0.5 mm for mainstream tracers
- Improve contrast with time of flight

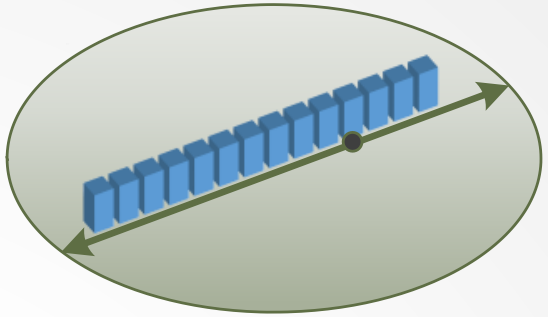

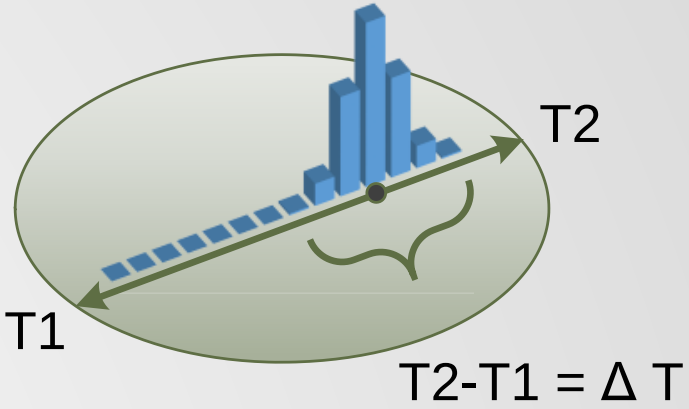

- 1.5 mm on the LOR needs 10 ps FWHM in coincidence
- Real time image reconstruction (no iterative engine required)

Sensitivity Improvement with TOF

Excerpt from Lecomte, "Evolution of Data Acquisition and Processing in Medical Imaging with Radiation“, Real Time Conference 2016

$$SNR \propto \sqrt{\text{Nb Events}} \sim \sqrt{\text{Sensitivity}}$$

$$\frac{SNR_{ToF}}{SNR_{PET}} = \left(\frac{\Delta x^2}{D^2}\right)^{-1/4} = \sqrt{\frac{D}{\Delta x}}$$

$$\boxed{G = \frac{D}{\Delta x} = \frac{2D}{c\Delta t} \approx \frac{\text{Object Dimension}}{\text{ToF Precision}}}$$

40 cm Object
Δt = 600 ps

$$\frac{SNR_{ToF}}{SNR_{PET}} = \sqrt{\frac{40\text{ cm}}{9\text{ cm}}} = 2.1 \quad \Rightarrow \quad G = 4.4$$

4 cm Object
Δt = 60 ps

$$\frac{SNR_{ToF}}{SNR_{PET}} = \sqrt{\frac{4\text{ cm}}{0.9\text{ cm}}} = 2.1 \quad \Rightarrow \quad G = 4.4$$

Budinger TF. Time-of-Flight Positron Emission Tomography: Status Relative to Conventional PET. *J Nucl Med* 24(1):73-78, 1983.

Crystal-based detectors flow chart

- Scintillator-based detectors

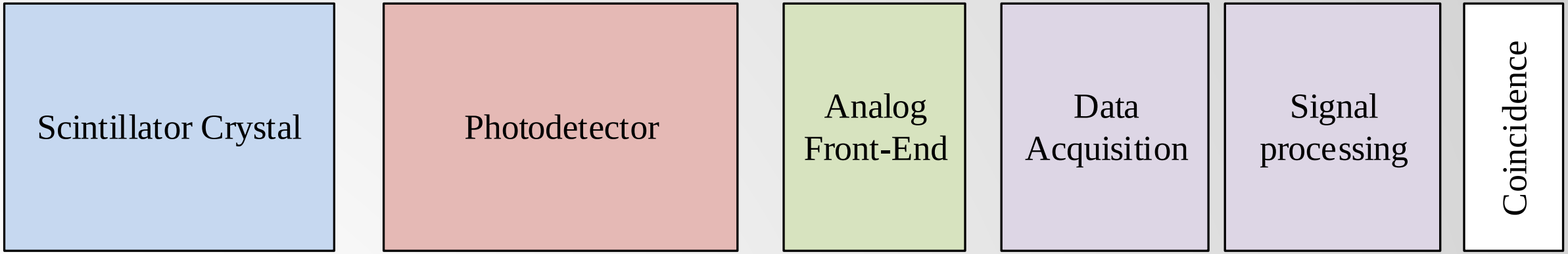

Scintillation brief overview

Scintillator Crystal | Photodetector | Analog Front-End | Data Acquisition | Signal processing

- Factors affecting timing[1,2]
  - Light yield
  - T_{rise}, T_{decay}
  - Crystal size/length
- Fast TOF Scintillators[3]
  - LSO, LuAG, LuAP, $LaBr_3$
- With an ideal photodetector the 1st photon has best timing[1]
  - LSO 1st photon has theoretically ~35 ps FWHM in coincidence

Weber et al, NIM 2004; Mikhailin et al, NIM 2002

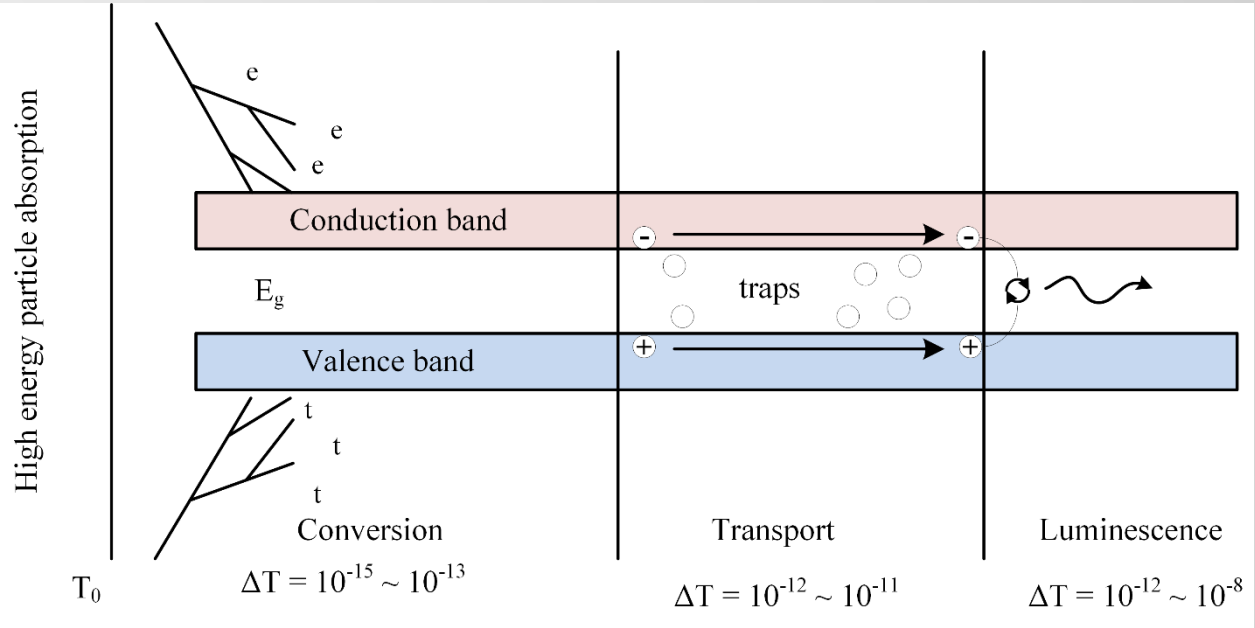

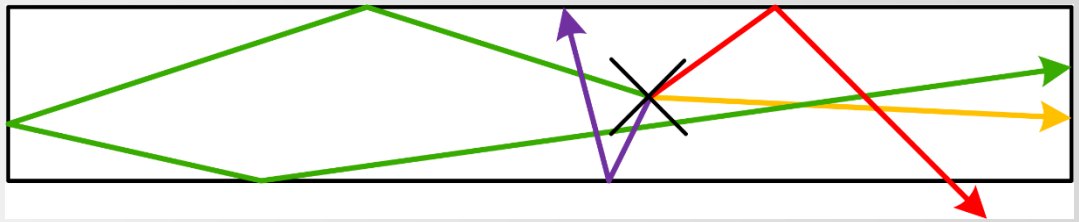

1- Derenzo et al, PMB 2014
2- Gundacker et al, NIM 2016
3- Conti et al, TNS 2009

Photodetectors

Scintillator Crystal | **Photodetector** | Analog Front-End | Data Acquisition | Signal processing

- PMT
  - ☺ High gain, fast timing
  - 😐 block detector, many pixels, medium count rate
  - ☹ Bulky, sensitive to magnetic fields
- APD
  - ☺ High PDE, immune to magnetic fields
  - ☺ Pixelated detector, high count rate
  - ☹ noisy, limited gain, average timing
- SiPM (Geiger-mode APD, MPPC)
  - Array of Single Photon Avalanche Diodes (SPAD)
  - ☺ High gain, very fast timing
  - ☺ Single photon sensitivity
  - ☺ Pixelated, high count rate, immune to magnetic fields

www.fireflysci.com

> 10 mm

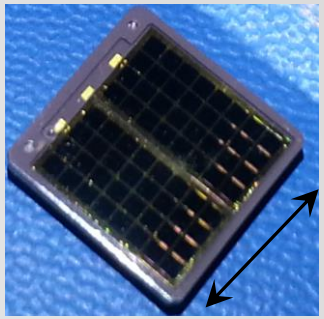

8 x 8 array

10 mm

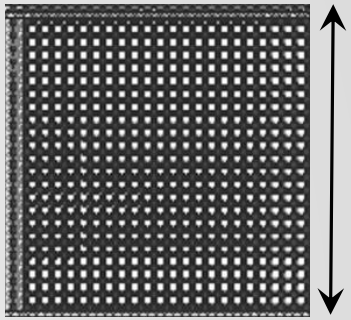

1 mm

Timing performance

Scintillator Crystal | Photodetector | Analog Front-End | Data Acquisition | Signal processing

- Where are we?
  - Experimental measurements with LYSO

	Systems	Table setups
PMT	473 ps FWHM (1)	234±20 ps rms (5)
APD	6.6 ns FWHM (2)	1.9 ns FWHM (6)
Analog SiPM	385 ps FWHM (3)	85±4 ps FWHM (7)
Digital SiPM Frach et al, 2009	212 ps FWHM (4)	177 ps FWHM, (8)
		120 ps FWHM, (9)

1- Wong et al, TNS 2015
2- Bergeron et al, TNS 2009
3- Levin et al, TMI 2016
4- Degenhardt et al, NSS-MIC 2012
5- Peng et al, TNS 2013
6- Leroux et al, TNS 2009
7- Nemallapudi et al, PMB 2015
8- Somlai-Schweiger et al, J. Inst. 2015
9- van Dam et al, PMB 2013

Analog Front End

Scintillator Crystal | Photodetector | Analog Front-End | Data Acquisition | Signal processing

- Analog front-end
  - Adapted to photodetector
  - Typically fast and low-noise preamplifiers
    - Anghinolfi et al, TNS 2004
    - Olcott et al, TNS 2005
    - Callier et al, NSS-MIC 2009
    - Powolni et al, TNS 2011
    - De Medeiros Silva et al, TCS 2014
    - … and many more

DAQ systems

- Real Time Data Acquisition
  - Pulse systems : Lecomte et al, TNS 1990, Young et al, NSS-MIC 1999
  - Modern digital systems :
    - Free running ADC : Streun et al, NIM 2002, Fontaine et al, NSS-MIC 2004
    - Hybrid ADC and TDC : Wang et al, Real Time 2009
- Going forward, the key DAQ component for timing
  - Time to Digital Converters (Henzler, S., Springer, 2010)
    - Low power with 45 ps resolution → Perenzoni et al, Elec. Lett. 2015

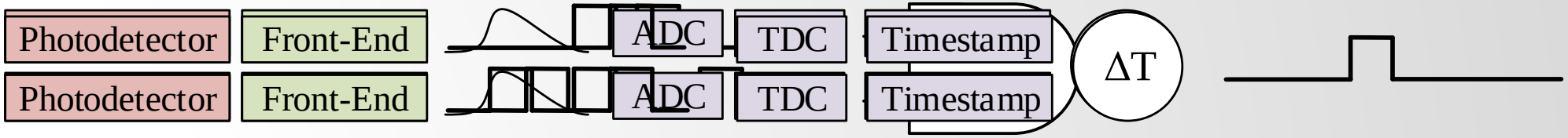

Towards 10 ps time of flight

Scintillator Crystal | Photodetector | Analog Front-End | Data Acquisition | Signal processing

- 1.5 mm on the LOR needs 10 ps FWHM in coincidence
  - Scint : High light yield, fast rise and decay times
  - Opto : High photodetection efficiency
  - DAQ : Single-shot timing with ps resolution and low jitter → $\sigma(t)$
  - DSP : Individual photon distinction would enable better signal processing

- Excellent measurements with SiPM photodetector
  - Why?

SiPM principles

- With non-ideal detector, first few photons have best timing information
  - SiPM can see that!

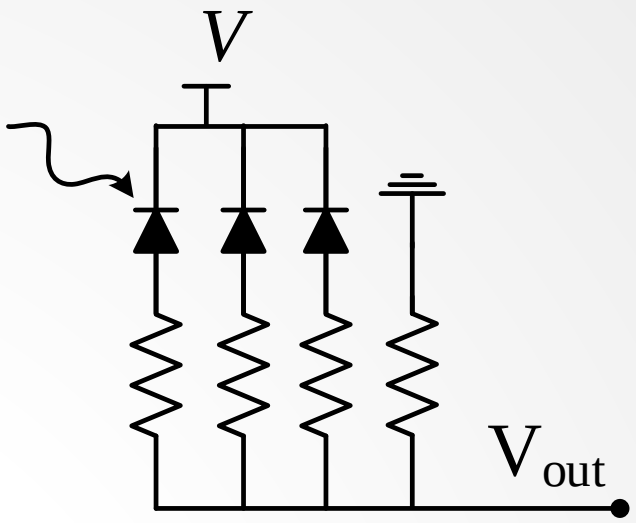

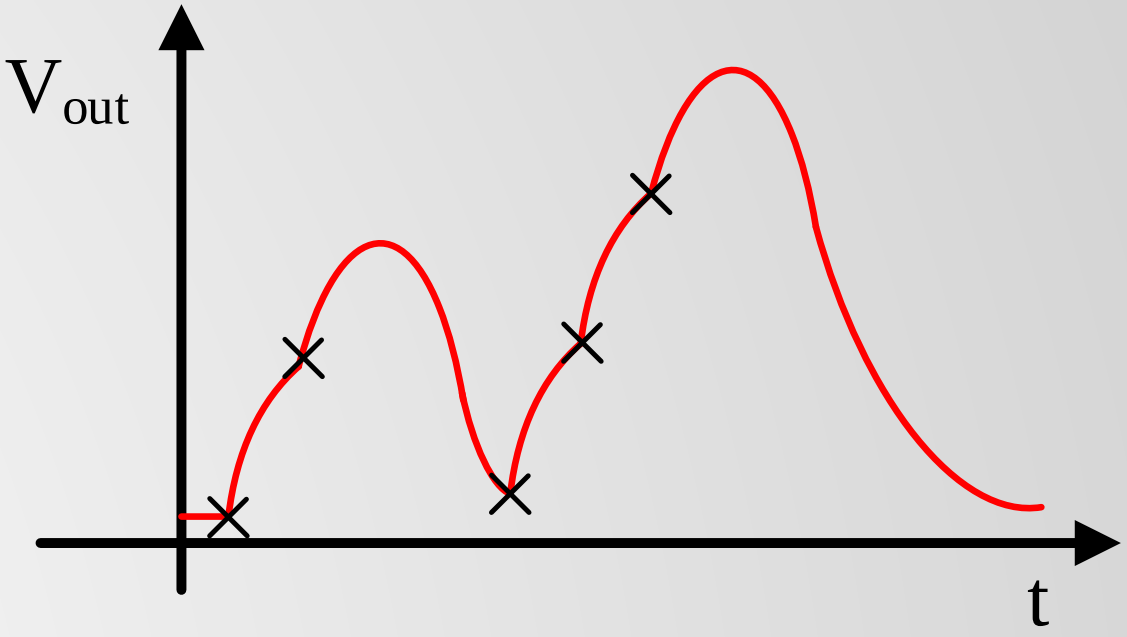

- Detection efficiency ∝ Bias
- Noise ∝ Bias

Analog vs Digital SiPM

Scintillator Crystal | **Photodetector** | Analog Front-End | Data Acquisition | Signal processing

Passive quench SiPM

- Very simple
- Variable cell response

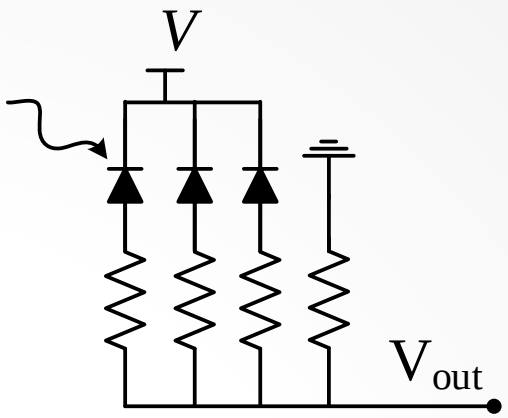

Generic devices,
many companies

Active quench SiPM

- Noise suppression
- Temp. invariant signal
- Uniform cell response

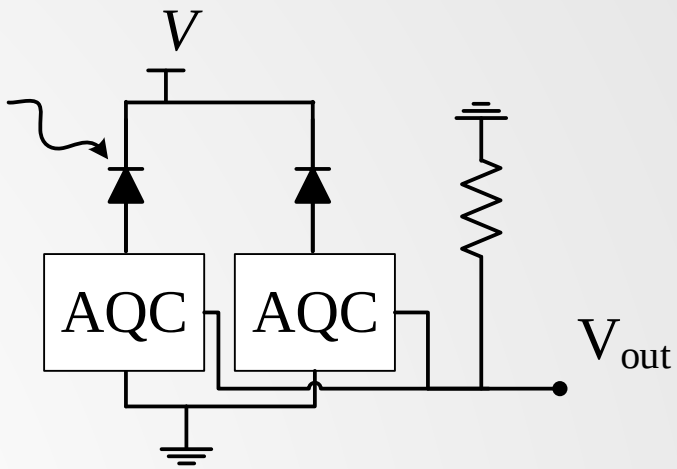

Nolet et al, NSS-MIC 2014

Digital SiPM

- No external analog front-end

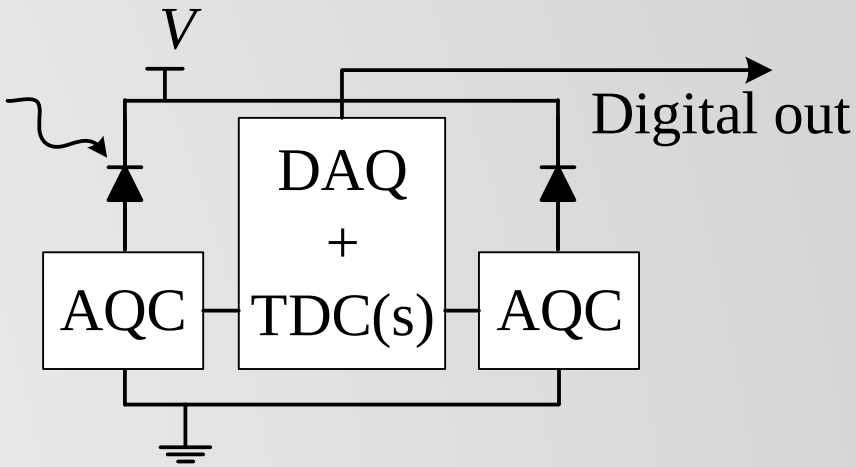

For PET: Frach et al, 2009
Braga et al, 2014

Optical Fill Factor

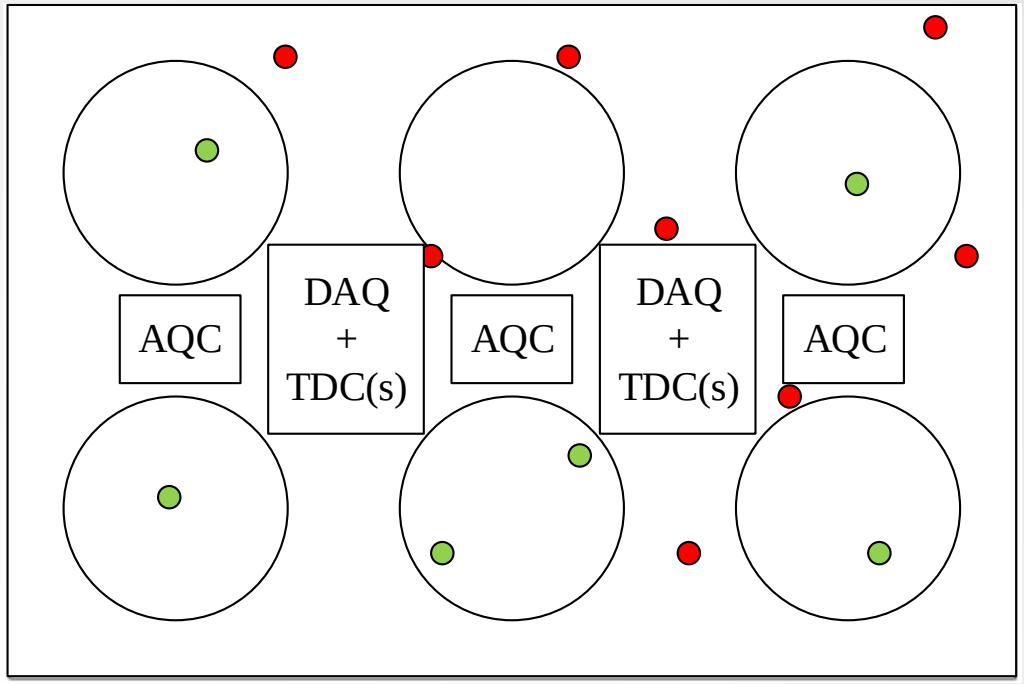

35% fill factor

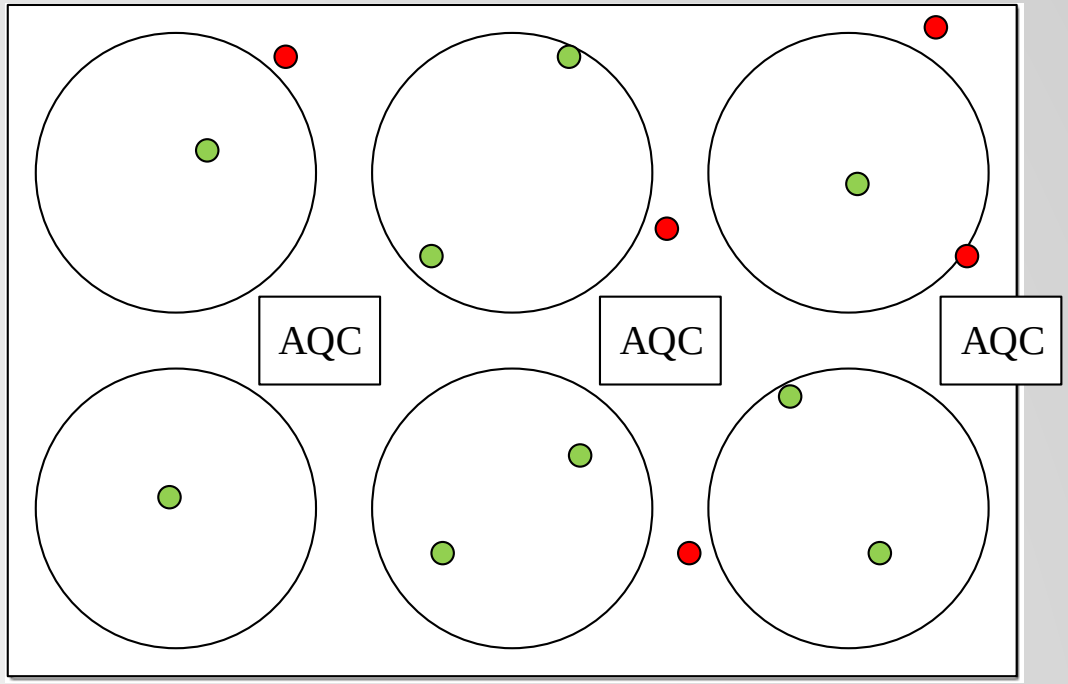

53% fill factor

- Detection efficiency ∝ Optical Fill Factor
- Analog or digital ? Same timing with same SPAD arrays for LYSO
  - Gundacker et al, NIM 2015

Vertical Integration for Digital SiPM

- Back-side illumination
  - Infra-red wavelengths
  - Zou, Bronzi, 2014, SOI on CMOS
  - Pavia et al, JSSC 2015, Dual-CMOS

- Front-side illumination
  - Tétrault et al, TNS 2015
    - Test chip in assembly
    - Prelim results at NSS-MIC 2016

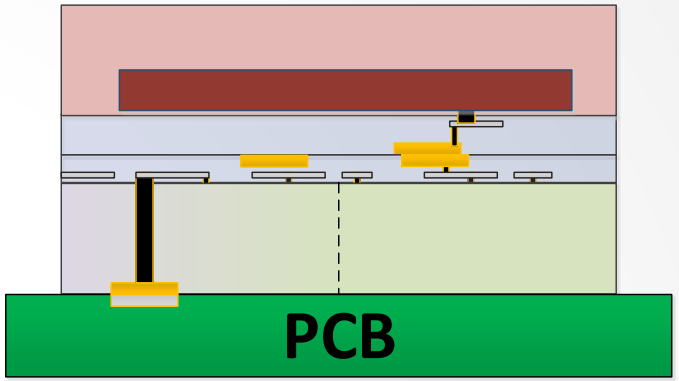

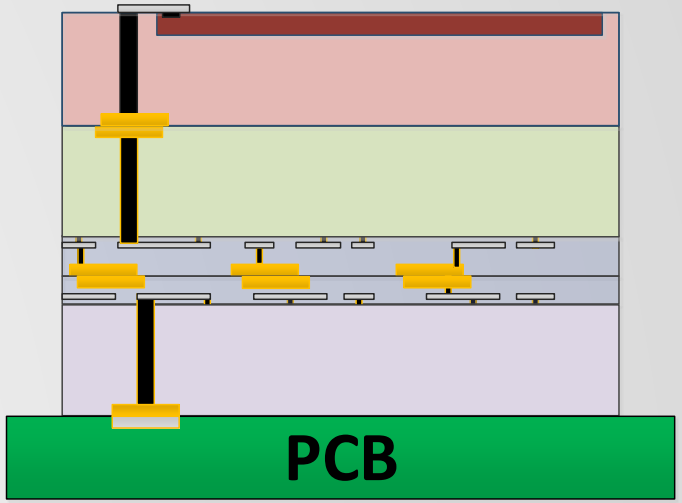

Digital SiPM microsystem design

- Implementation boundaries
  - 1 TDC per scintillator
    - First observed photon to reach TDC
    - No post-processing required, excellent real-time performance
  - 1 TDC per cell (400 cells per mm^2)
    - Maximum Likelihood Estimator (MLE)
      - Gundacker et al, 2013, van Dam et al, 2013, Venialgo et al, 2015
- Is there a middle point providing the best of both worlds?

Digital SiPM Microsystem Model

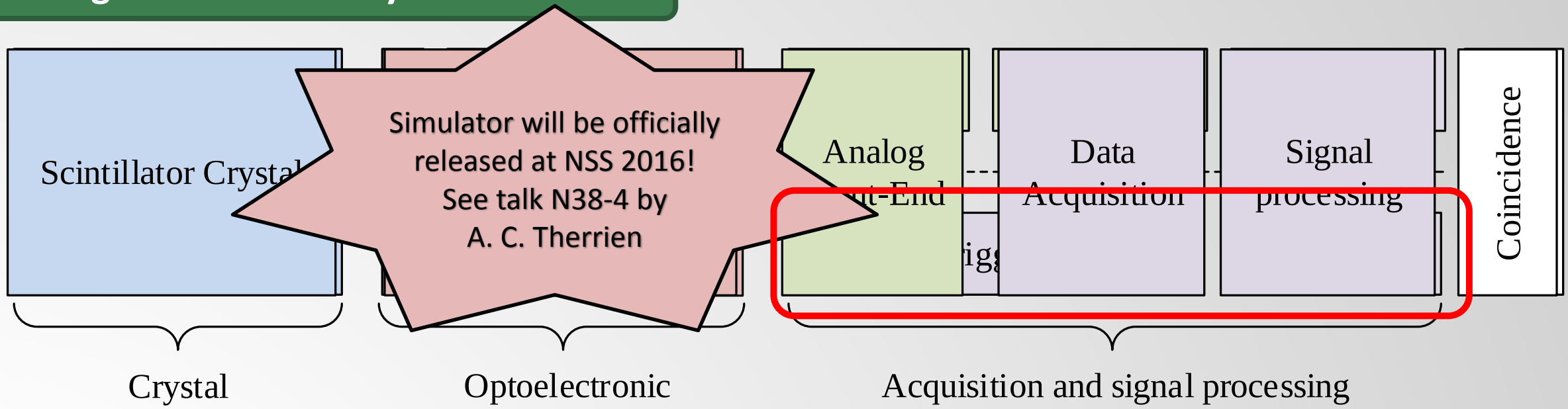

Simulator will be officially released at NSS 2016! See talk N38-4 by A. C. Therrien

Photon Statistics	Fill factor	Skew and jitter for	TDC LSB	Single TDC
Light Transmission	Quantum efficiency		TDC Jitter	Multi-TDC + MLE
Efficiency	Avalanche probability	-Clock tree	TDC Sharing	
	Noise not considered	-Trigger tree		
	QC dead time			
Geant4 toolkit	QC jitter			
Special thanks to				
Marco Pizzichemi	Therrien et al, TNS 2014	*This work, Python models		

Simulation parameters

LYSO

- 40 000 / MeV
- 1.1 x 1.1 x 3 mm^3
- T_{rise} = 70 ps
- T_{decay} = 40 ns

SPAD array

- Effective PDE = 18% @ 420 nm
- 1.1 x 1.1 mm^2
- 484 cells, 50 micron pitch
- Dalsa CMOS HV doping profile
- 20 ns quench/recharge dead time

TDC

- Programmable precision
- Programmable resolution
- Programmable SPAD:TDC ratio

Many parameters to consider, needs deep knowledge of entire detector to fully configure

Simulation Outcomes (LYSO)

- What is the coincidence timing resolution (CTR) lower limit?
- What is the performance gain between one and many TDCs?
- How many TDCs are actually needed?
  - Will determine real-time load and silicon real-estate for TDCs
  - Faster real time → lower dead time → better sensitivity
- Subset of full simulation results

$\sigma(t)_{Cell}^2 = \sigma(t)_{SPTR}^2 + \sigma(t)_{QRC}^2$

$\sigma(t)_{Cell}$ = 30 ps FWHM

$\sigma(t)_{TDC}$ = 30 ps FWHM or variable

TDC resolution : 1 to 50 ps LSB

Figure of merit : coincidence timing resolution (CTR)

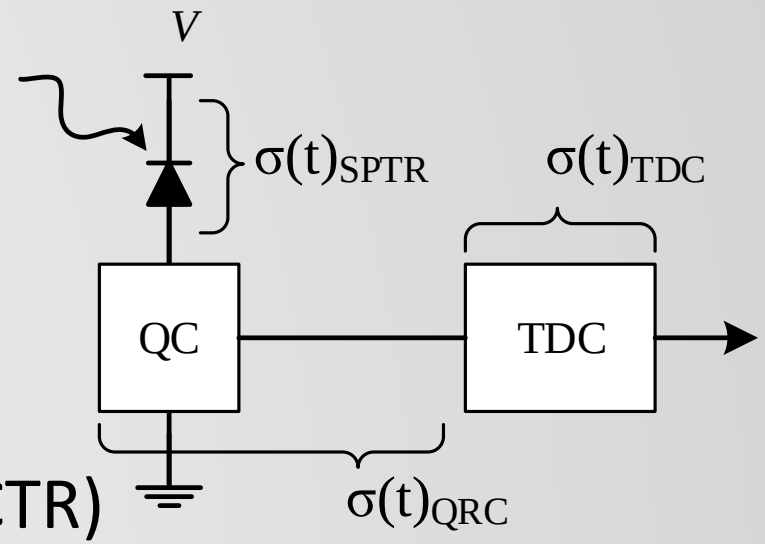

Full TDC array LYSO results

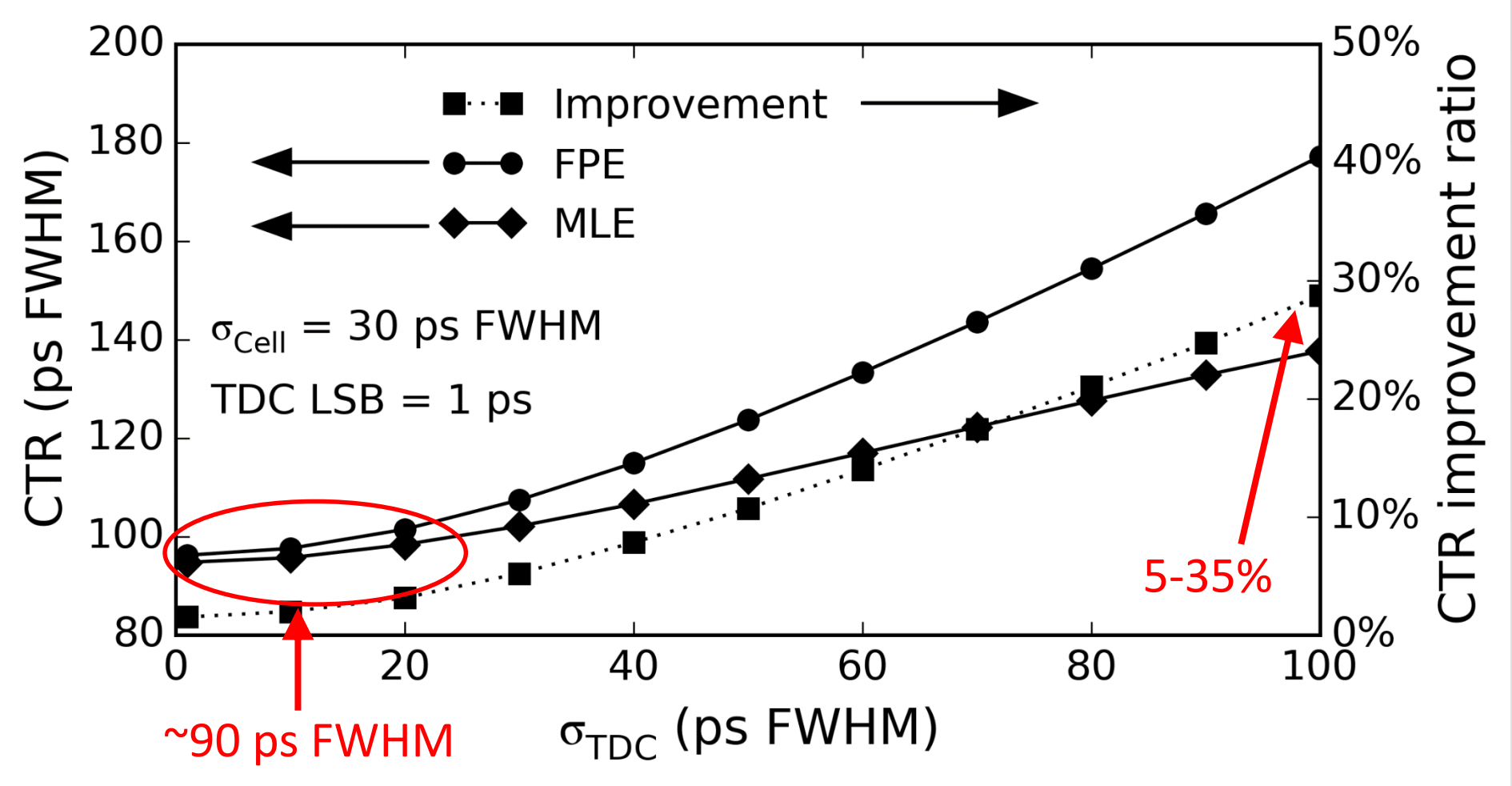

1- Lower limit
2- Multi-TS improvement

Impact of sharing TDC LYSO

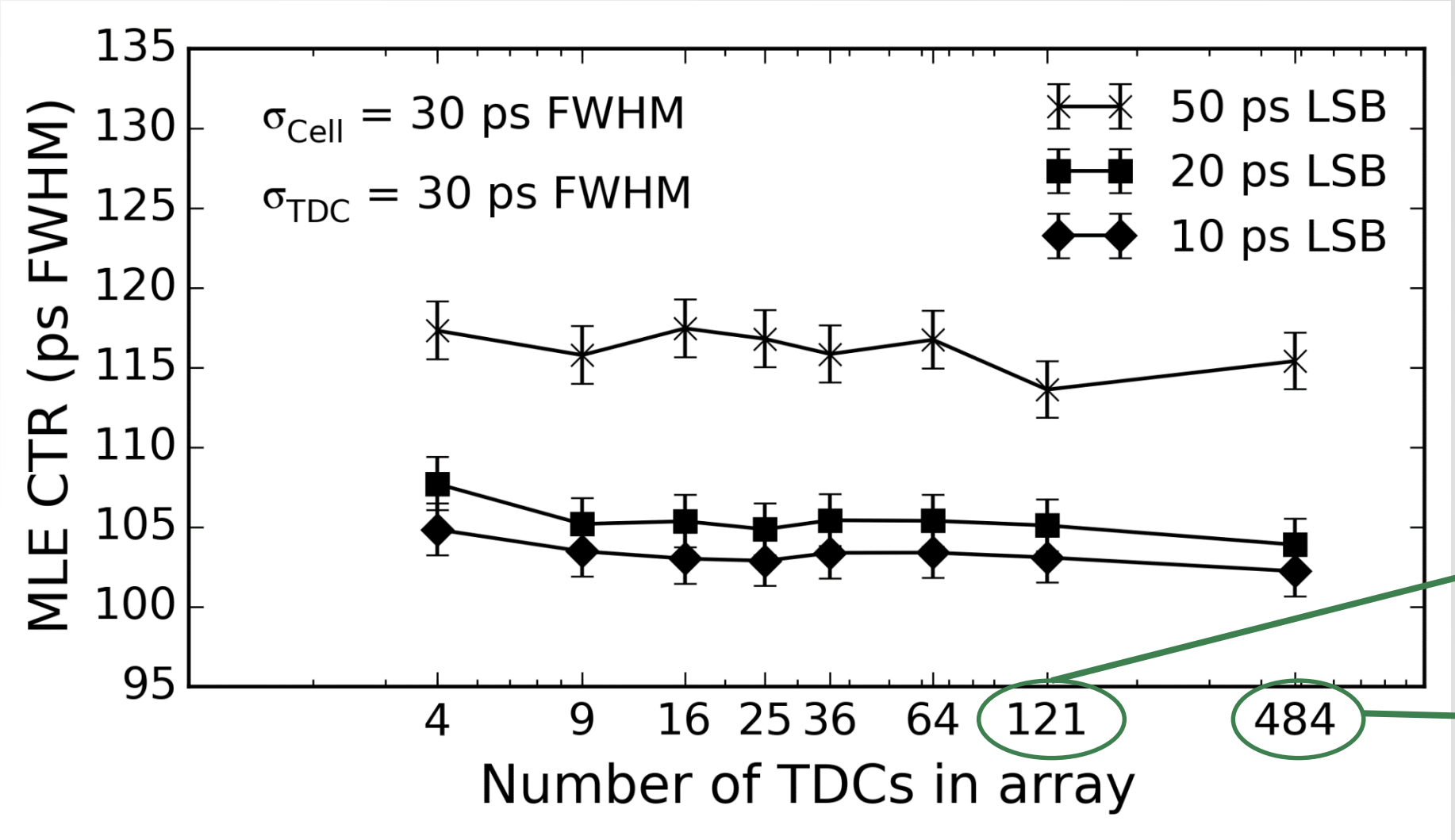

How many TDC?

1:4 Ratio

1:1 Ratio

$LaBr_3$

- Substituted LYSO parameters for
  - Absorption
  - Refraction Index
  - Wavelength emission
  - Light yield = 60 000 / MeV
  - Rise time = 150 ps
  - Decay time = 15 ns

H. T. van Dam, S. Seifert et al, "Optical Absorption Length, Scattering Length, and Refractive Index of $LaBr_3$:Ce^{3+}", IEEE TNS, vol 59, no 3, 2012

J. Glodo, W. W. Moses et al., "Effects of Ce concentration on scintillation properties of LaBr3:Ce“, IEEE TNS, vol. 52, no. 5, 2005

Full TDC array LaBr3 results

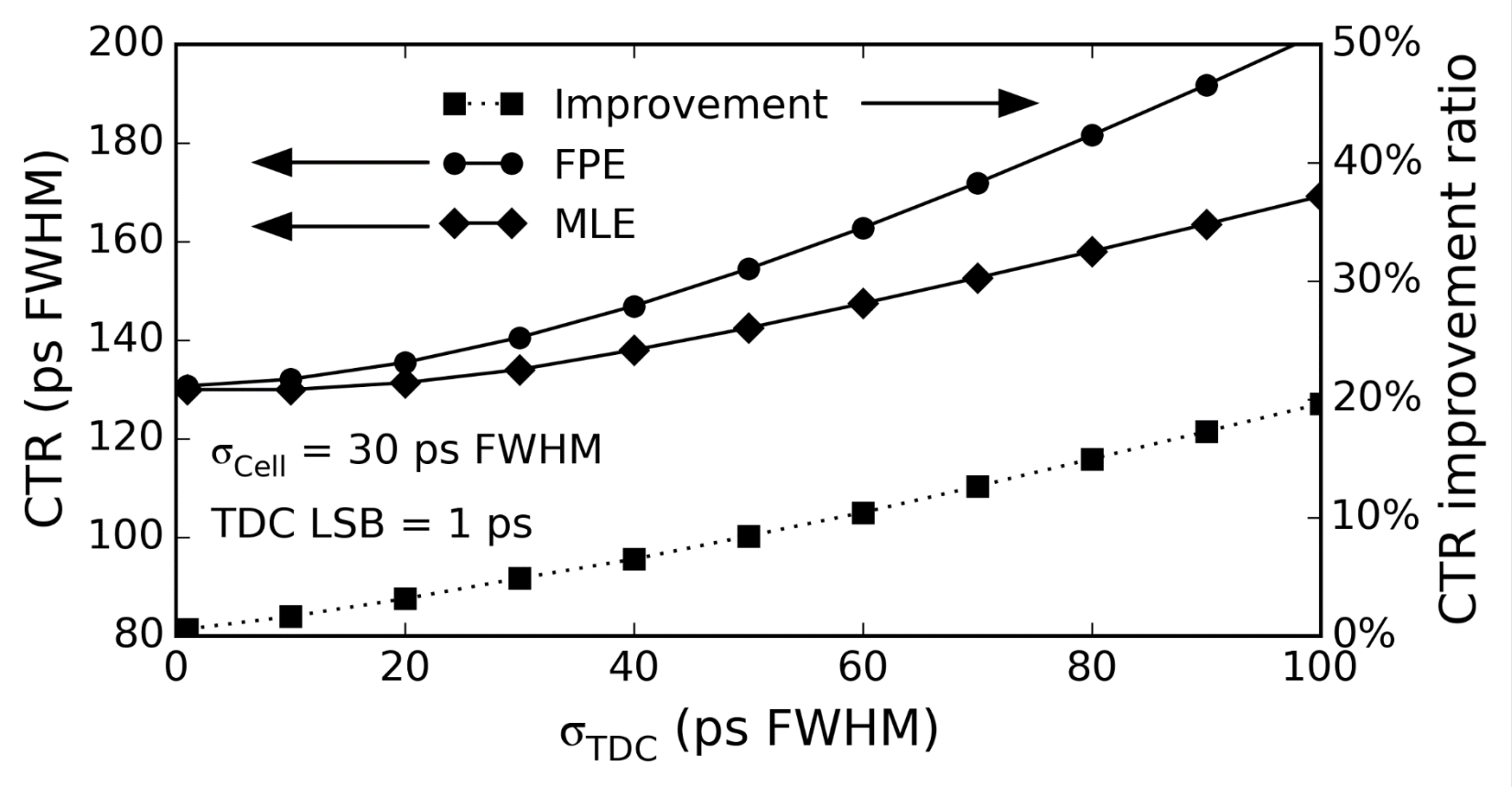

- Geant4 model needs a review
- Should change SPAD profile for lower wavelength

How to reach 10 ps?

- 10 ps beyond current scintillator limit
- Crystal designers have ideas
  - Improve prompt photon yield
    - Cherenkov
    - Intra-band luminescence
    - Nano crystals
    - Cqwells
      - Lecoq et al, TNS 2016
  - Expected light yield
    - Unknown

Weber et al, NIM 2004; Mikhailin et al, NIM 2002

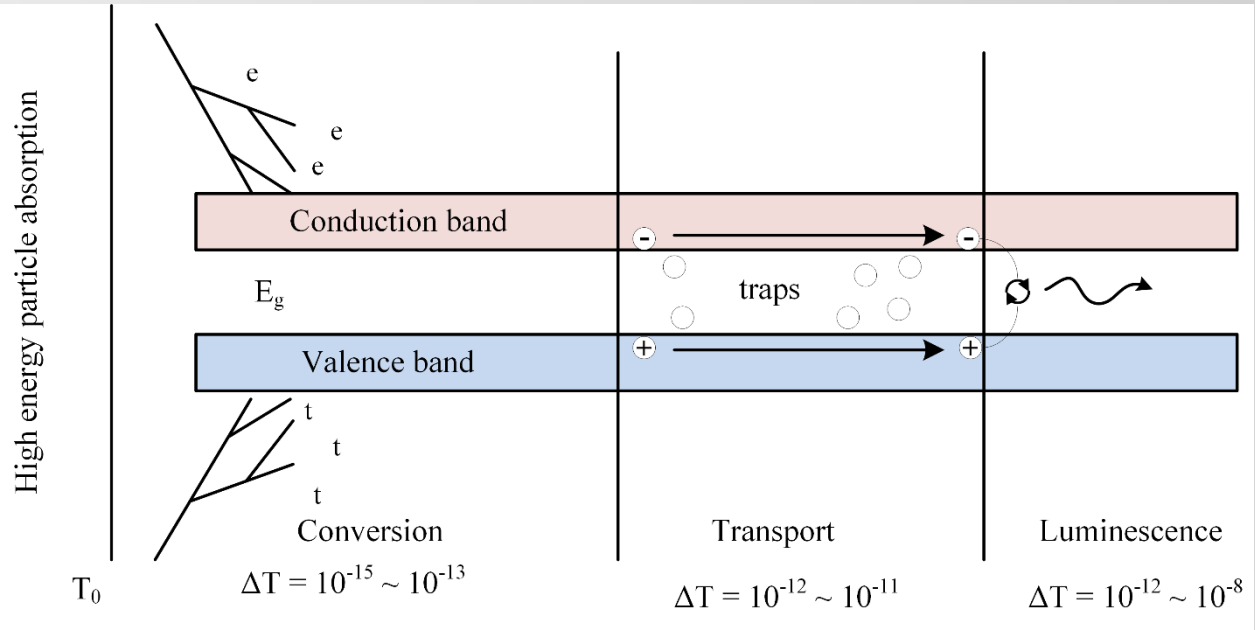

- <u>Observed</u> time-stamped prompts
  - About 25 in photopeak events

Simulation Outcomes (Prompts)

- What is the timing lower limit?
- What is the performance gain between one and many TDCs?
- How many TDCs are actually needed?
  - Will determine real-time load and silicon real-estate for TDCs
  - Faster real time → lower dead time → better sensitivity
- Subset of full simulation results

$$\sigma(t)_{Cell}^2 = \sigma(t)_{SPTR}^2 + \sigma(t)_{QRC}^2$$

$\sigma(t)_{Cell}$ = 15 ps FWHM

$\sigma(t)_{TDC}$ = 10 ps FWHM or variable

TDC resolution : 1 to 5 ps LSB

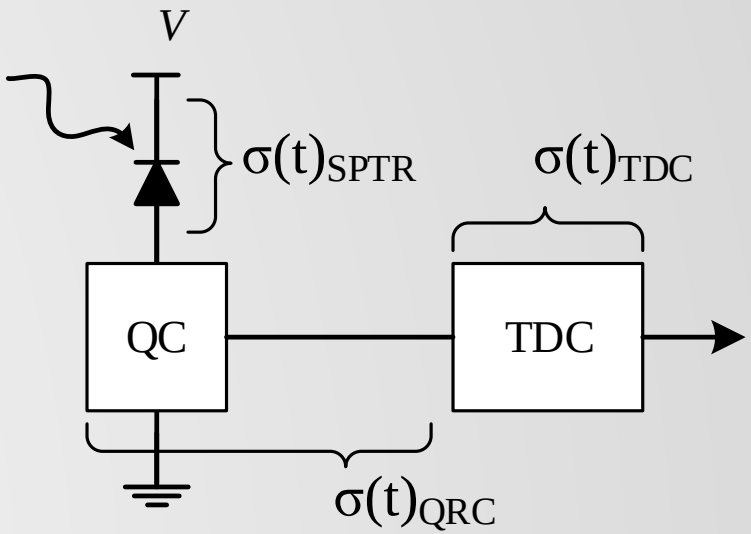

Full TDC array Prompts results

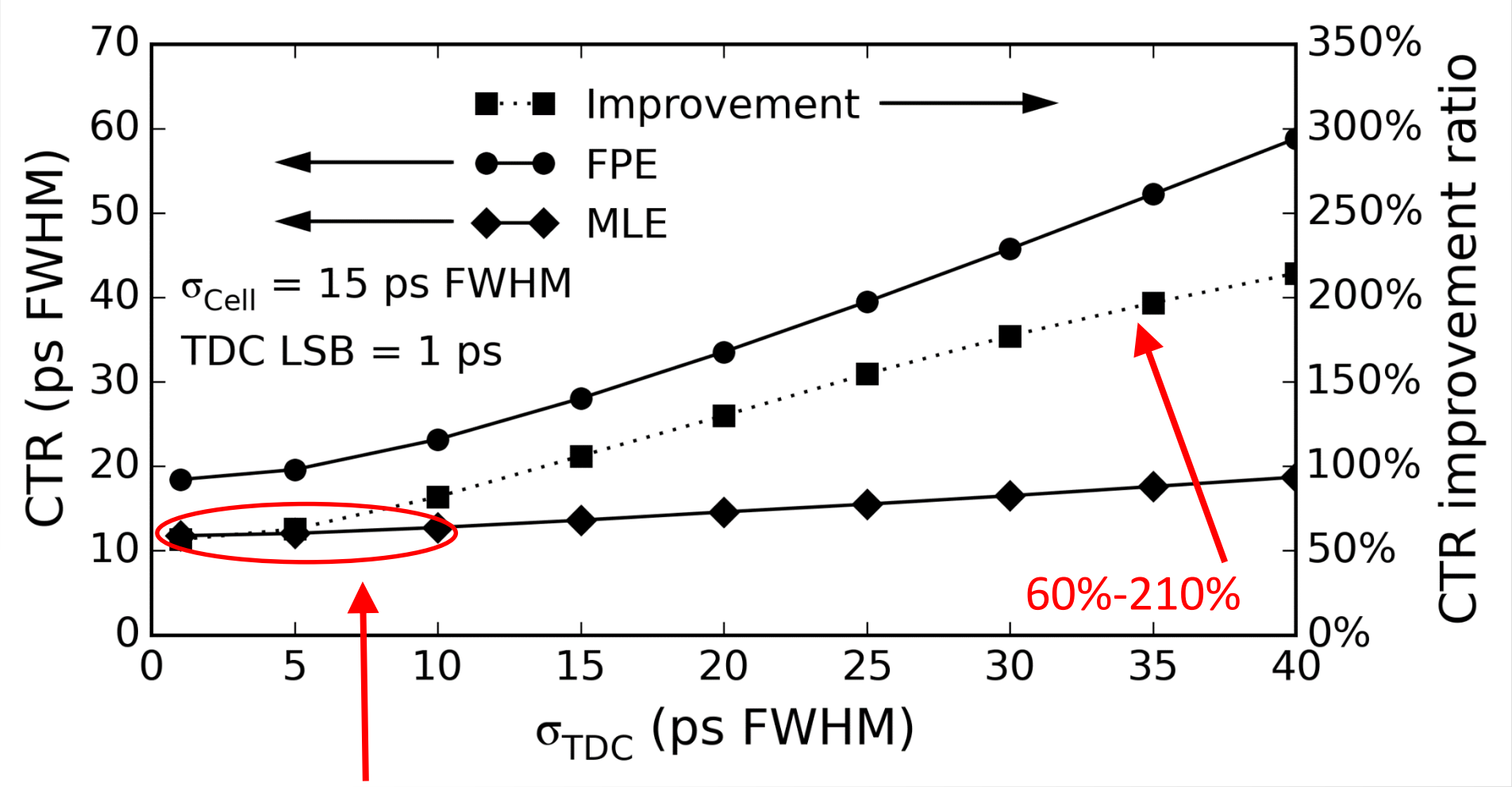

1- Lower limit
2- Multi-TS improvement

Shared TDC Prompts Results

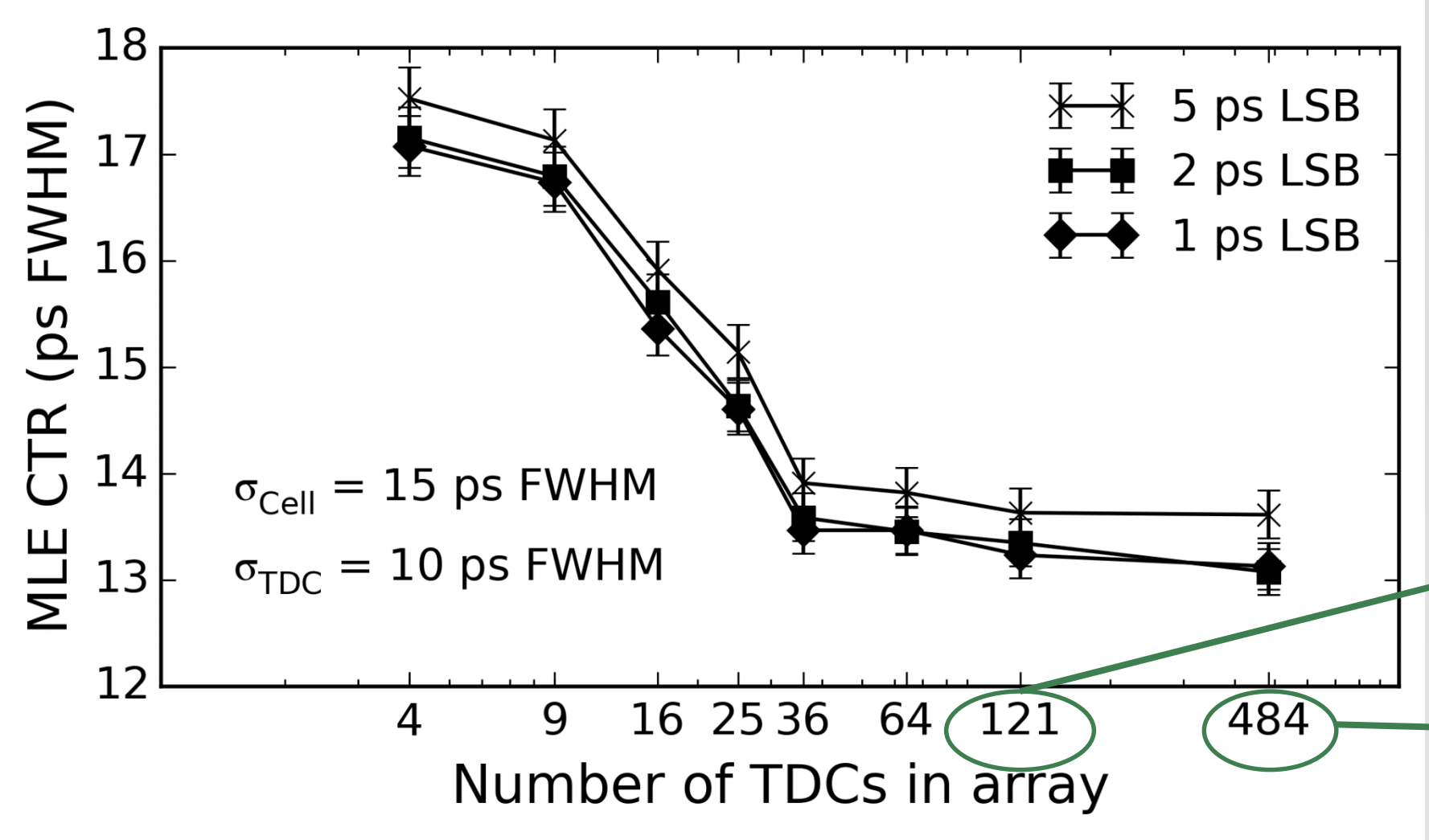

How many TDC?

1:4 Ratio

1:1 Ratio

Outcomes

Current Scintillators

- Not likely to reach 10 ps FWHM CTR
- Moderate gain from multi-TDC MLE
  - Need only a few TDCs to be effective
- Use real-estate to embed other real time tasks
  - MLE calculation
  - Energy discrimination
  - Crystal identification

Future Detector Crystals

- Can theoretically reach 10 ps FWHM CTR
- Good gain from multi-TDC MLE
  - Needs several TDCs for optimal timing
- Compromise between embedded real time features and number of TDCs
  - Simulation flow can guide designers

Where are we?

- Latest Sherbrooke TDC prototype in in 65 nm CMOS
  - Vernier ring approach
  - Better than 10 ps FWHM jitter / 10 ps LSB
  - Less than 40 x 40 um^2
  - Low power
  - Preliminary results presented at NSS-MIC 2016
    - SP2-4, J-F Pratte, "3D Digital SiPM for Precise Single Photon Timing Resolution"

Conclusion

- To reach 10 ps timing resolution
  - Crystal light output is a major player
  - Jitter and precision are important, but not sufficient
  - The number of TDCs per pixel also major player
- The real time microsystem complexity is dependant on the potentially reachable timing resolution
- The simulation tool can help predict the overdesign threshold
  - Reduce un-needed real-time burden
  - Dedicate otherwise redundant real-estate to other real-time tasks