Beam Phase and Intensity Monitor for LHCb

Zbigniew Guzik, IPJ, Warsaw, Poland
Richard Jacobsson, CERN

Acknowledgements:

Eva Calvo Giraldo, AB/BI

Rhodri Jones, AB/BI

Greg Kasprowicz, AB/BI

Thilo Pauly, ATLAS

Motivation 1

- Global clock stability
  - LHCb: 14 km of fibre between SR4 and PA8 at a depth of ~1m
  - Estimated max. diurnal drift 200 ps
  - Estimated max. seasonal drift 8ns

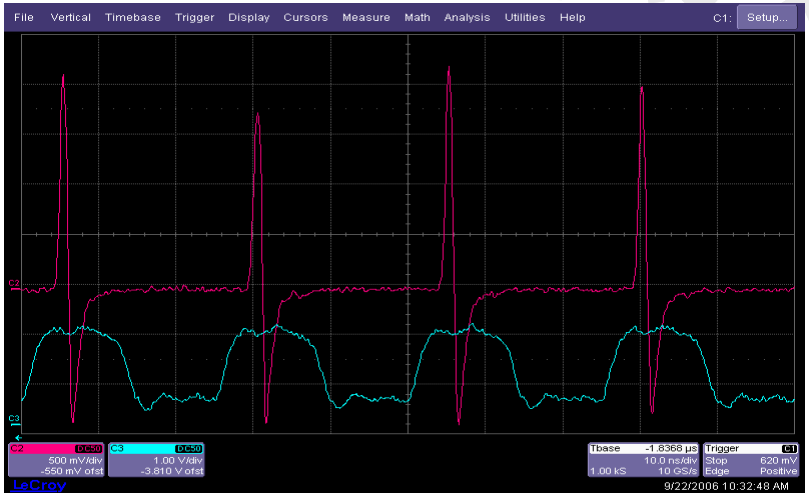

- Aid in the coarse and fine time alignment of the experiment
  - Measure bunch phase bunch-by-bunch

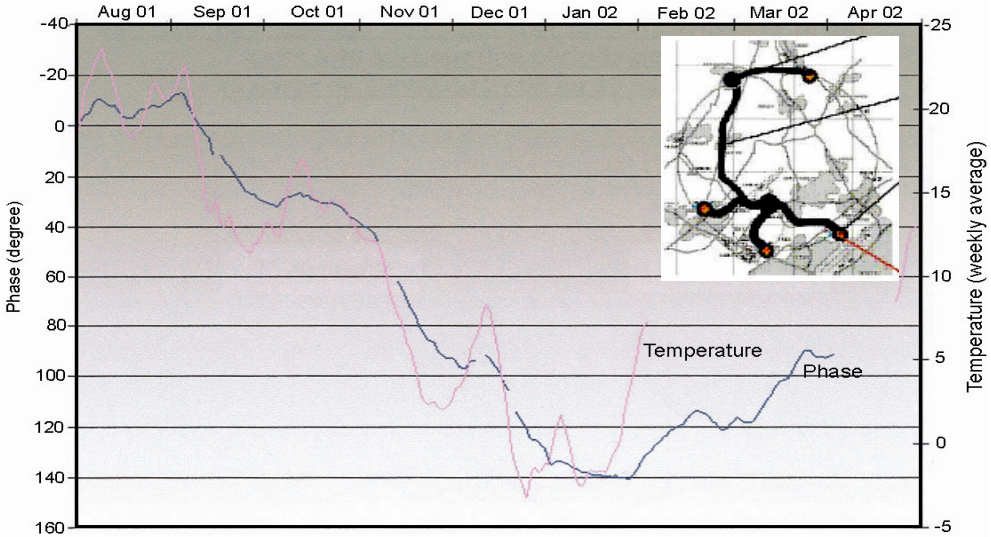

Effect of temperature variations on distribution fibres

(**Source: Asservissement en phase d'une liason fibre optique, rapport de stage, Avril-Juin 2002, Abdelhalim Kelatma (AB/RF))**

Motivation 2

- Monitor individual bunch position
- Bunch structure
  - LHCb off nominal IP with 7.5m
  - See single bunch (-gas) crossings
  - Ghost or displaced bunches (compare LEP)
- Bunch intensity bunch-by-bunch
  - Trigger conditions
  - Check trigger/detector timing alignment
- Interface the measurement directly with the data taking
  - Bunch information in the event data
  - Bunch crossing trigger/gate

Experiment Beam Pick-Ups

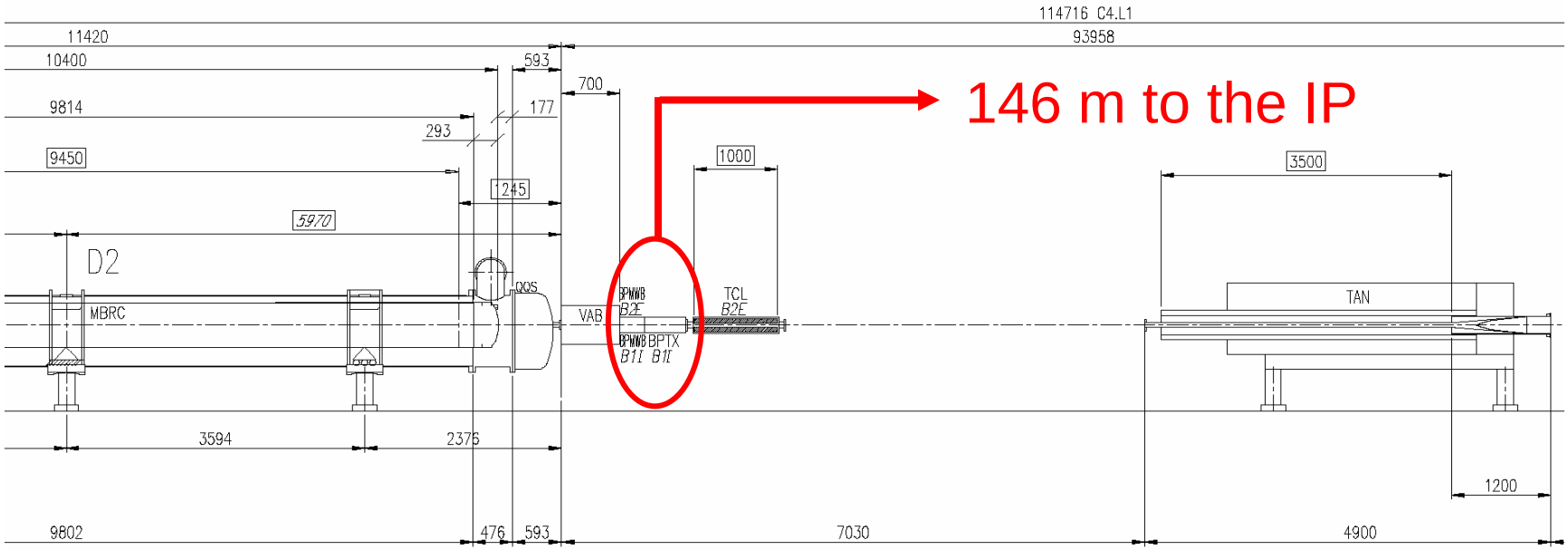

- 1158 Beam Position Monitors (BPMs) in the LHC of the Button Electrode type
  - Two per IP for exclusive use by the experiments
- Located ~146m on either side of the IP on the incoming beam in LHCb

Button Electrodes (BPTX)

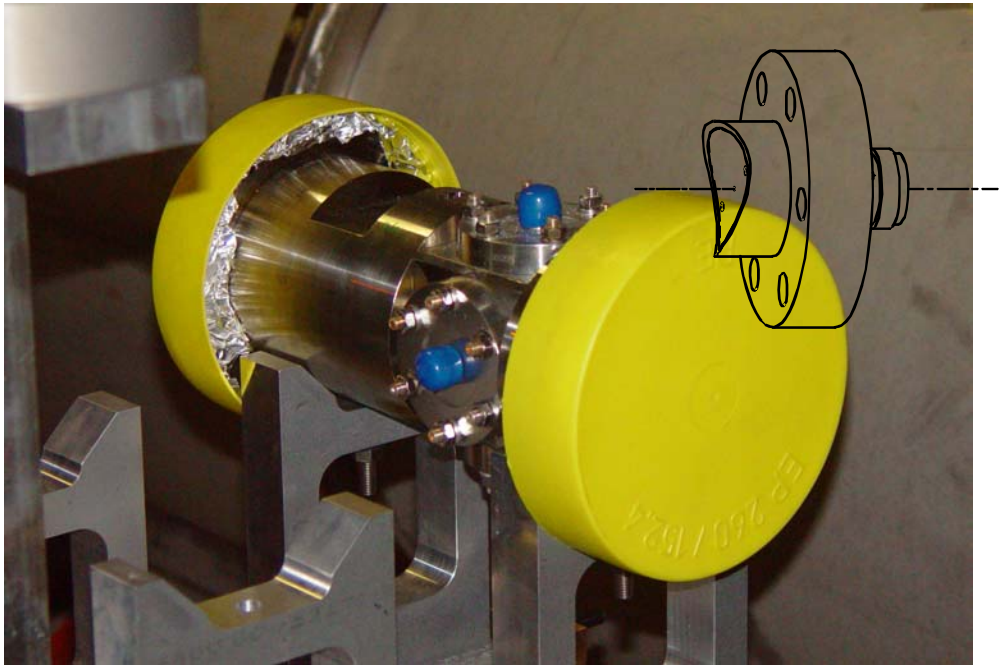

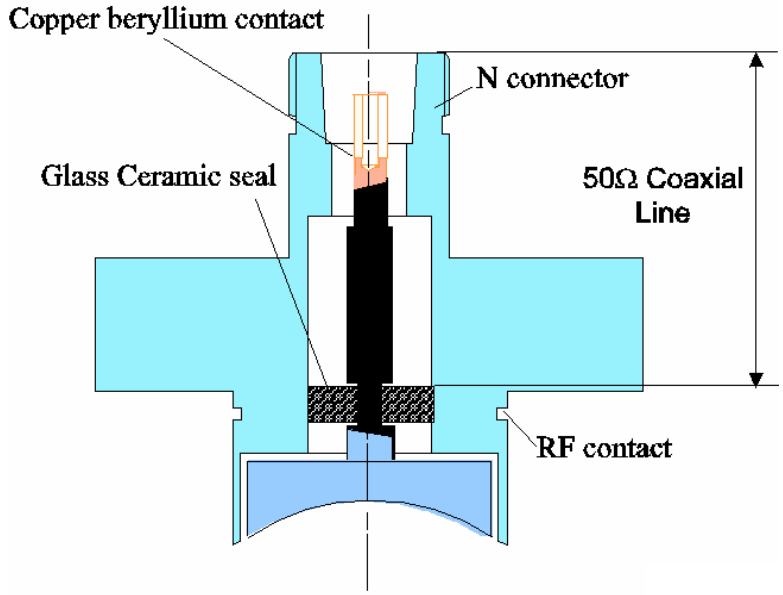

- Sum voltage from all four buttons
  - Signal amplitude ~independent of position

Beam intensity (ppb)	BPTX output [V]	
	450 GeV	7 TeV
Pilot ($5*10^9$)	-1.3 … 2.2	-1.7 … 3.7
Year 1 ($4*10^{10}$)	10 … 18	-14 … 30
Nominal ($1.15*10^{11}$)	-29 … 51	-39 … 85

ΣV_{button}

σ_{beam} (450 GeV) = 375 ps

σ_{beam} (7 TeV) = 250 ps

Signal transmission

- Signal cables installed between BPTXs and the LHCb “LHC rack” in counting houses
  - ½” Nexan CMA50 coaxial cable
  - Approximately 200m (to be measured precisely), 4.2ns/m
  - Attenuation 3.3dB/100m(160 MHz), 5.9dB/100m(450MHz)

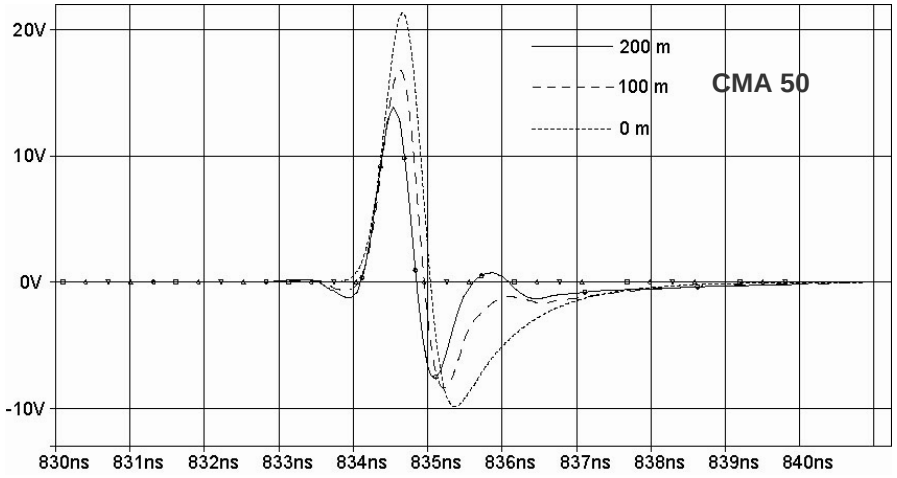

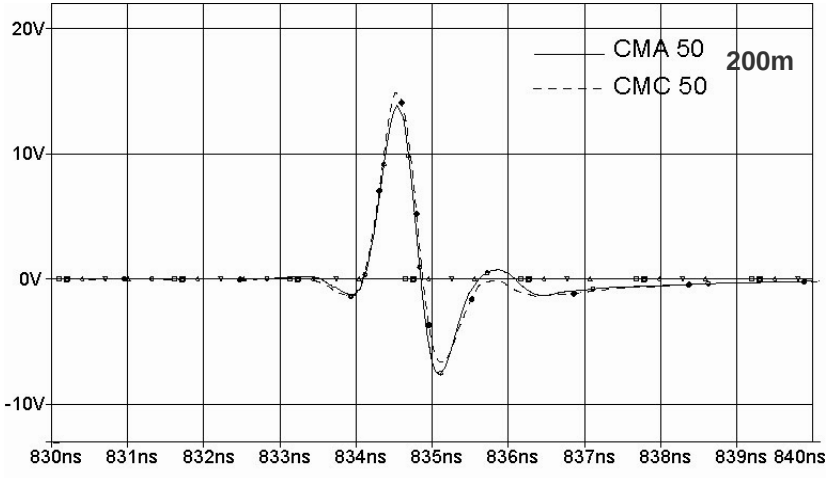

Pulse from single button with nominal beam at 7 TeV

Expected Signal

Beam intensity (ppb)	BPTX output [V]		200 m CMA50 cable [V]	
	450 GeV	7 TeV	450 GeV	7 TeV
Pilot ($5*10^9$)	-1.3 … 2.2	-1.7 … 3.7	-0.6 … 1.2	-1.2 … 2.4
Year 1 ($4*10^{10}$)	10 … 18	-14 … 30	-4.4 … 9.6	-10 … 19
Nominal ($1.15*10^{11}$)	-29 … 51	-39 … 85	-12 … 28	-30 … 55

ΣV_{button}

σ_{beam} (450 GeV) = 375 ps

σ_{beam} (7 TeV) = 250 ps

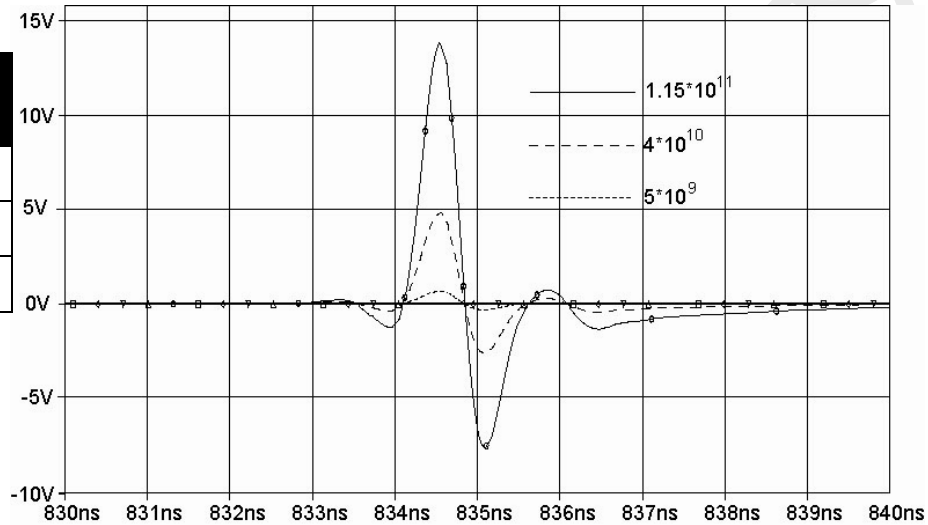

Pulse from single button after 200m with beam at 7 TeV

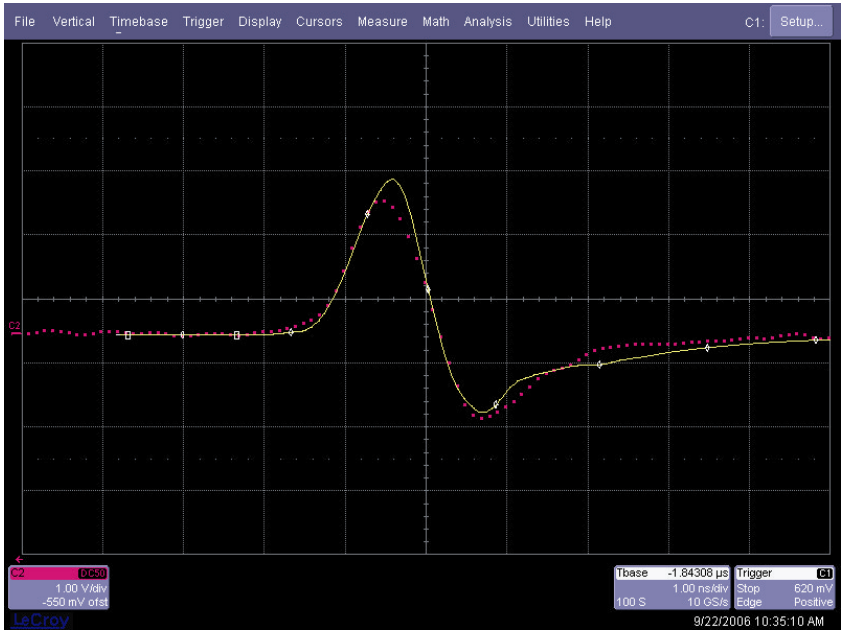

Signal from BPTX on SPS compared to simulation ($4.2*10^{10}$ and 100m cable)

Acquisition Board

- Developing custom made acquisition board
  - Beam Phase and Intensity Monitor (BPIM)
  - 6U VME, one per beam

- Summary of functions:
  - Measure time between bunch arrivals and LHC bunch clock locally
    - Bunch-by-bunch for a full turn filled in FIFO
    - Triggered via controls interface
    - <100 ps precision
  - Measure continuously bunch intensities bunch-by-bunch
    - 12-bit resolution
    - Output intensity on front-panel at 40 MHz (8/4-bit resolution)
    - Triggered via controls interface, fill in FIFO with intensities for full turn
  - Output “bunch crossing trigger” on GP outputs
  - Interfaced directly to LHCb Timing and Fast Control system
    - Bunch information fed into event data
    - May be used in the trigger control
  - Readout via Experiment Control System

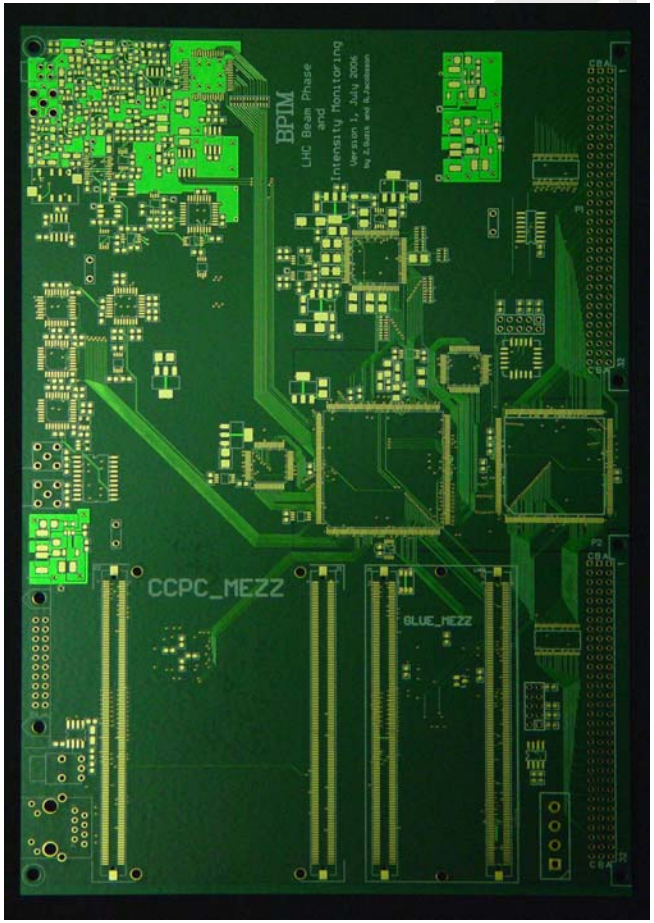

Input stage

- Configurable attenuator to normalize the amplitude range for pilot/nominal(ultimate) beam
  - Two selections using a special RF relay from Omron
  - Output of the attenuator is buffered with an ultra-fast gain device
- Board is driven with the LHC bunch clock and orbit signal
- The phase and the intensity measurement circuits are adjusted with only one programmable delay on the incoming clock which covers entire 25ns range

Intensity Measurement

- Full wave rectifier
- Active integrator circuit
- Differential 12-bit A/D conversion
- Integrator charge reset using an RF MOSFET

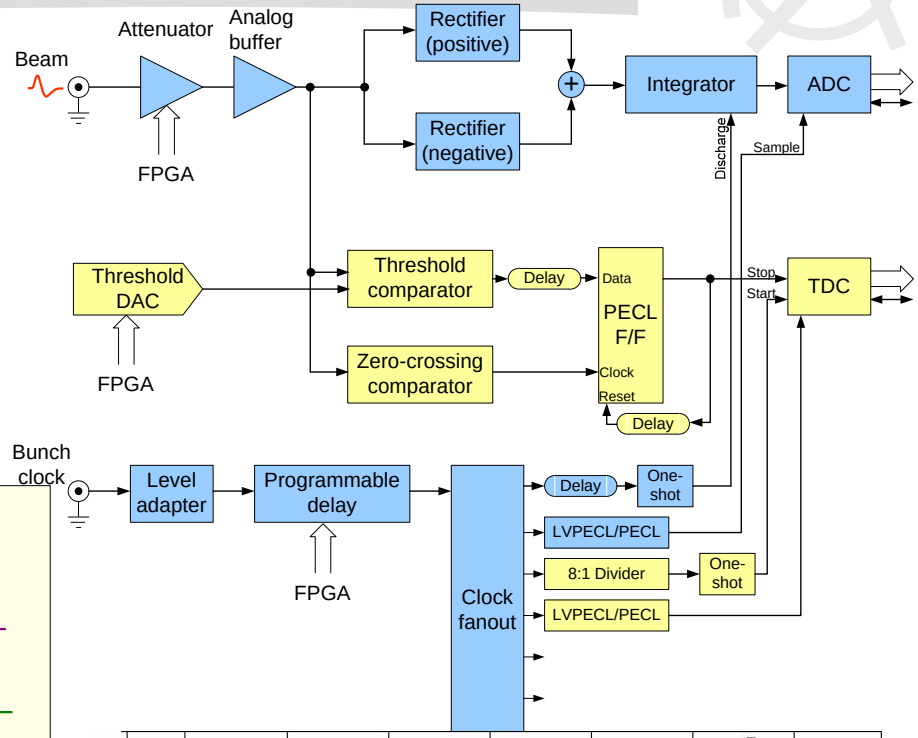

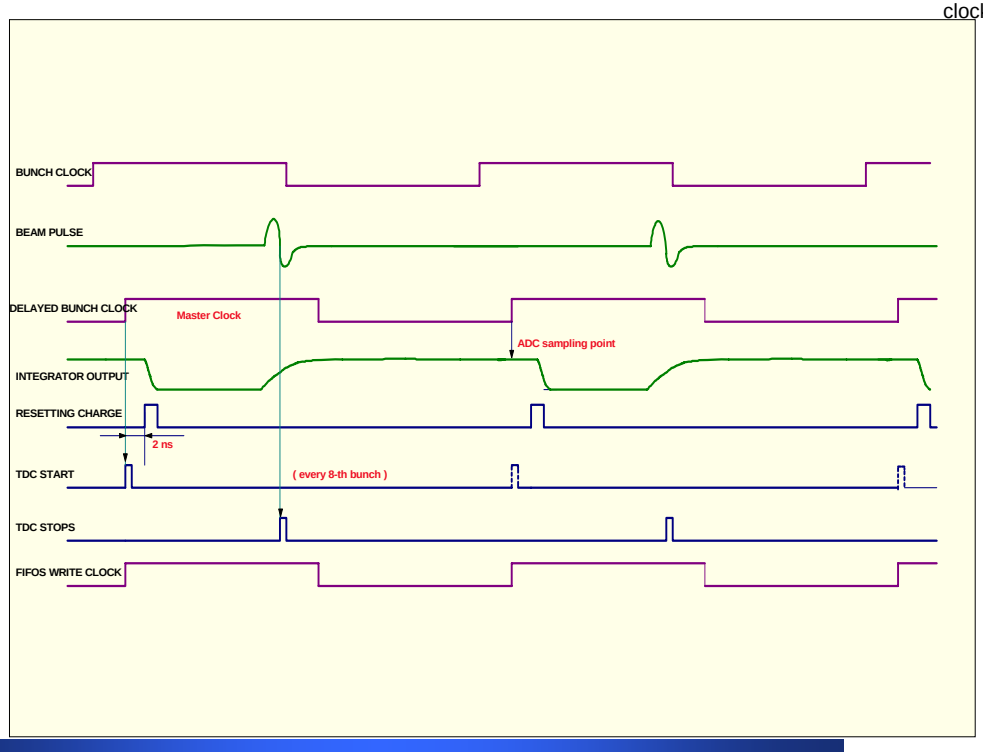

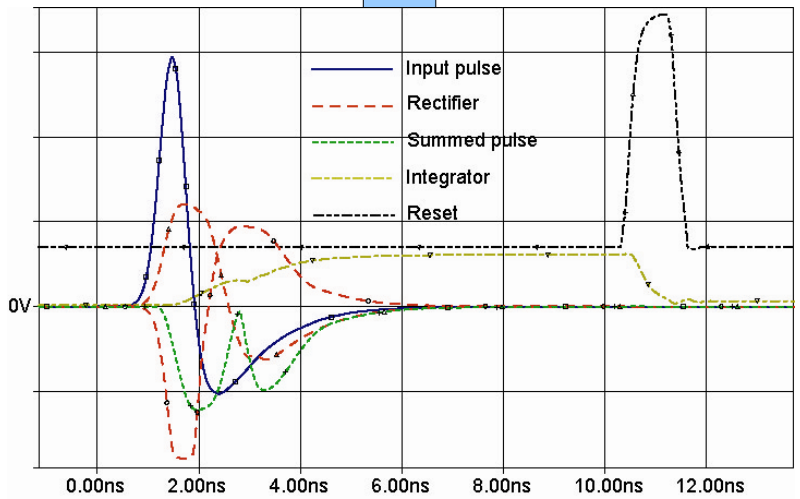

Phase Measurement

- Based on ultra-high performance TDC-GPX from Acam
  - R-Mode: 27 ps resolution over 10 µs at 40MHz
- Pulse is discriminated with programmable threshold
- First version based on zero-crossing detector
  - Zero-crossing moves with varying bunch size/shape
  - 450GeV/7TeV: ~100 ps
- Measurements with respect to every 8th bunch clock edge

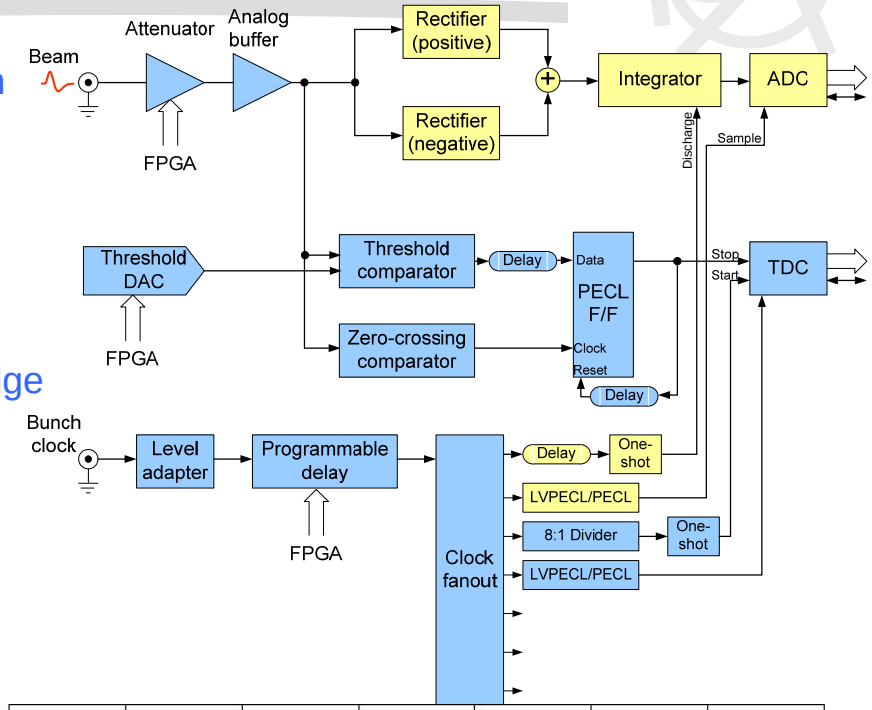

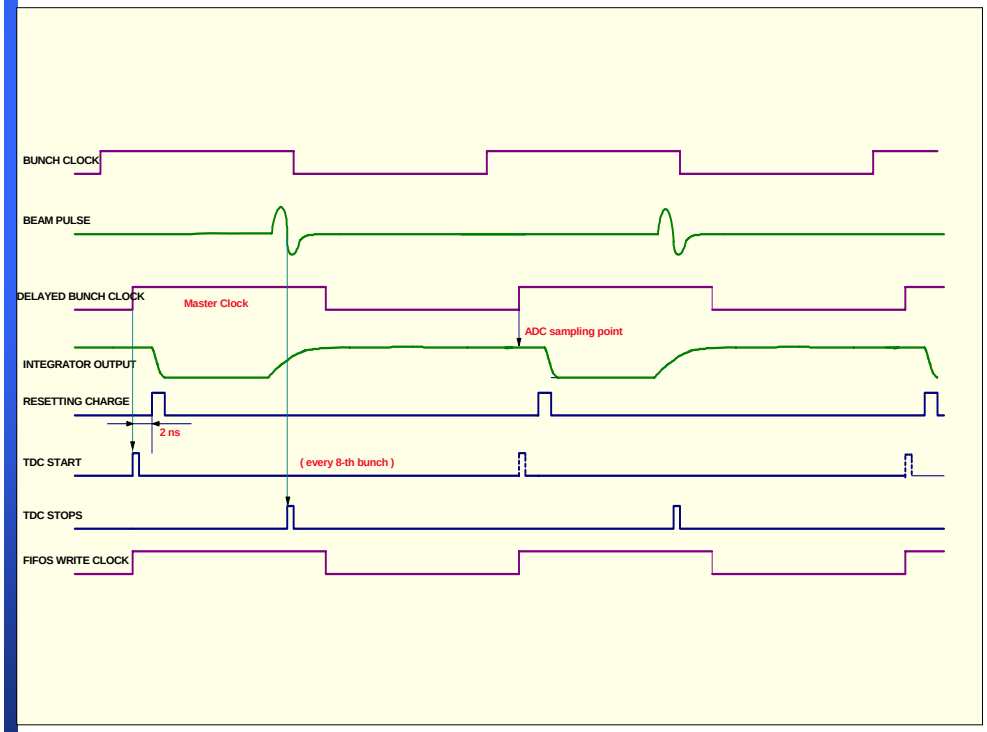

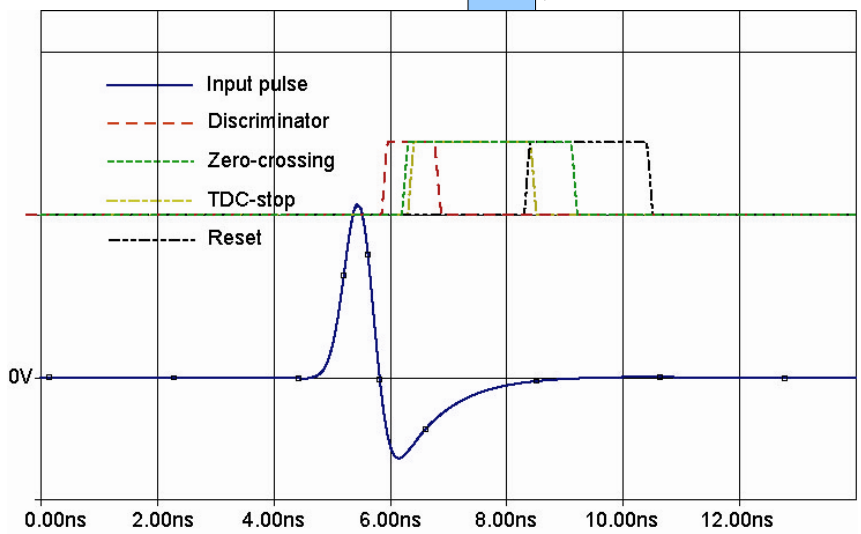

Digital Processing

- Large FPGA :
  - Readout and control interfaces for ADC/TDC
  - Control of attenuator selection
  - Control of threshold DAC
  - Programmable clock delay
  - Linearization of converter characteristics
  - Output compressed 8/4-bit intensity data on FP
  - Produce bunch crossing trigger or gate
- Commanded via control interface, FPGA starts filling FIFOs with phase and intensity measurements of a full orbit upon the following orbit pulse

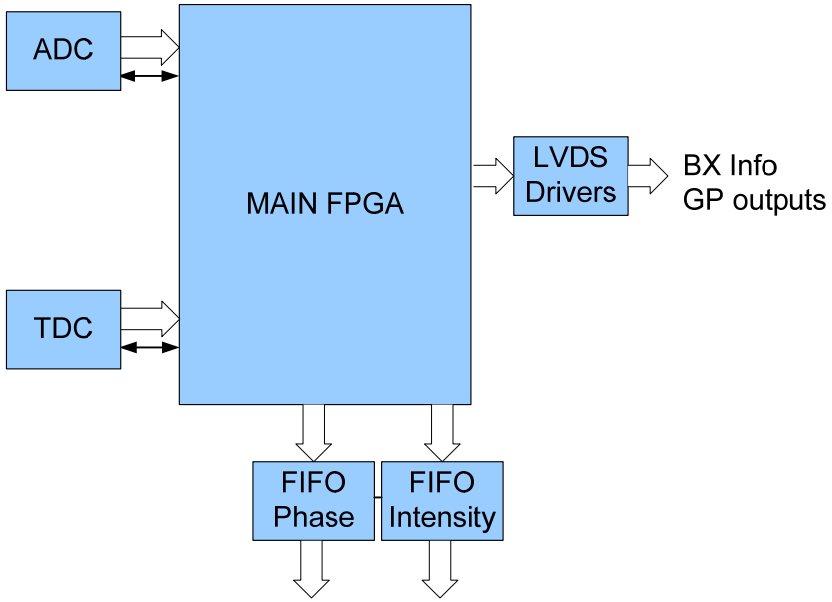

Board Control

- Main control interface based on on board Credit-Card-sized PC with Ethernet.
  - Board busses (Local Bus,I2C,JTAG) produced from PCI bus in a “Glue Logic” FPGA on separate mezzanine
- Alternatively, board may be controlled via a standard 32-bit VME interface implemented in an FPGA
- FPGA programming
  - FPGA may be programmed directly from the CCPC
  - Configuration device may also be programmed directly from the CCPC or onboard header.
  - VME interface FPGA is programmed via a header

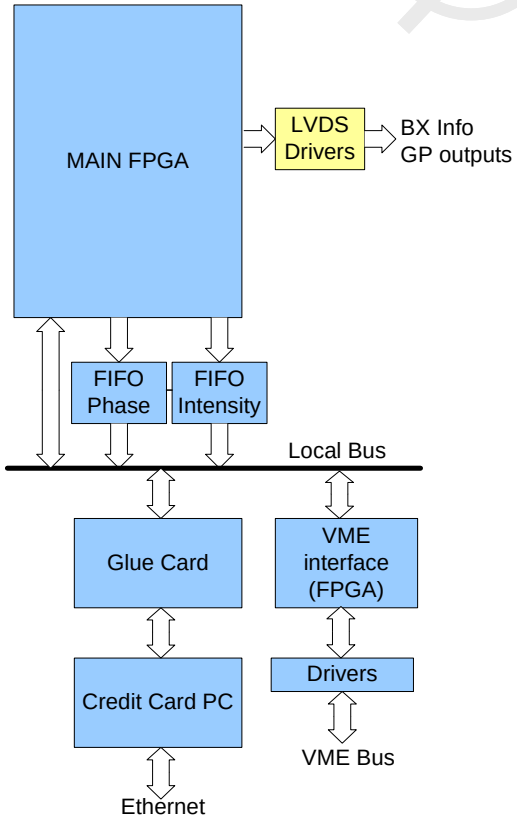

TFC Interface

Bunch crossing information is used in the Timing and Fast Control system and information is put in the ODIN Data Bank which is appended to the event data

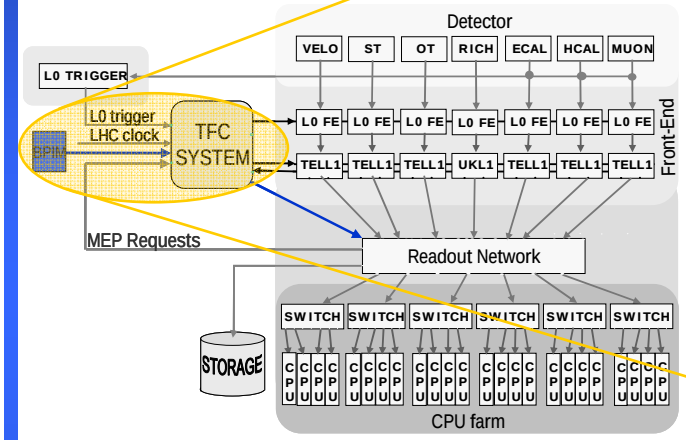

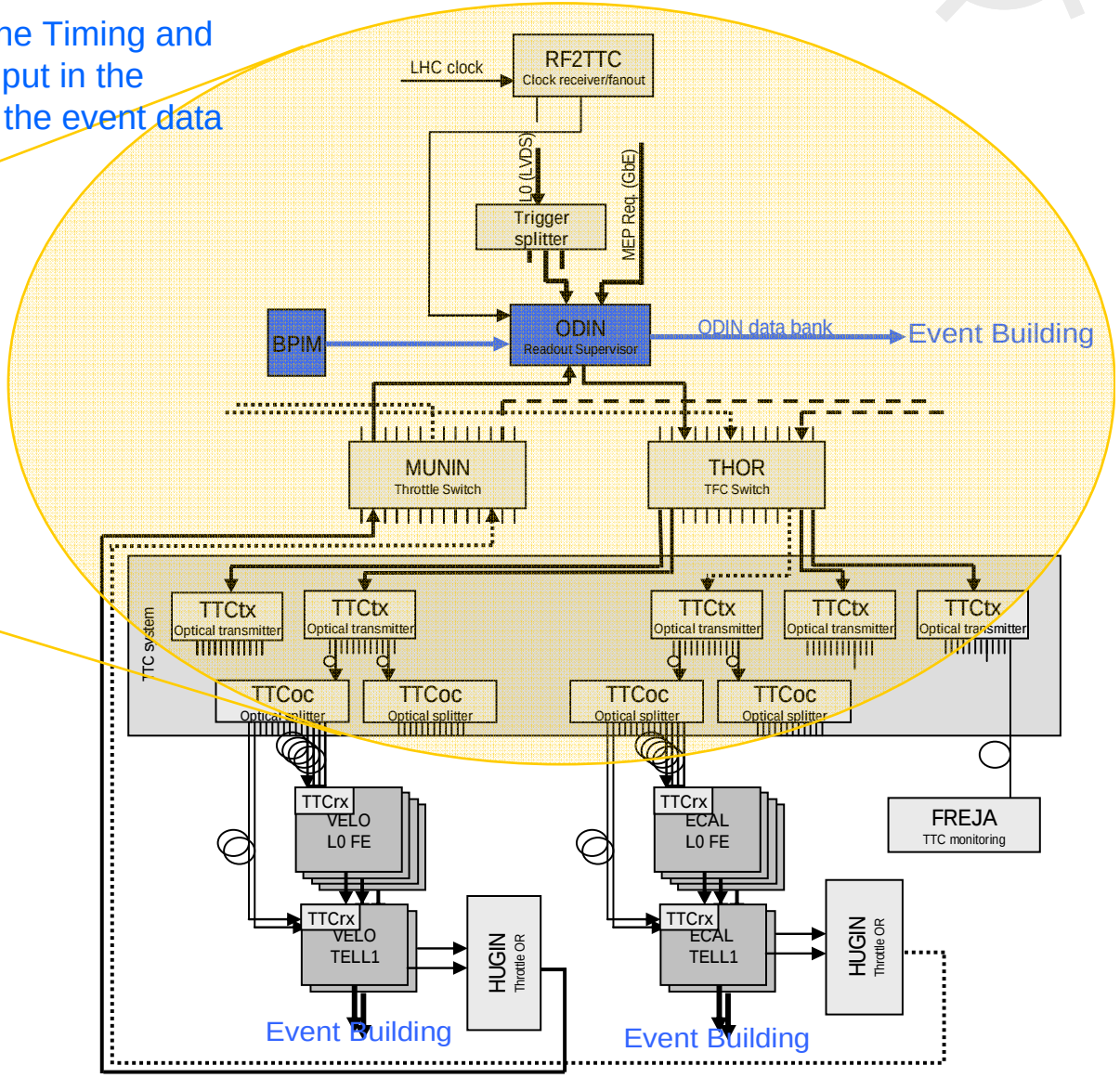

Conclusions

- First prototype of Beam Phase and Intensity Monitor developed for the LHCb BPTXs
  - Variable attenuator for pilot/first year/nominal beam
  - Measuring beam intensity per bunch contrinuously
  - Outputting intensity measurement at 40 MHz via LVDS interface
  - Outputting bunch crossing trigger/gate or whatever based on intensity/timing
  - Resolution of intensity measurement - 12 bits
  - Measuring phase between incoming bunch signal and bunch clock continuously
  - Resolution of phase measurement better than 100ps
  - Accumulates data from full turn triggered by control interface
  - Credit Card PC based control interface and VME interface
  - 6U VME board

  - Directly interfaced to the Timing and Fast Control system in LHCb
    - Bunch crossing information in event data
- Board is being mounted and will hopefully be tested on beam in Oct-Nov
- Improvements:
  - Zero-crossing detection replaced with bunch size/shape independent method
- Interest in the other experiments?