# FRONTEND AND BACKEND ELECTRONICS FOR THE ATLAS NEW SMALL WHEEL UPGRADE

ANN WANG
HARVARD UNIVERSITY

EPS-HEP 2019

ON BEHALF OF THE ATLAS MUON COLLABORATION

# UPGRADING THE ATLAS MUON DETECTOR

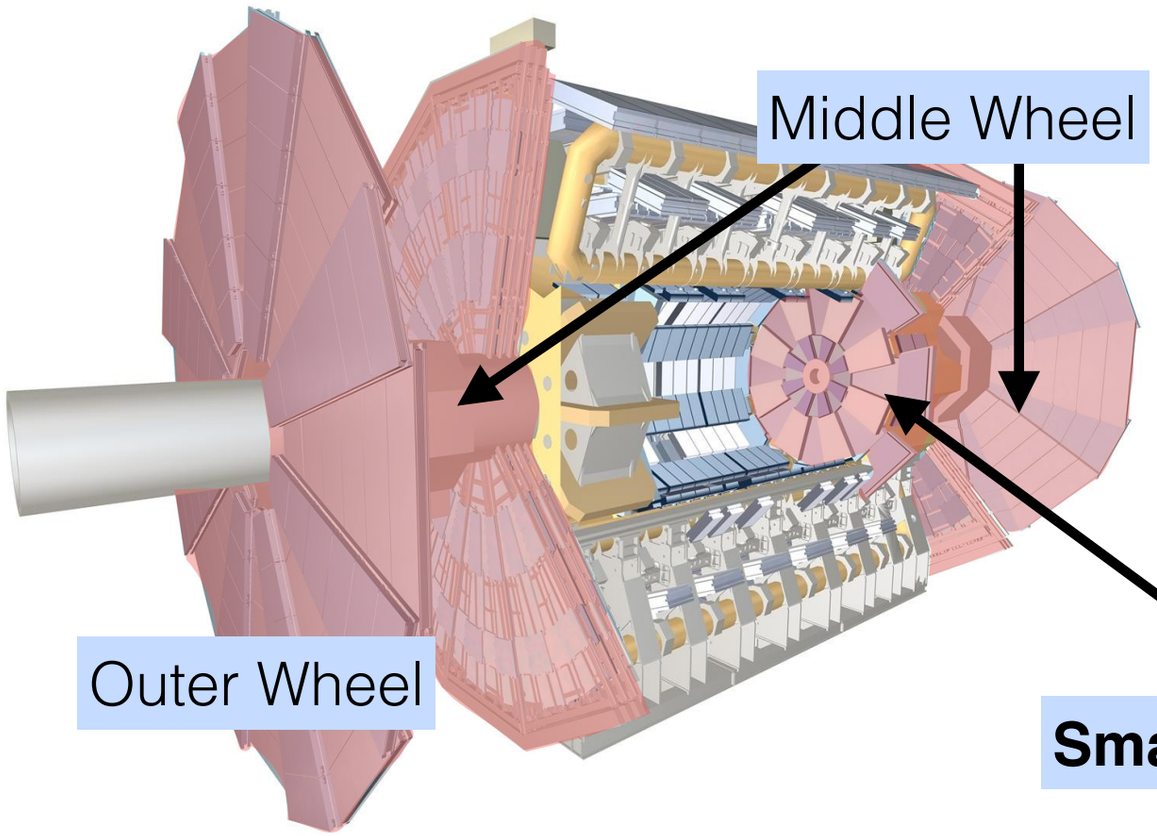


- The High Luminosity Large Hadron Collider will have 2-4x larger peak instantaneous luminosity compared to LHC Run 2
- Run 3 will have a factor of ~1.5x increase in instantaneous luminosity

**Small Wheel**

- The **New Small Wheel (NSW)** upgrade will replace the Small Wheel of the current ATLAS Muon Spectrometer to handle large particle rates
- Important for Run 3, vital for HL-LHC

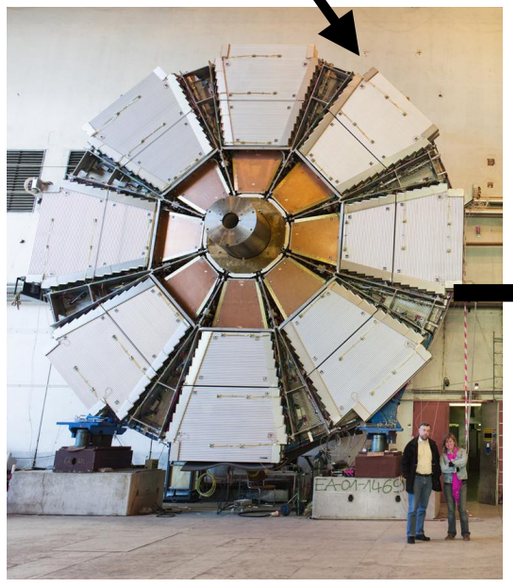

New Small Wheel mechanical structure

# WHY DO WE NEED AN UPGRADE?

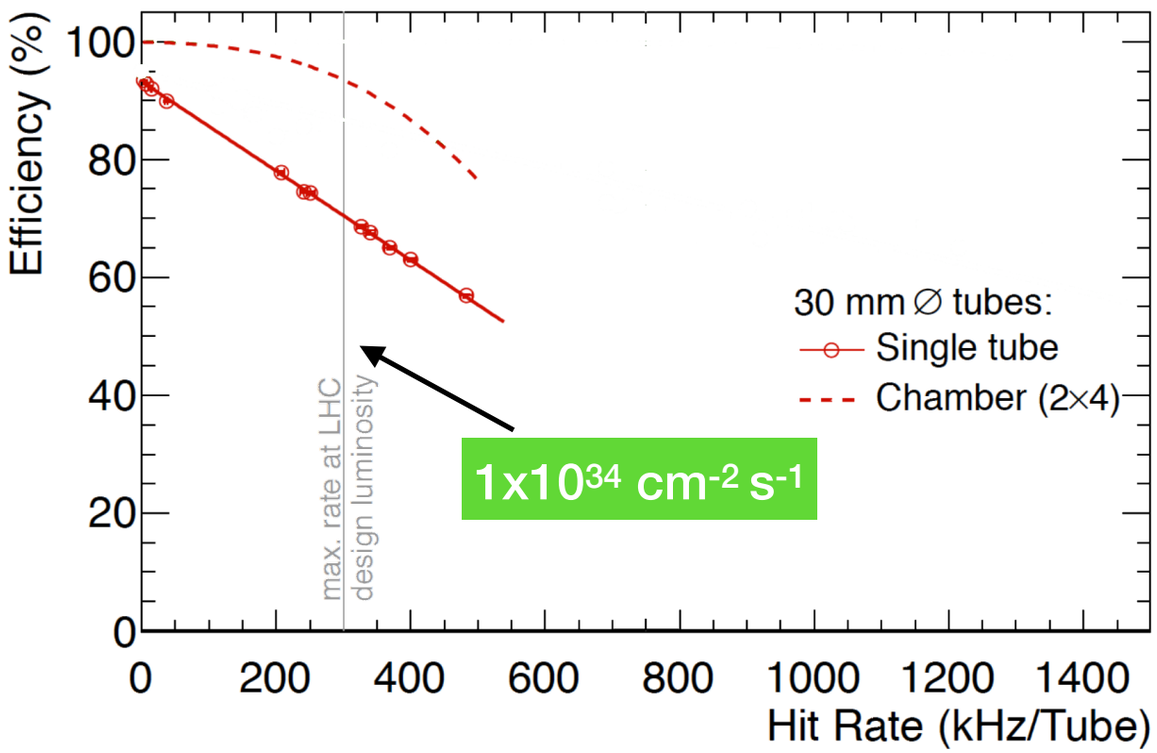


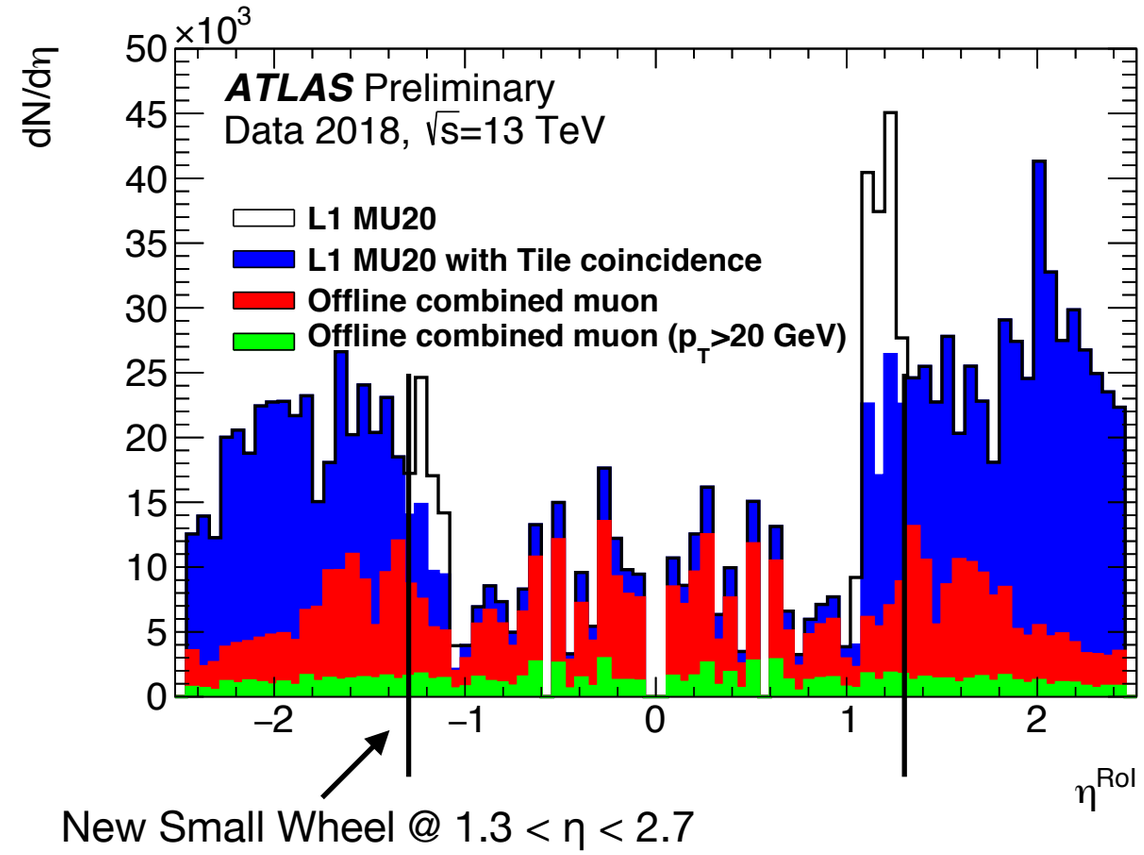


- **Tracking:** Monitored Drift Tubes will lose efficiency at high hit rates due to higher instantaneous luminosity

- **Triggering:** Lowest unprescaled muon trigger is dominated by fake muons in the endcap region

# WHY DO WE NEED AN UPGRADE?

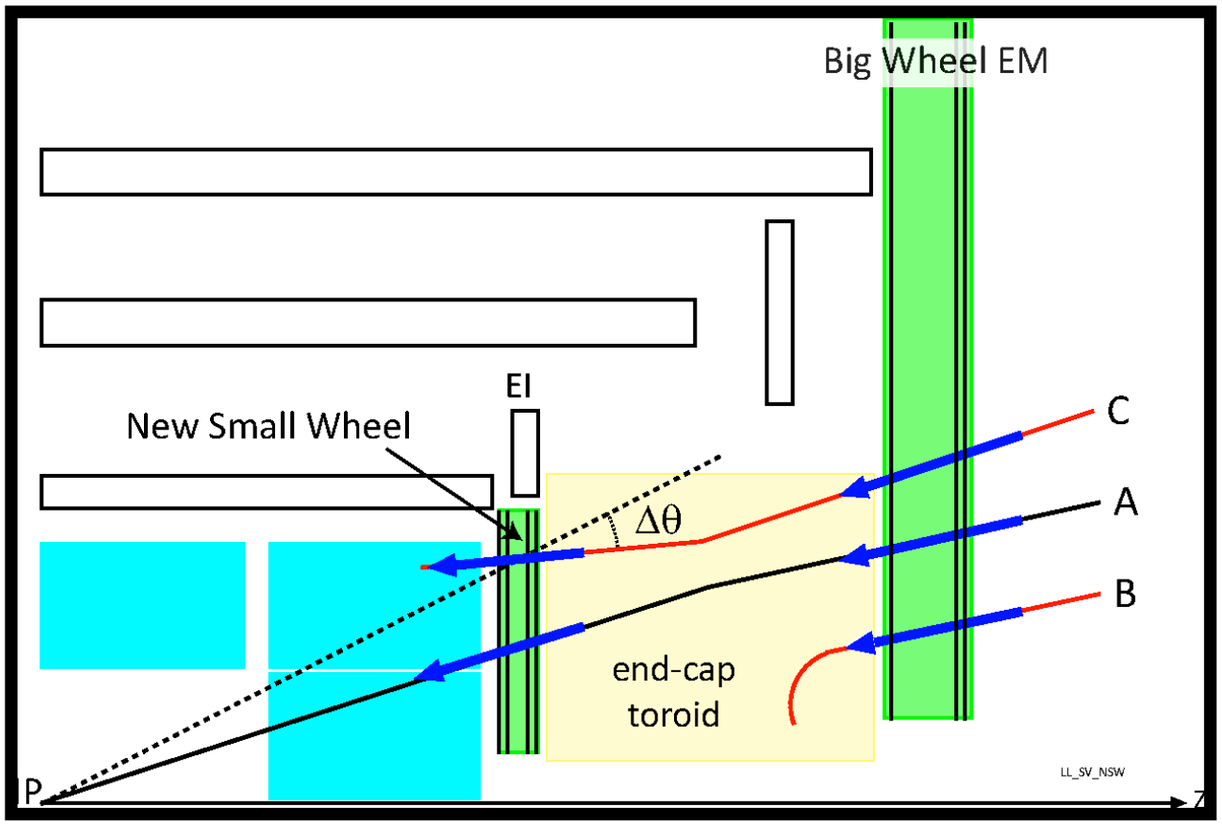


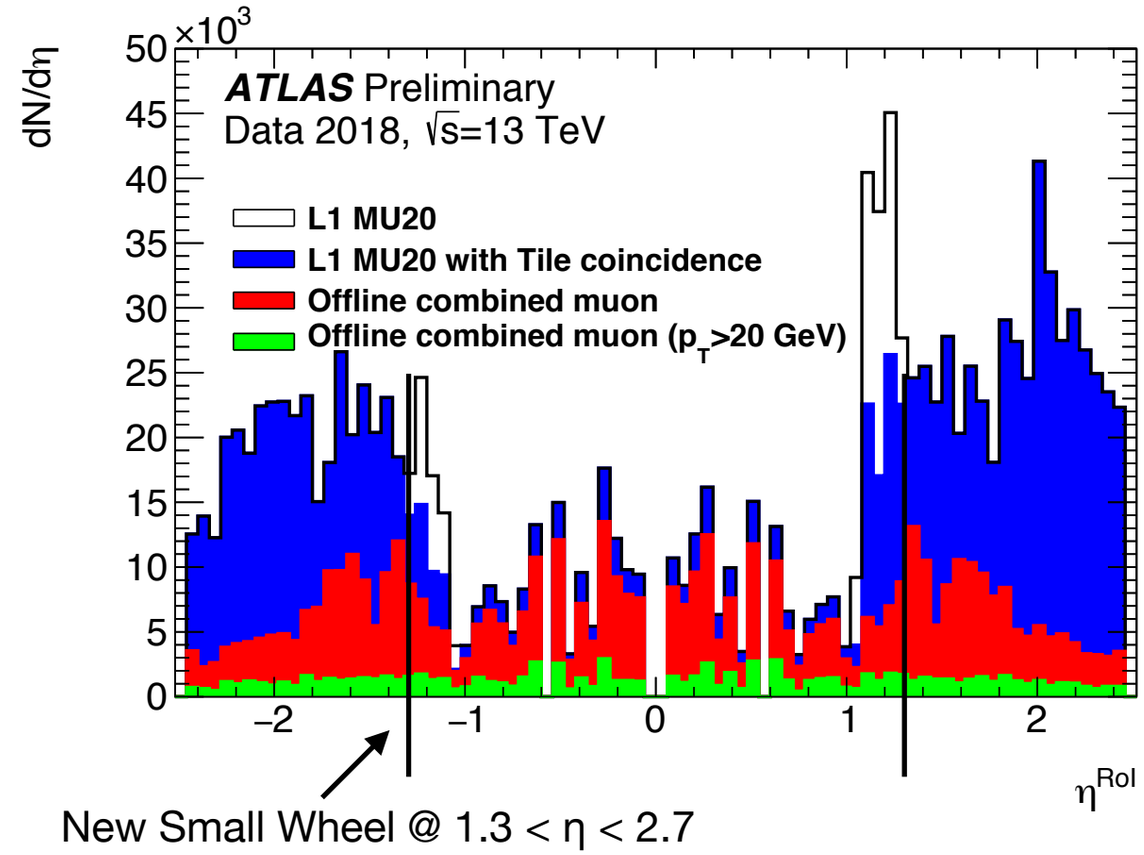


- **Tracking:** Monitored Drift Tubes will lose efficiency at high hit rates due to higher instantaneous luminosity

- **Triggering:** Lowest unprescaled muon trigger is dominated by fake muons in the endcap region

# NEW SMALL WHEEL UPGRADE

## Micromegas (MM) detector

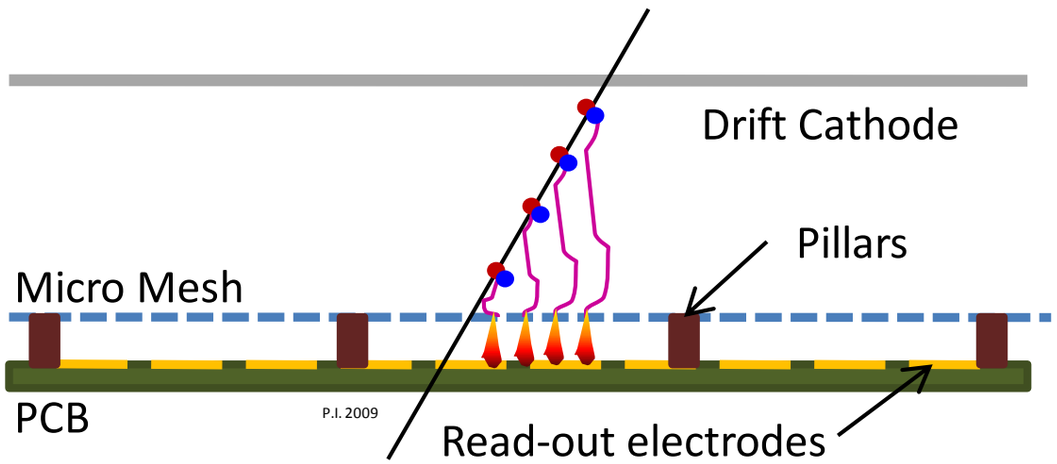


## small strip Thin Gap Chambers (sTGC)

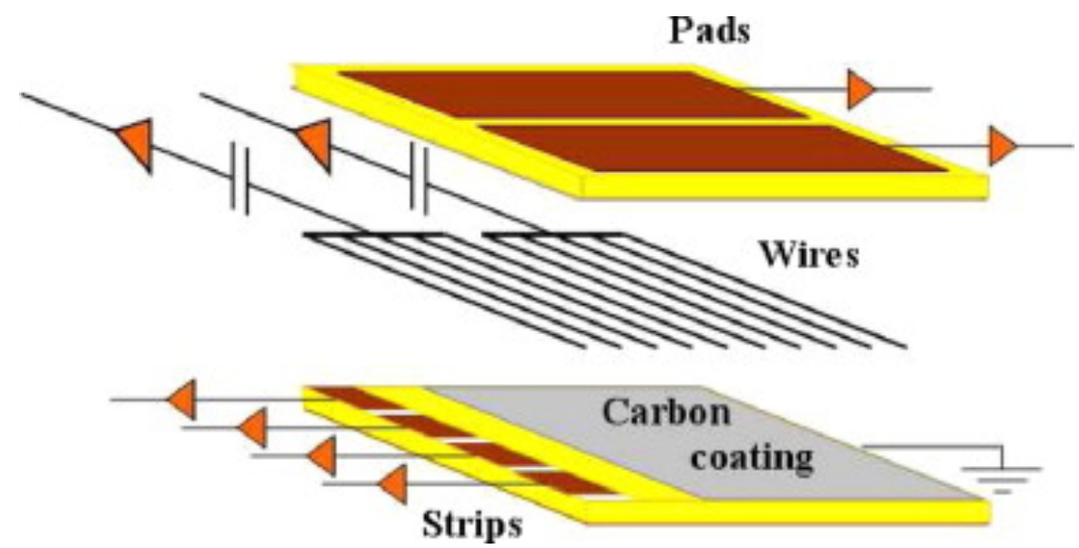


- **Precision tracking**
  - **small strip pitch** (~425-450 microns compared to current 3 cm drift tube)
  - **short drift time** (~100 ns compared to ~750 ns for drift tubes)
  - fine pitch and fast drift time allow MM to handle high particle rates

- **Fast triggering**
  - **small strip pitch** (3.2 mm) compared to TGC wire groups (~10-50 mm) —> ~ 2 mrad trigger track resolution
  - **high efficiency** under tests with γ irradiation of 20 kHz/cm$^2$
  - will **reduce** the Level 1 lowest unprescaled **muon trigger rate** by > ~ 7x

**also provides a trigger signal!**

**also used in tracking!**

# NEW SMALL WHEEL ELECTRONICS

- A combination of custom **frontend** and **backend** boards + chips are needed!
- Need to handle the MM and sTGC readout and trigger paths

Micromegas
Frontend Board

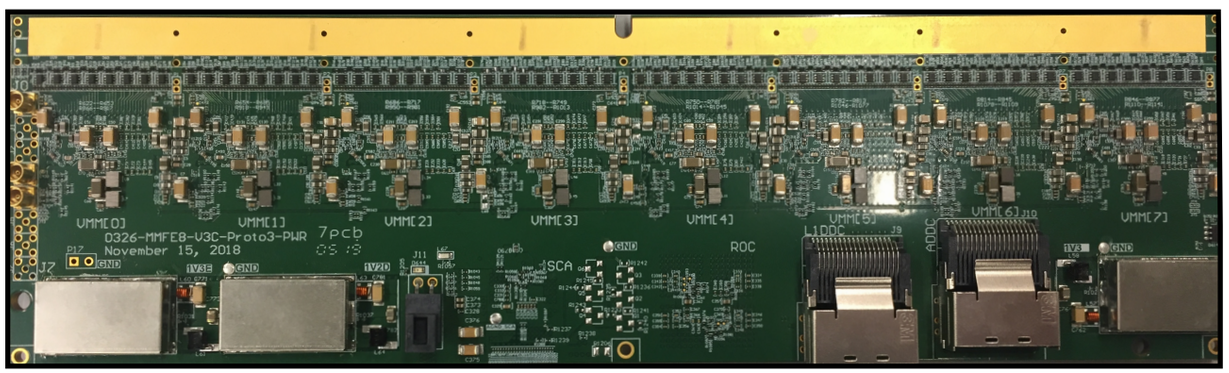

Address in Real Time
Data Driver Card

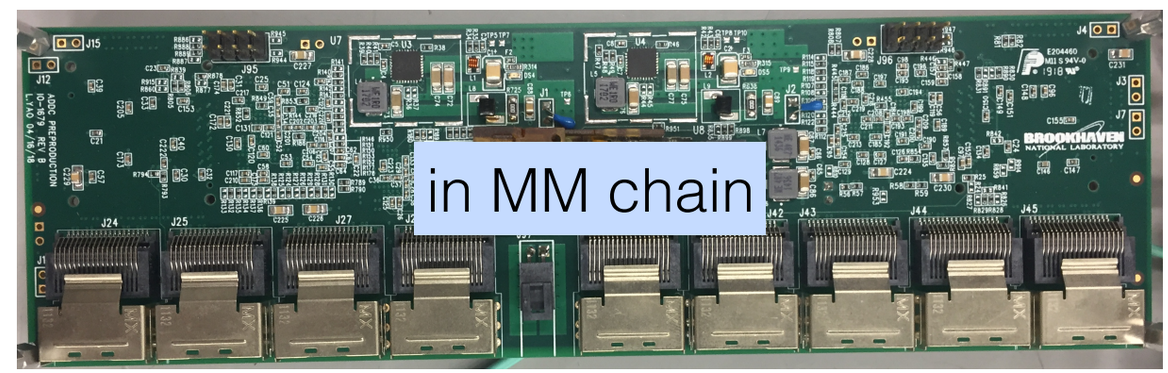


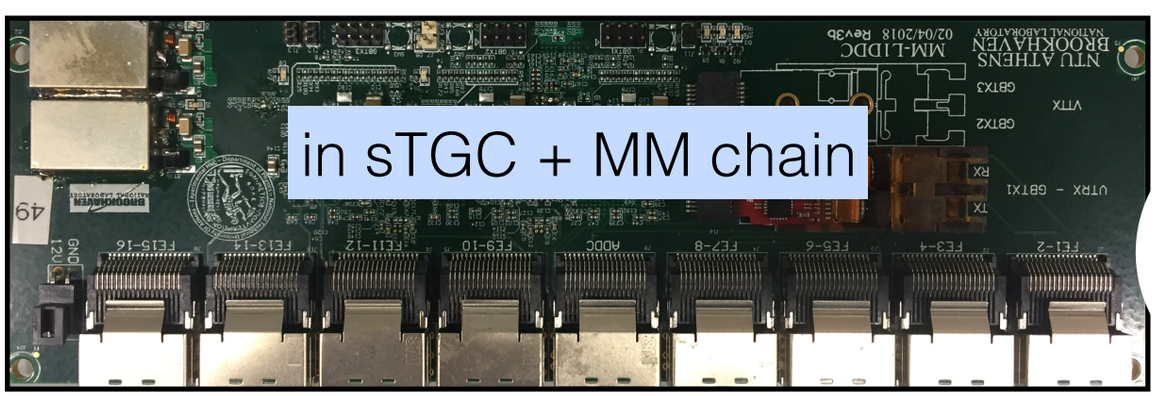


Level 1 Data
Driver Card

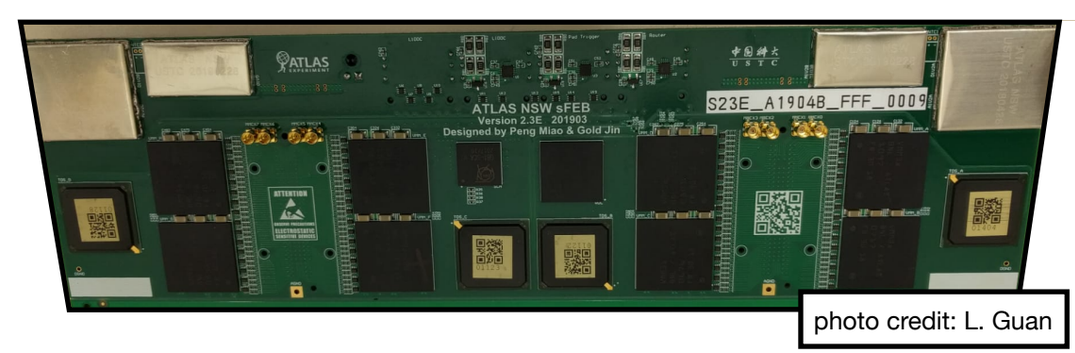


photo credit: L. Guan

strip Frontend
Board

# MICROMEGAS READOUT PATH

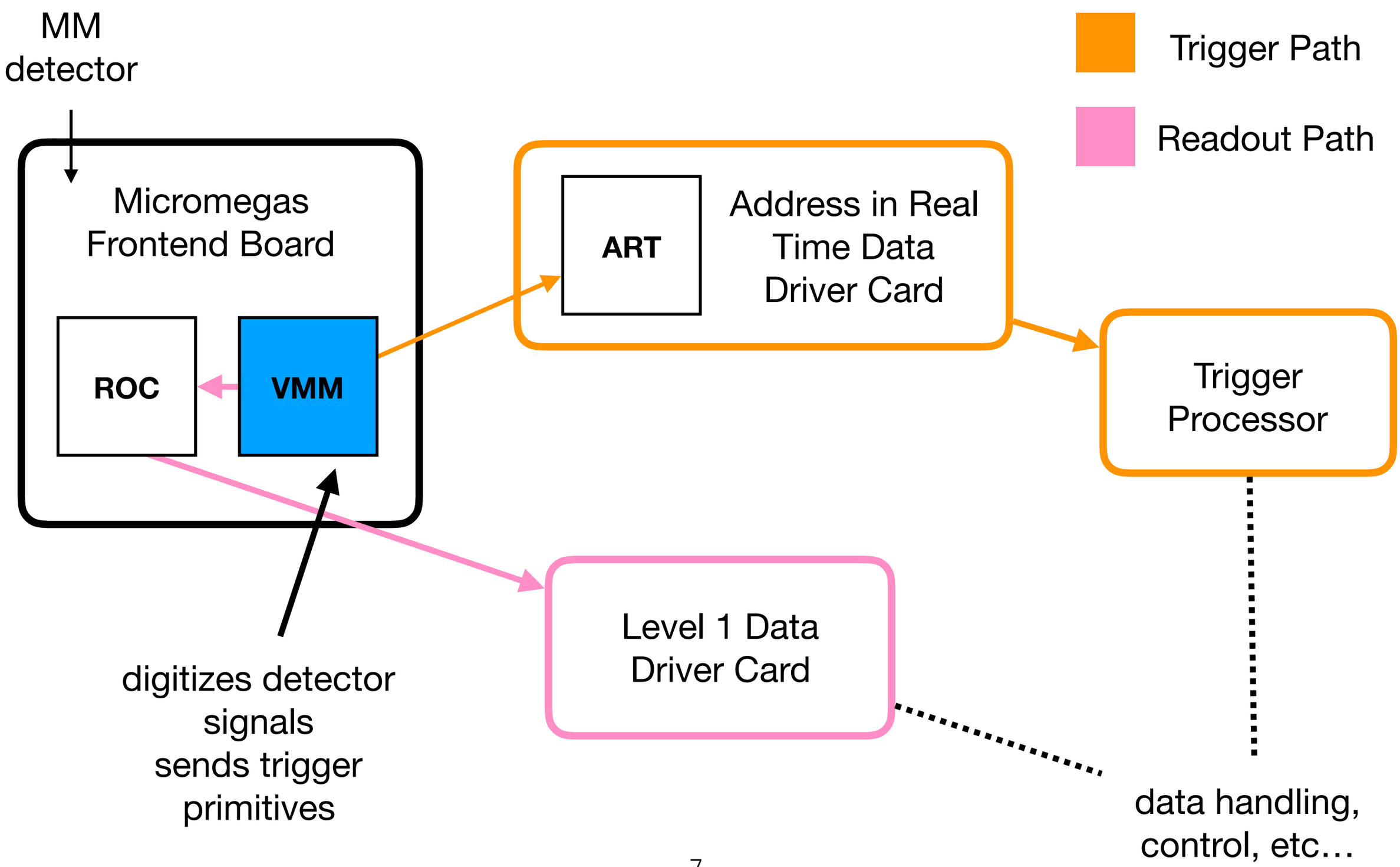

# MICROMEGAS READOUT PATH

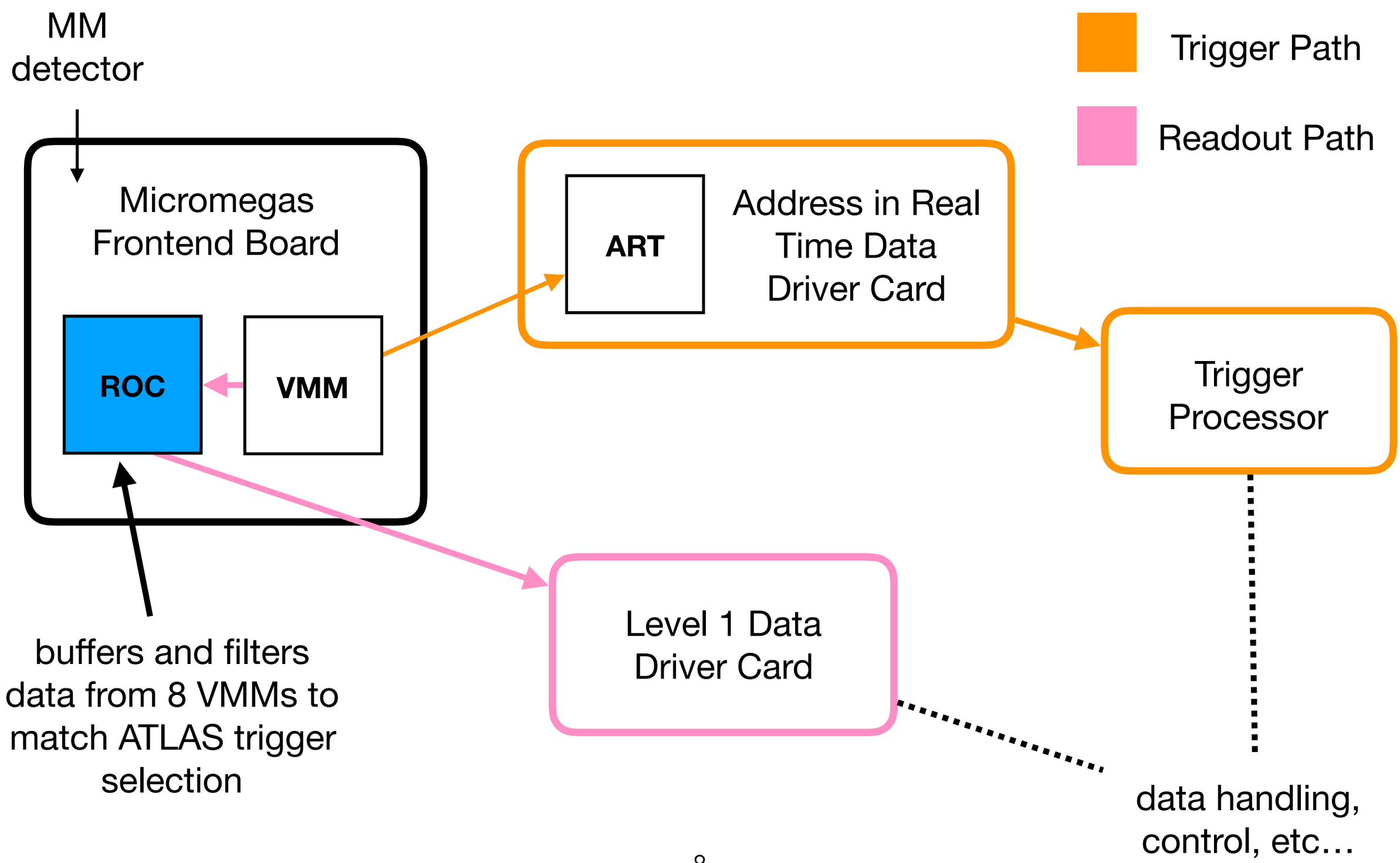

# MICROMEGAS READOUT PATH

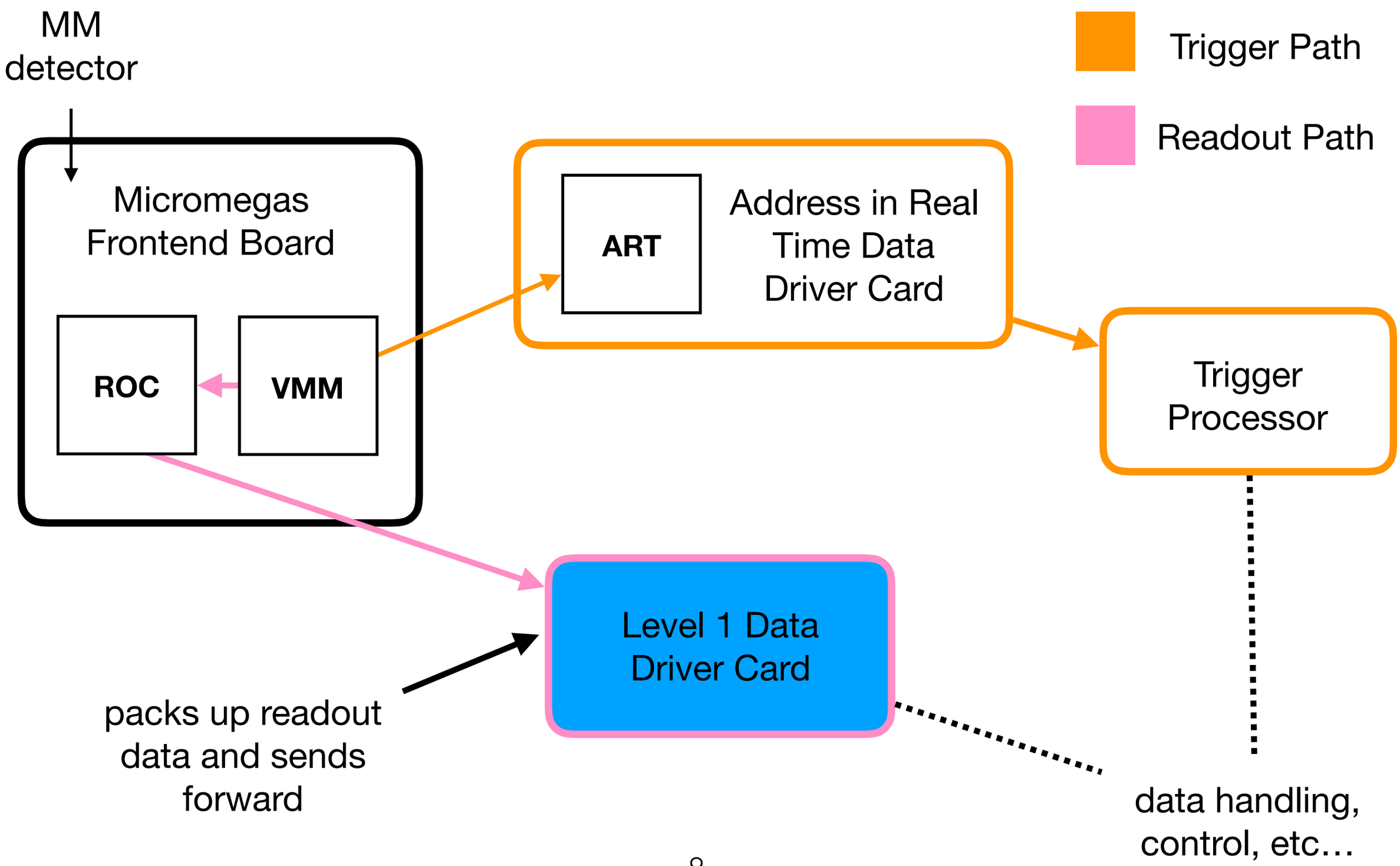

# MICROMEGAS TRIGGER PATH

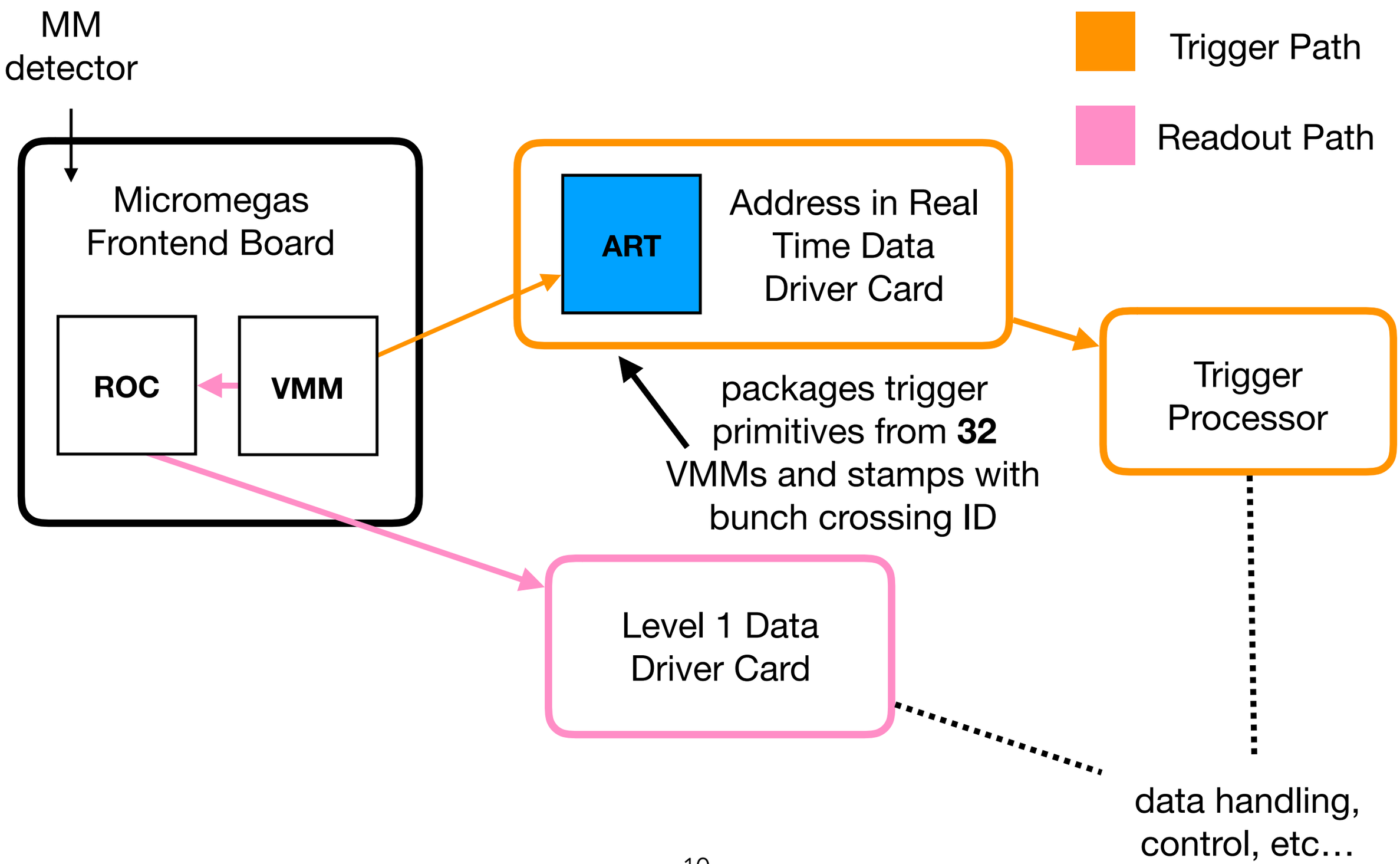

# MICROMEGAS TRIGGER PATH

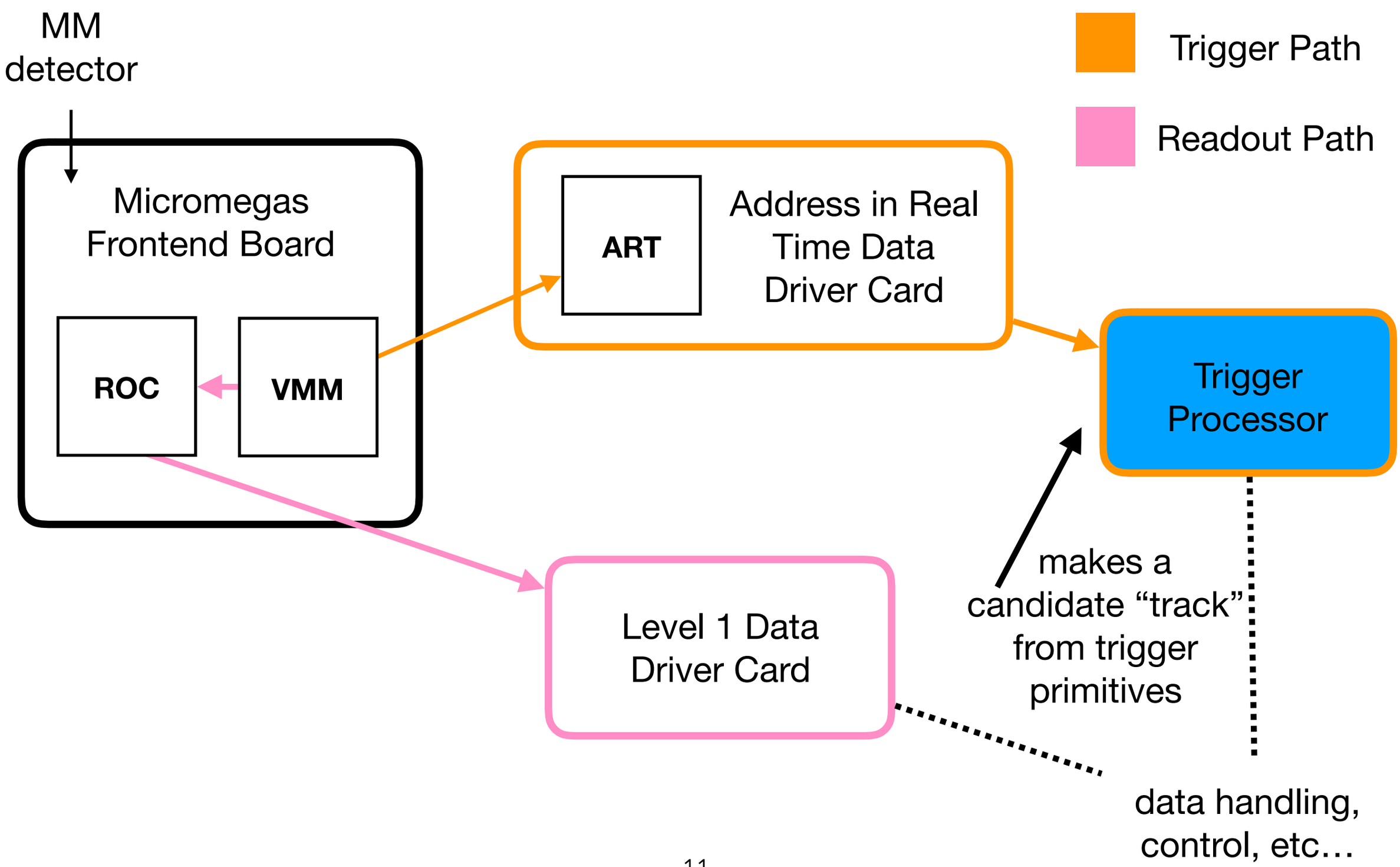

# STGC TRIGGER PATH

**key design principle:** use pad signals to filter out which strip signals to send —> data reduction

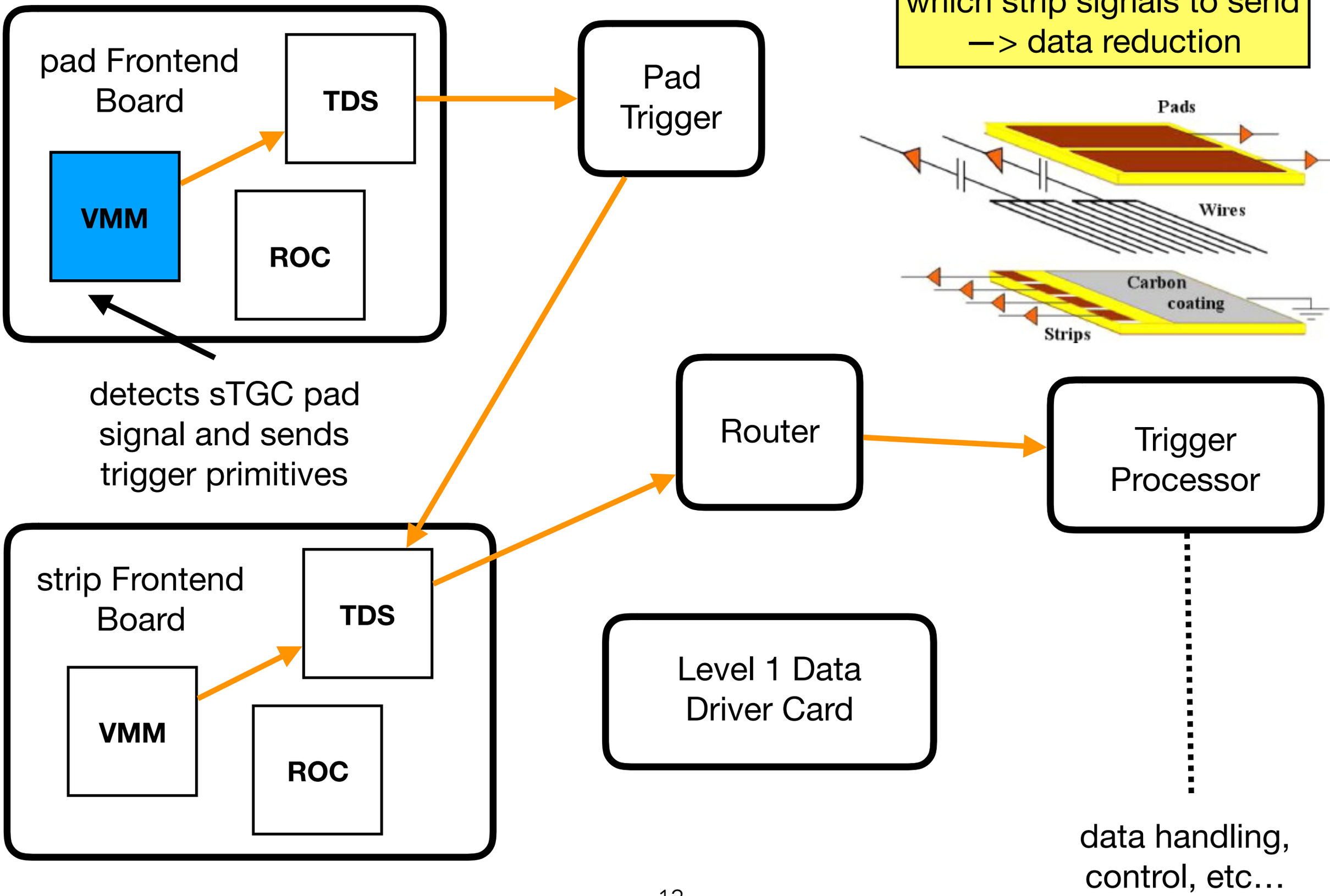

# STGC TRIGGER PATH

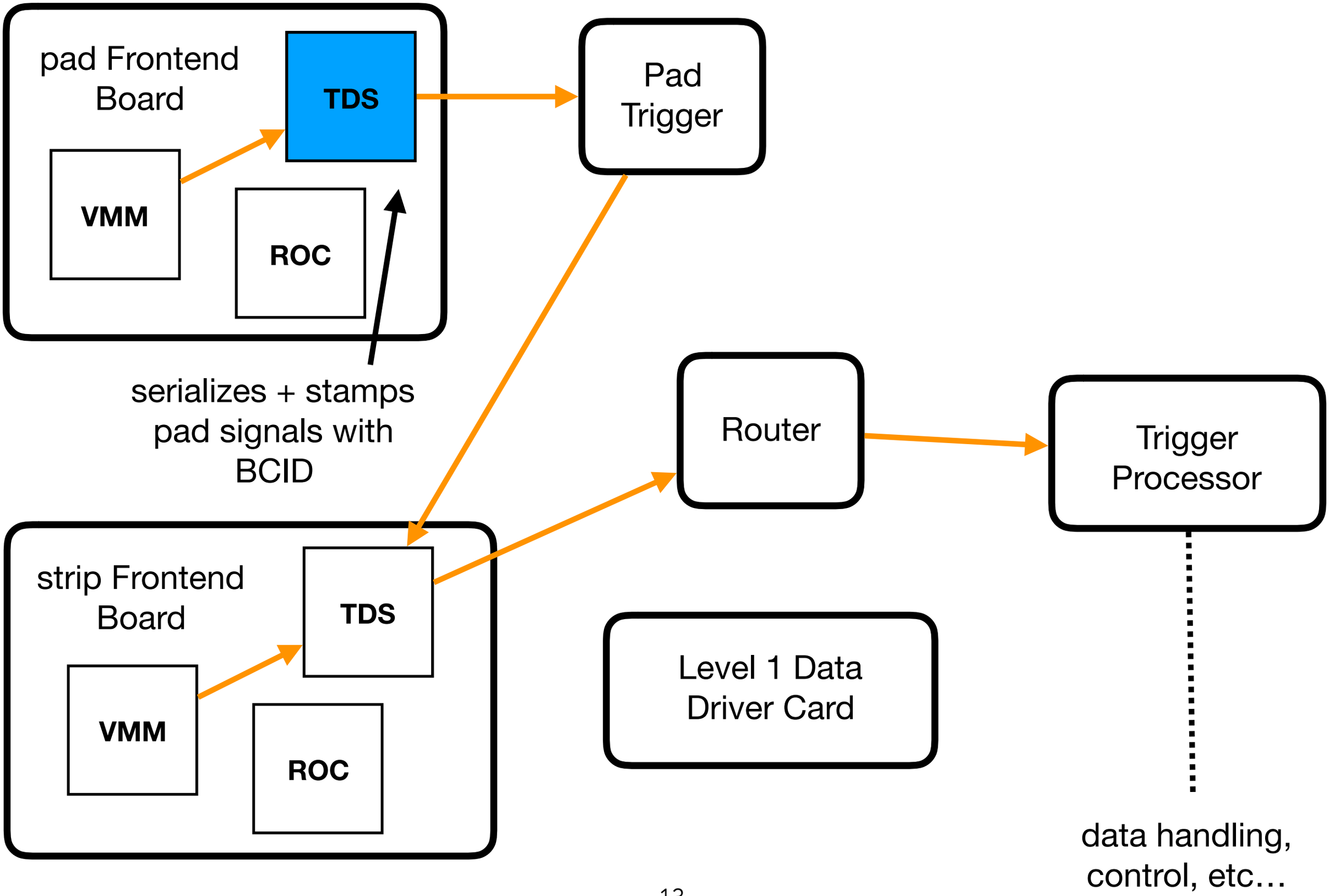

# STGC TRIGGER PATH

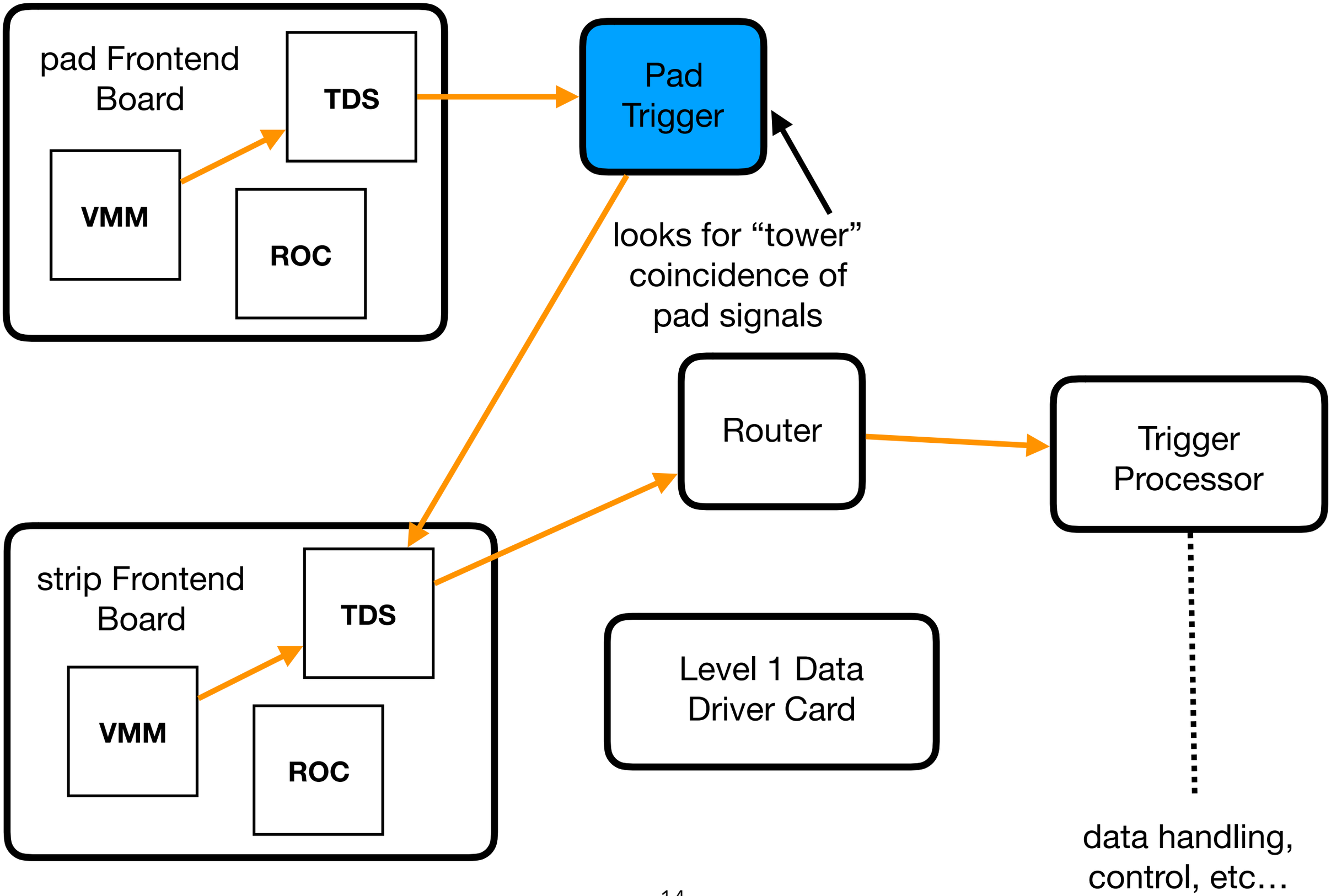

# STGC TRIGGER PATH

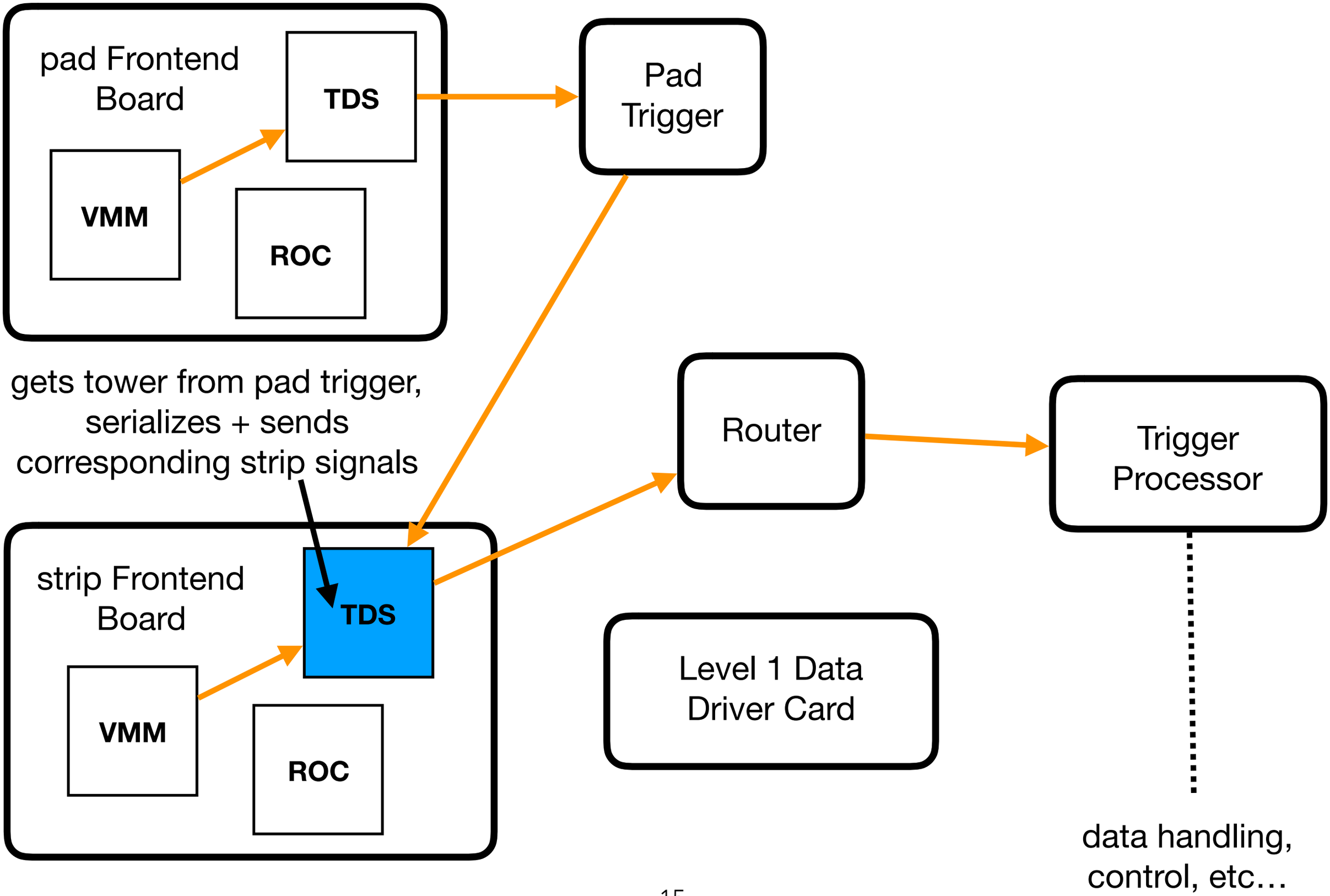

# STGC TRIGGER PATH

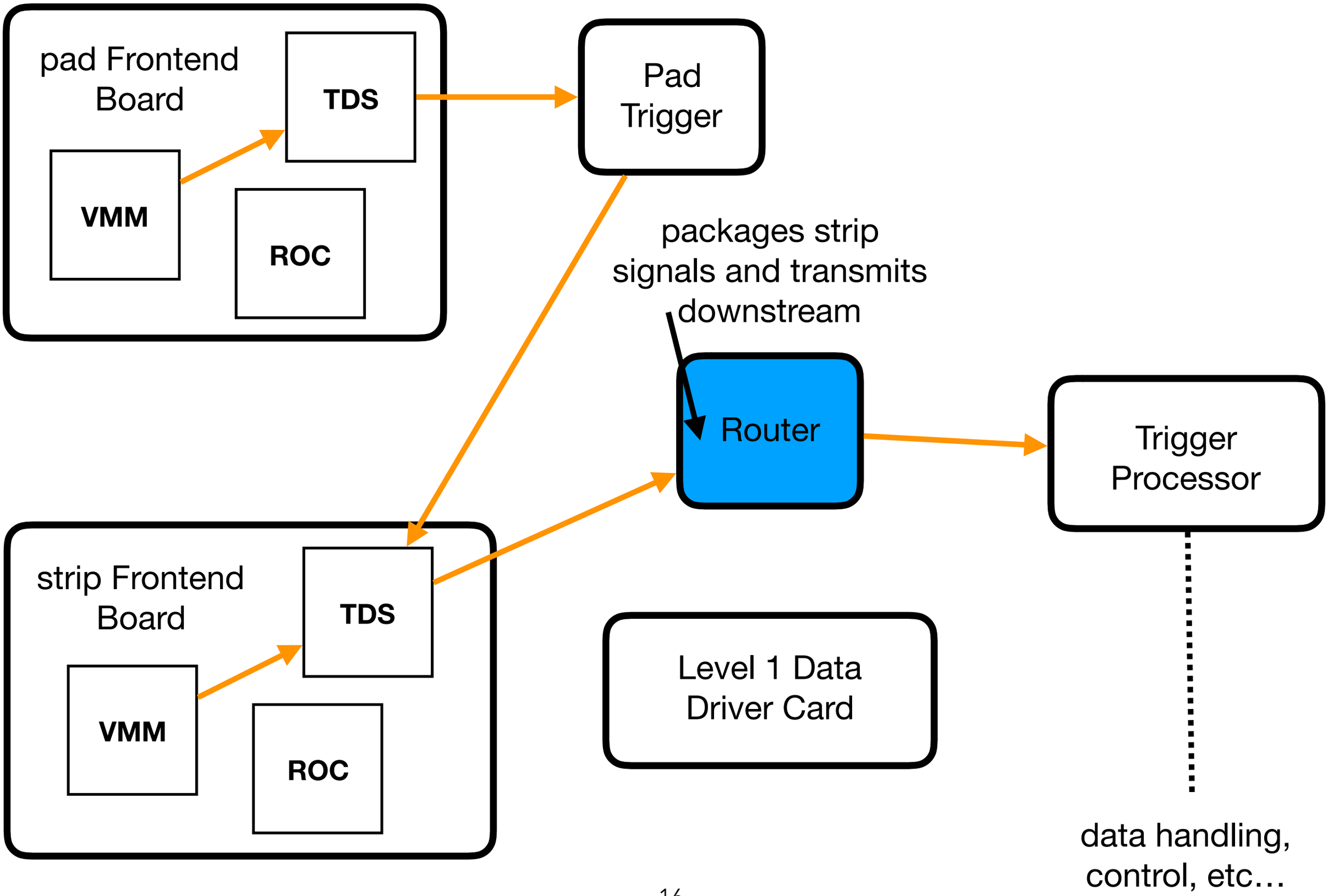

# STGC TRIGGER PATH

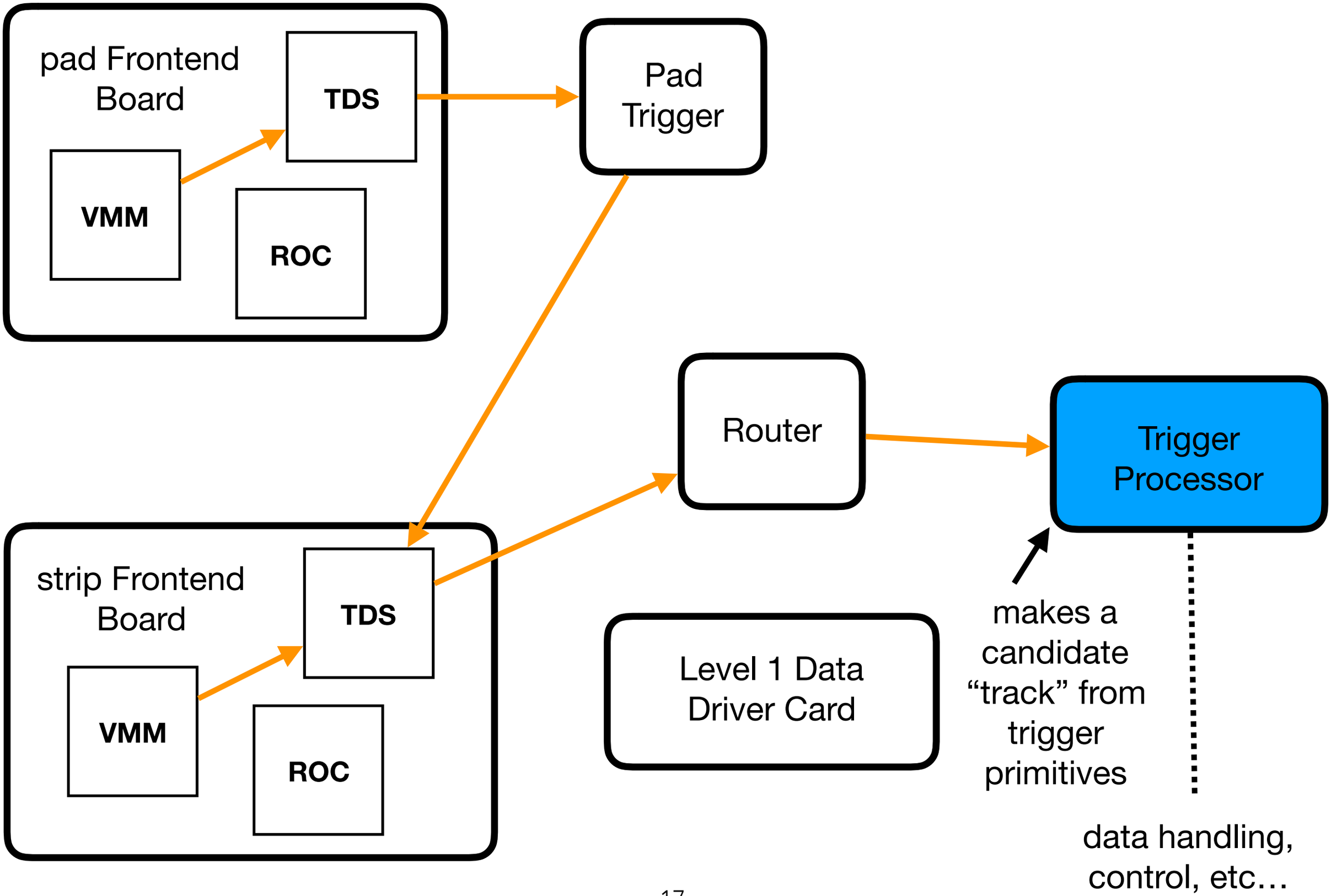

# STATUS OF ELECTRONICS (HARDWARE)

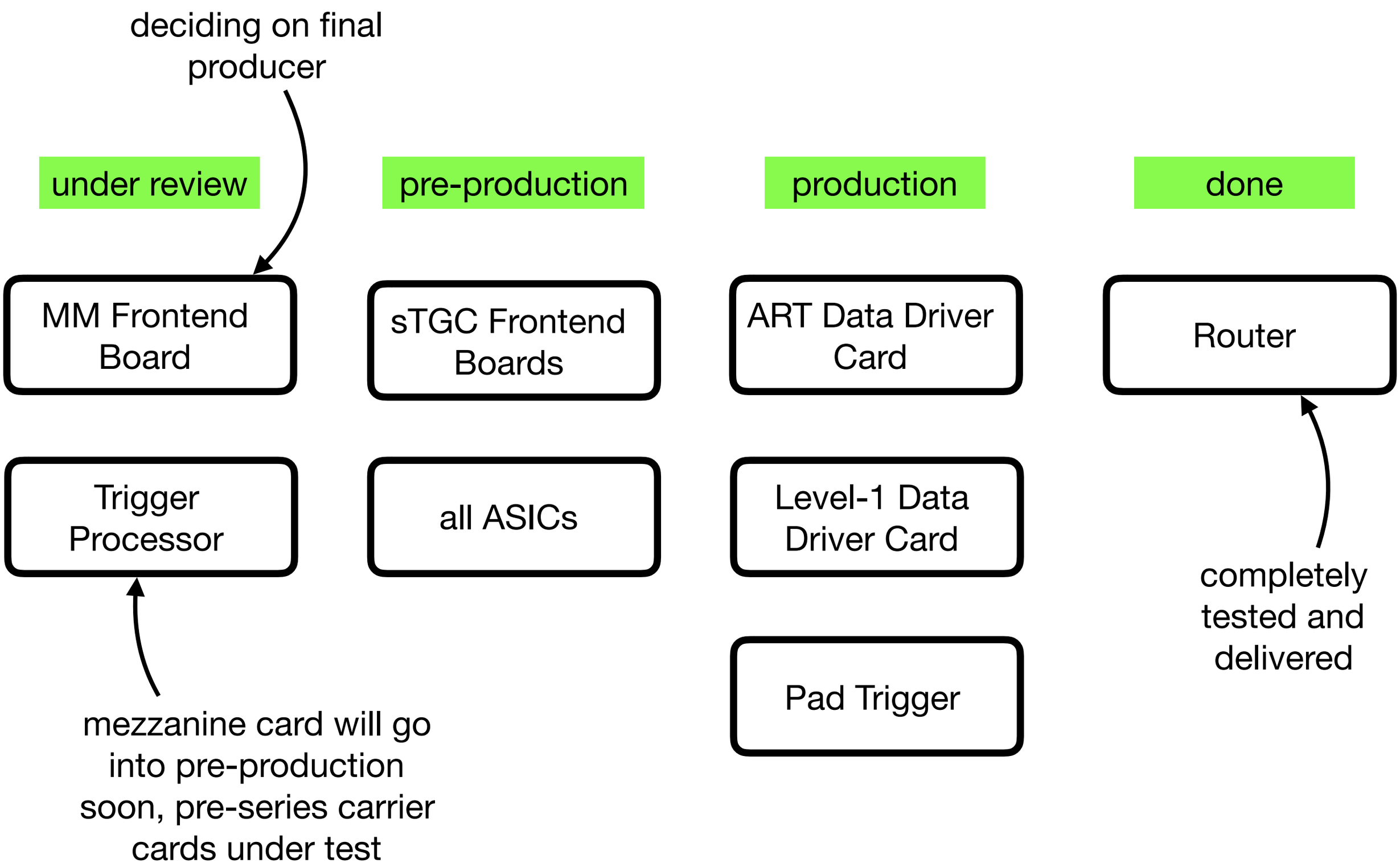

# MICROMEGAS READOUT CHAIN TESTS

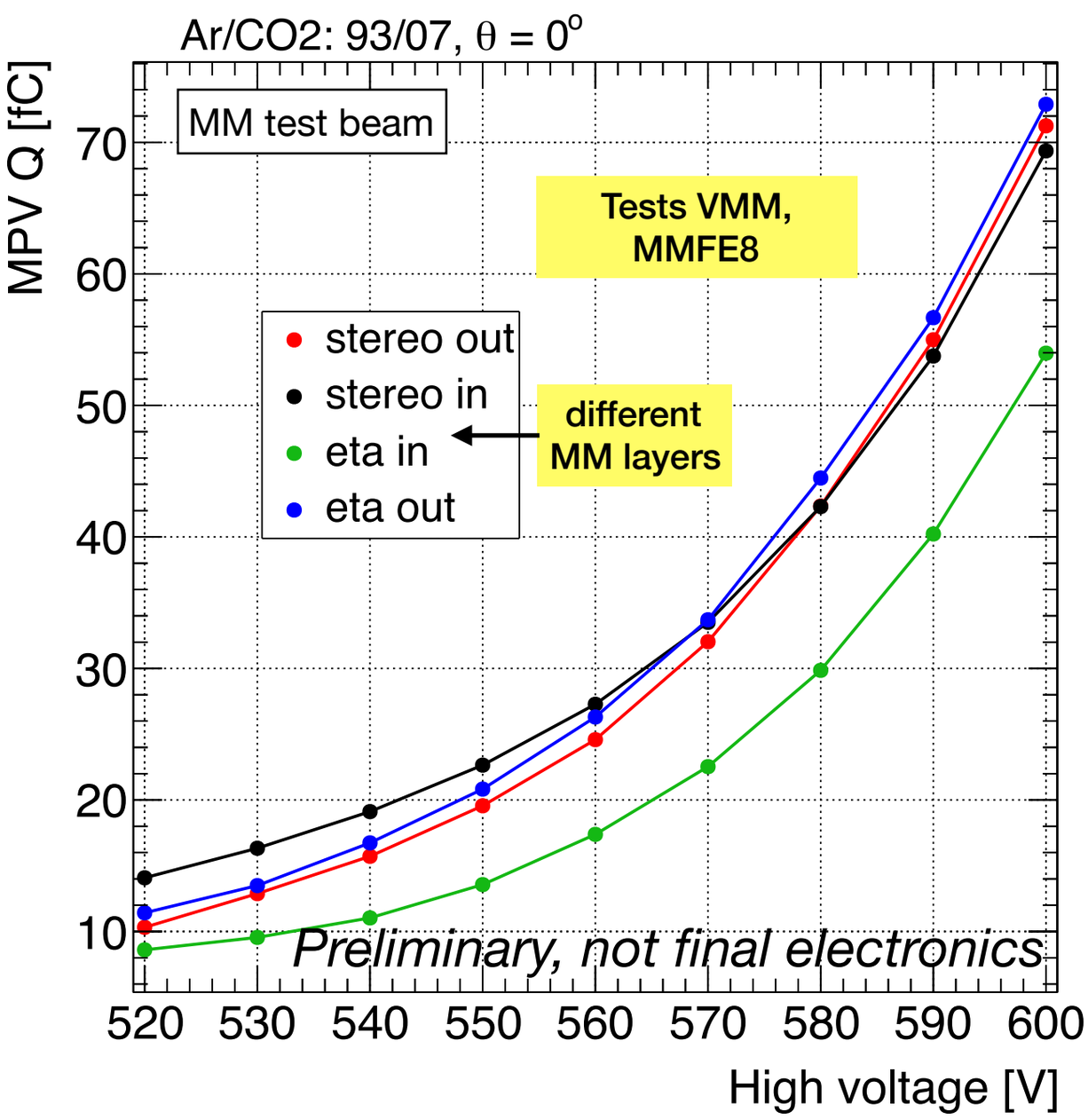


July 2018 Test beam with prototype MMFE8s + VMM3 on a SM2

- Electronics have been **continuously** tested during their development and review chain
- For the readout path, we have conducted measurements of efficiency, resolution, noise in a 2018 test beam with pions on a full-size chamber (**VMM, Frontend Board**)

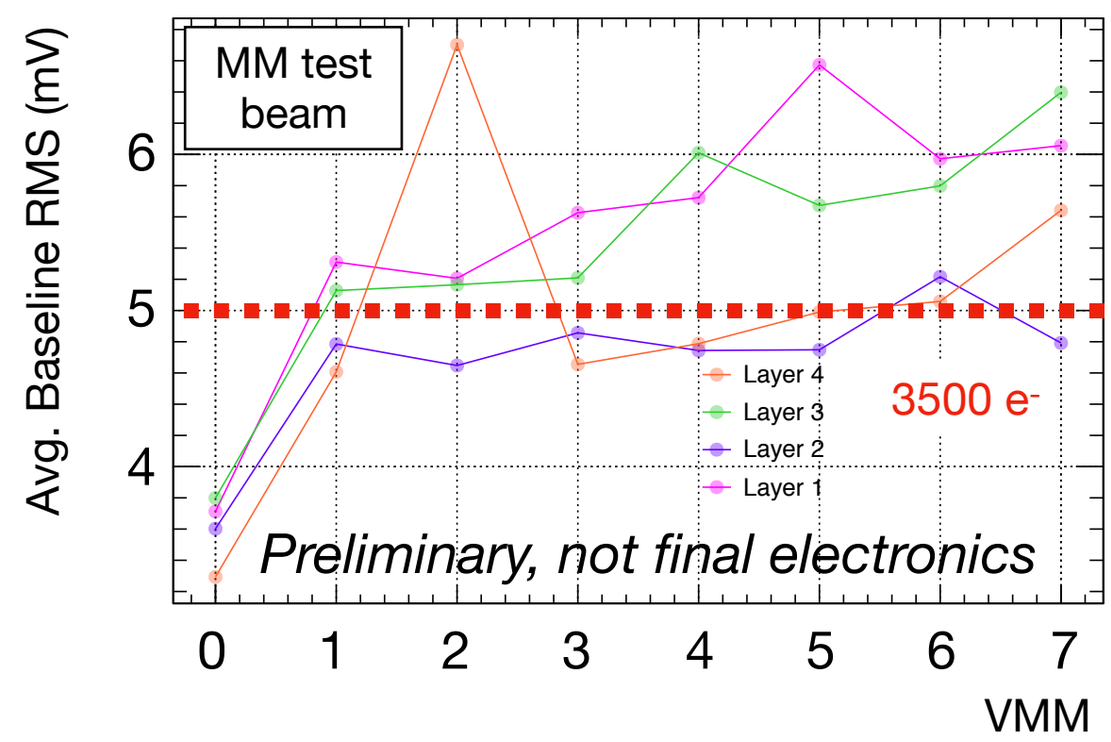

# MICROMEGAS READOUT CHAIN TESTS

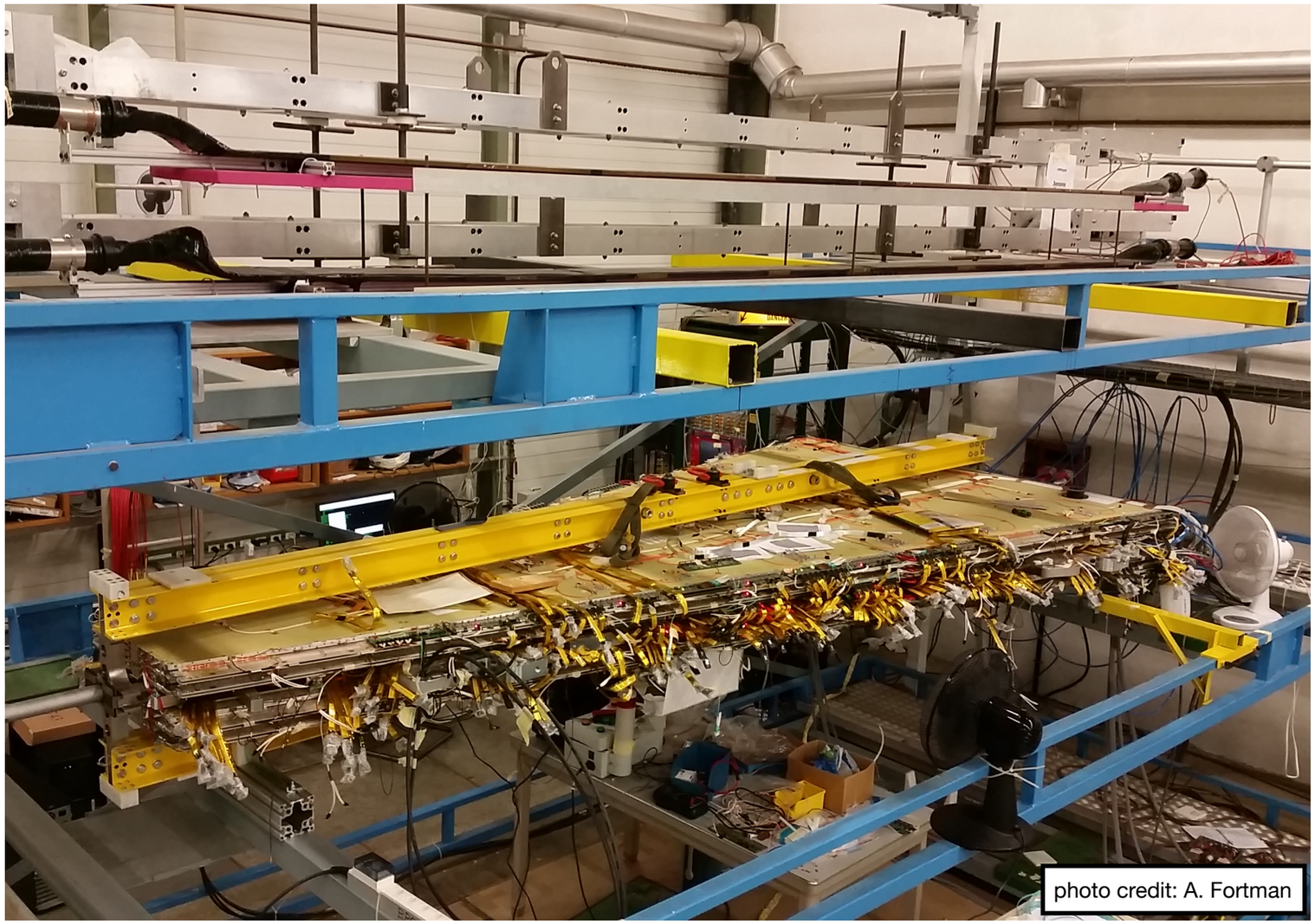


- Now evaluating a double wedge (1/16 of a MM wheel) which is planned for ATLAS installation for HV stability and electronics noise
- Testing the "full system" with 120 Hz of cosmics
- Have successfully collected data with the **VMM** —> **ROC** —> **Level-1 Data Driver Card prototype**

# MICROMEGAS TRIGGER CHAIN TESTS

- For the trigger chain, we developed and debugged the trigger processor firmware by taking cosmic muon data with a prototype chamber, **ART Data Driver Card (ADDC) v1** and prototype **MM Frontend Boards**
- In the testbeam, the trigger path from **VMM** to the **ADDC v2** with **ART** was validated

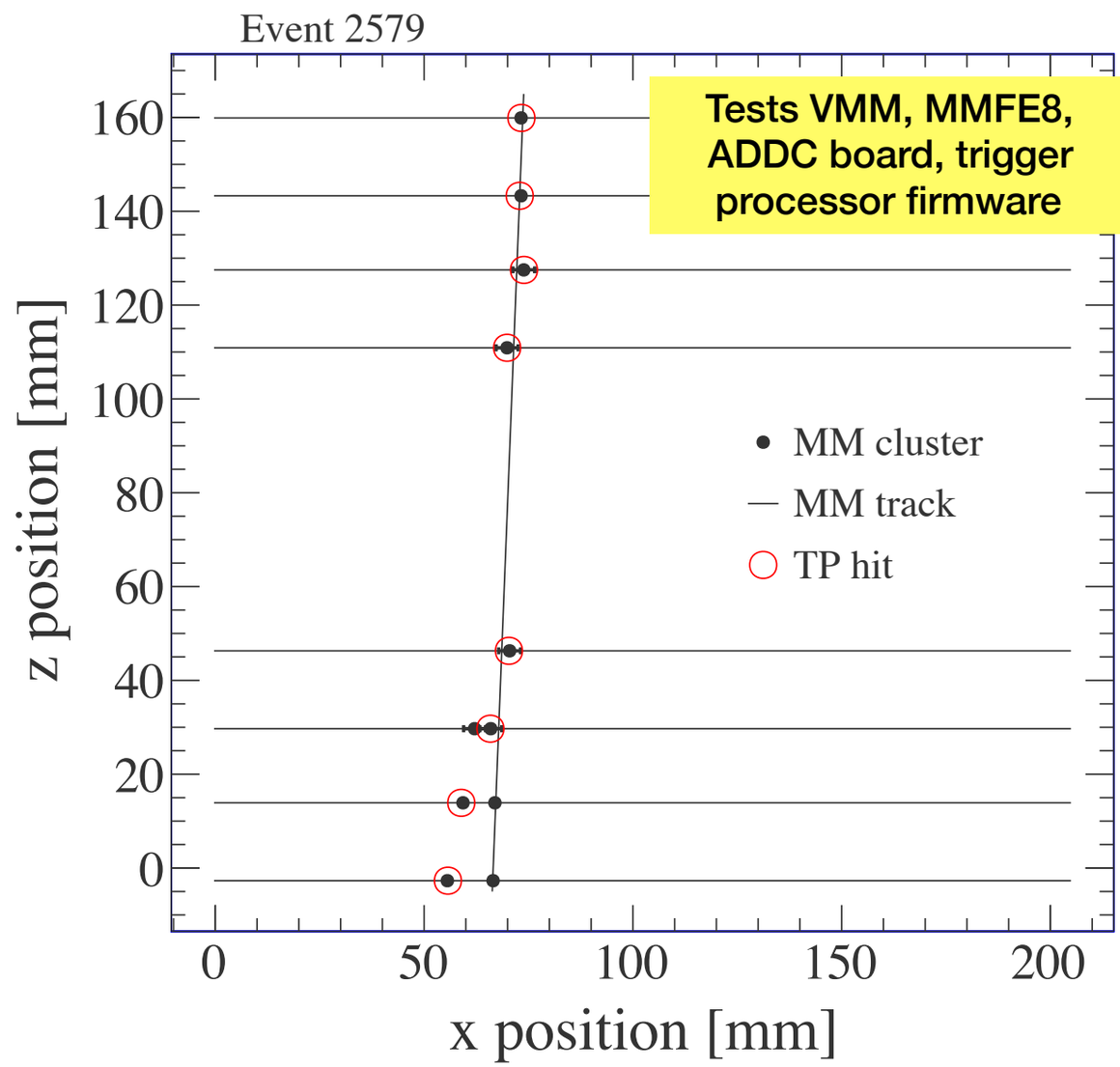


Sep 2017 cosmic track with full prototype trigger chain

- Currently developing trigger DAQ with the final ATLAS system to test final trigger processor hardware

# STGC ELECTRONICS TESTS

Test beam - tests of pFEB and sFEB prototypes with VMM, TDS

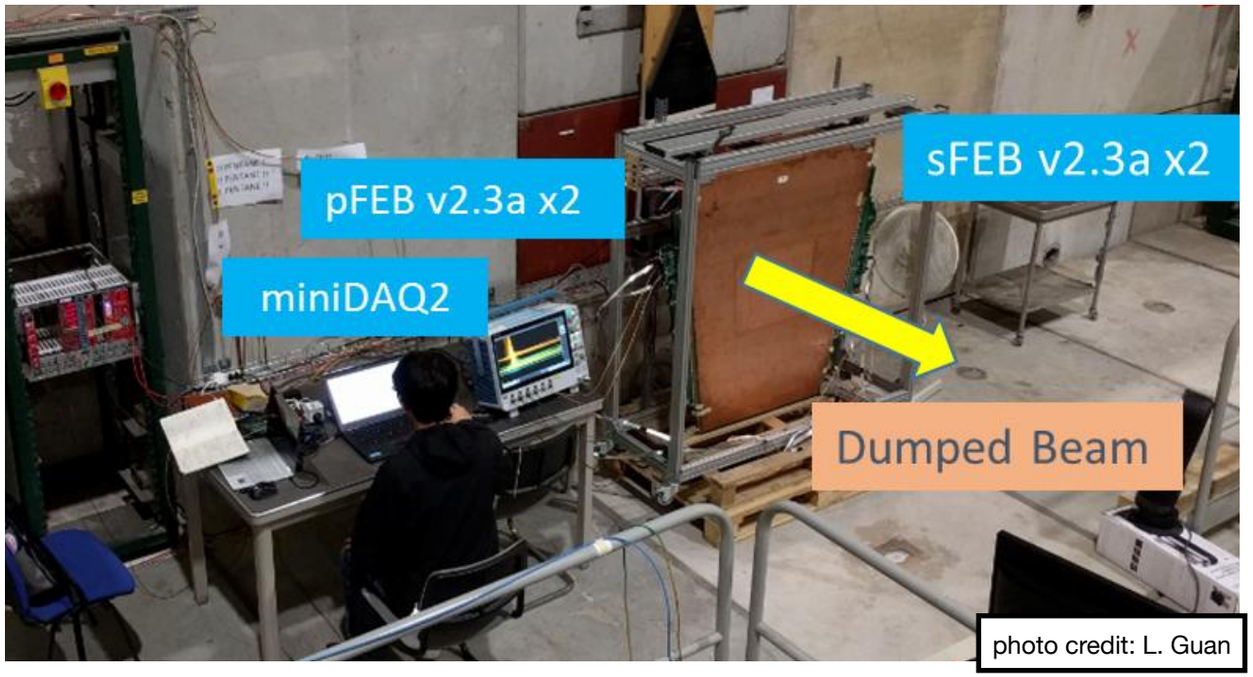


- sTGC detector efficiencies, charge distributions, resolutions, were also measured in a test beam

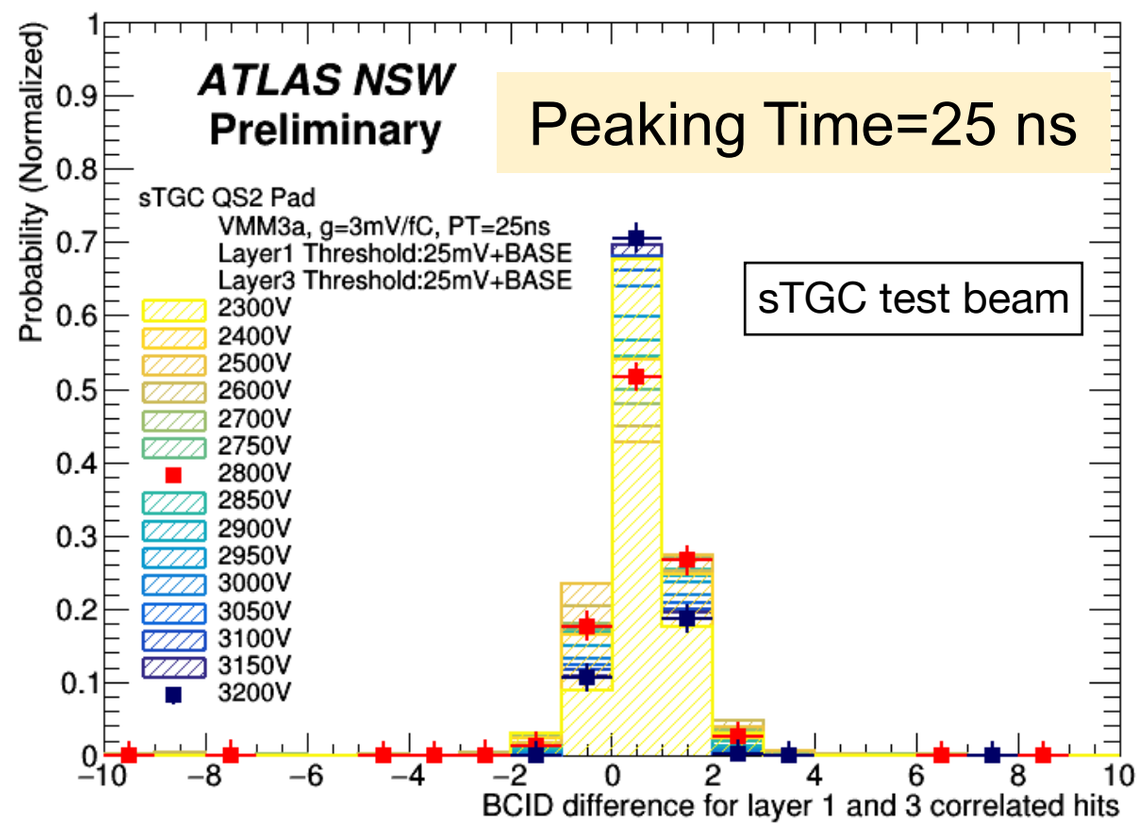


- Coincidences between two pads was demonstrated using **pad Frontend Board** prototype with **VMM**, **TDS**

# STGC ELECTRONICS TESTS

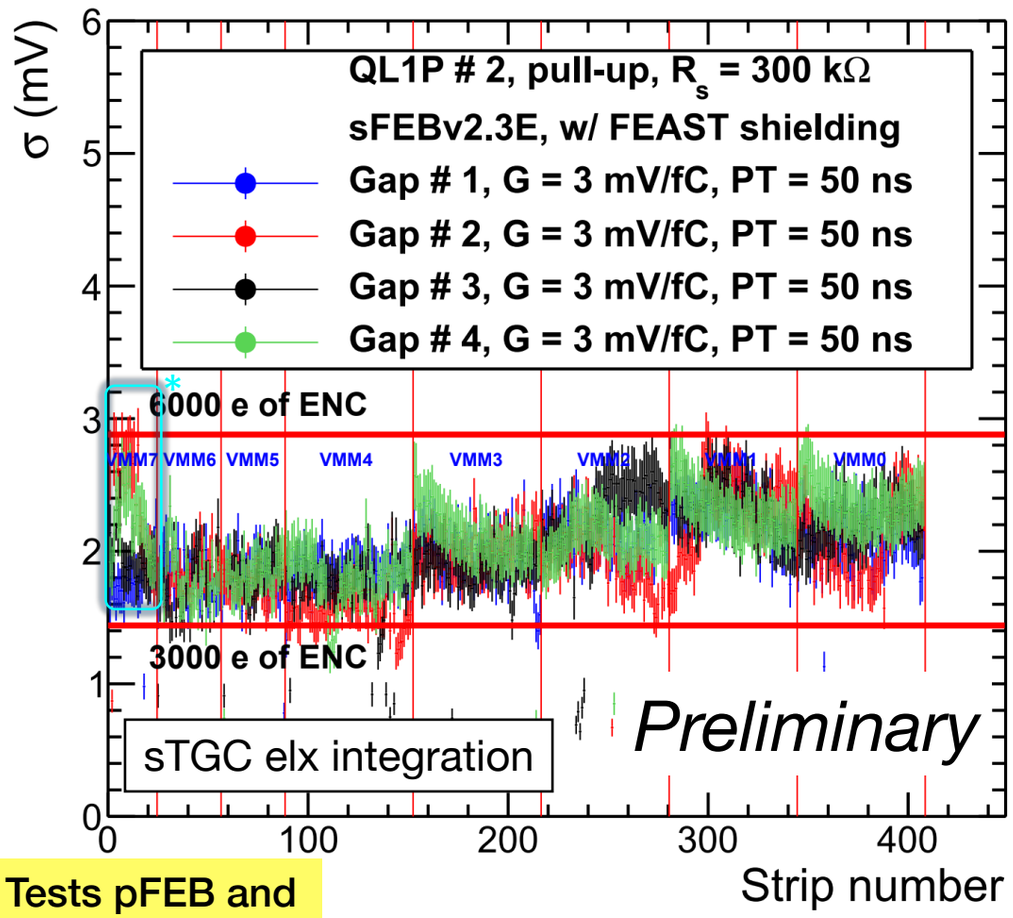


Tests pFEB and VMM

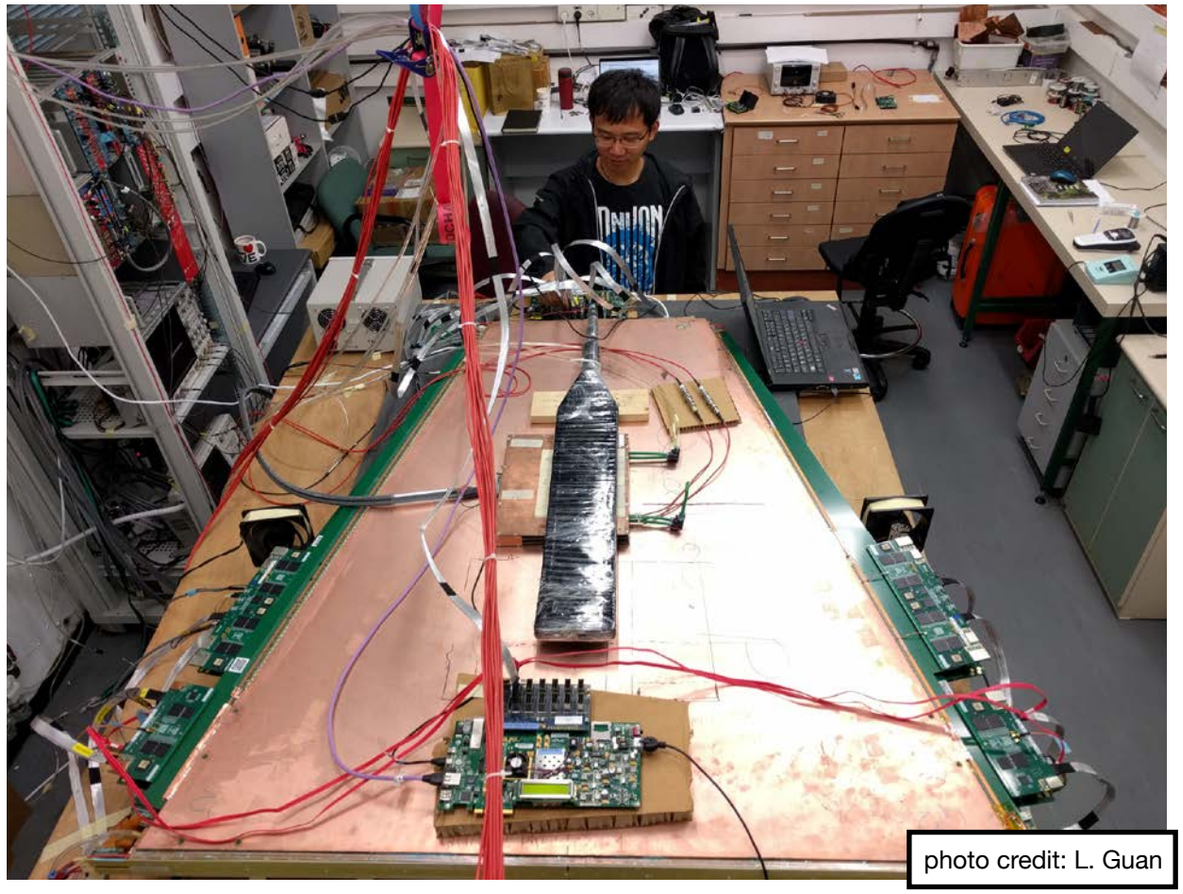


- Currently testing a large sTGC quadruplet equipped with latest **strip** and **pad Frontend Board** prototypes
- Extensive noise tests conducted, e.g. recent tests identified and fixed noise from the on-board DC-DC converters
- Digital readout path with **VMM** and **ROC** also being tested
- **Pad trigger** firmware prototype has been completed

# SUMMARY

- NSW + NSW electronics system was designed to handle the challenges of increased instantaneous luminosity at the High Luminosity LHC
  - High radiation environment, high particle rates
- Right now is an exciting time! Integration ongoing with final chambers and electronics to confirm that the system is functional before ATLAS installation of a wheel planned in 2020
- Thank you!

# BACKUP

# SOME STGC DESIGN CHALLENGES

- **Unique sTGC challenge**
- **~45k sTGC pads, ~280k strips in the entire NSW**
- **Need fine strip granularity without huge amounts of trigger data to process**
  - MM sends address of first strip hit in a VMM (strip pitch ~425-450 microns, but 1 VMM covers ~2.7 cm)
  - sTGC pads cover 4+ cm, sTGC strip pitch 3.2 mm
- *Solution:* select which strip trigger signals should be processed using pad signals
- **Basis of electronics design**
- using pads to filter which strips are read out reduces  data rate by ~ 60-100x

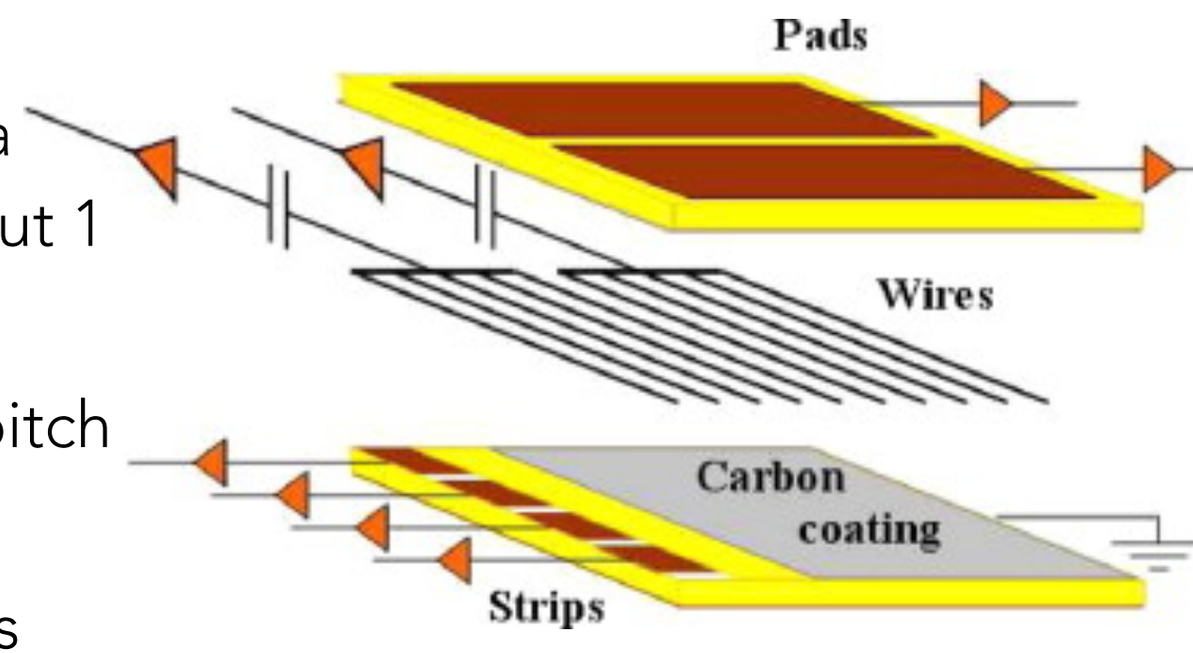

# STGC TRIGGER PATH

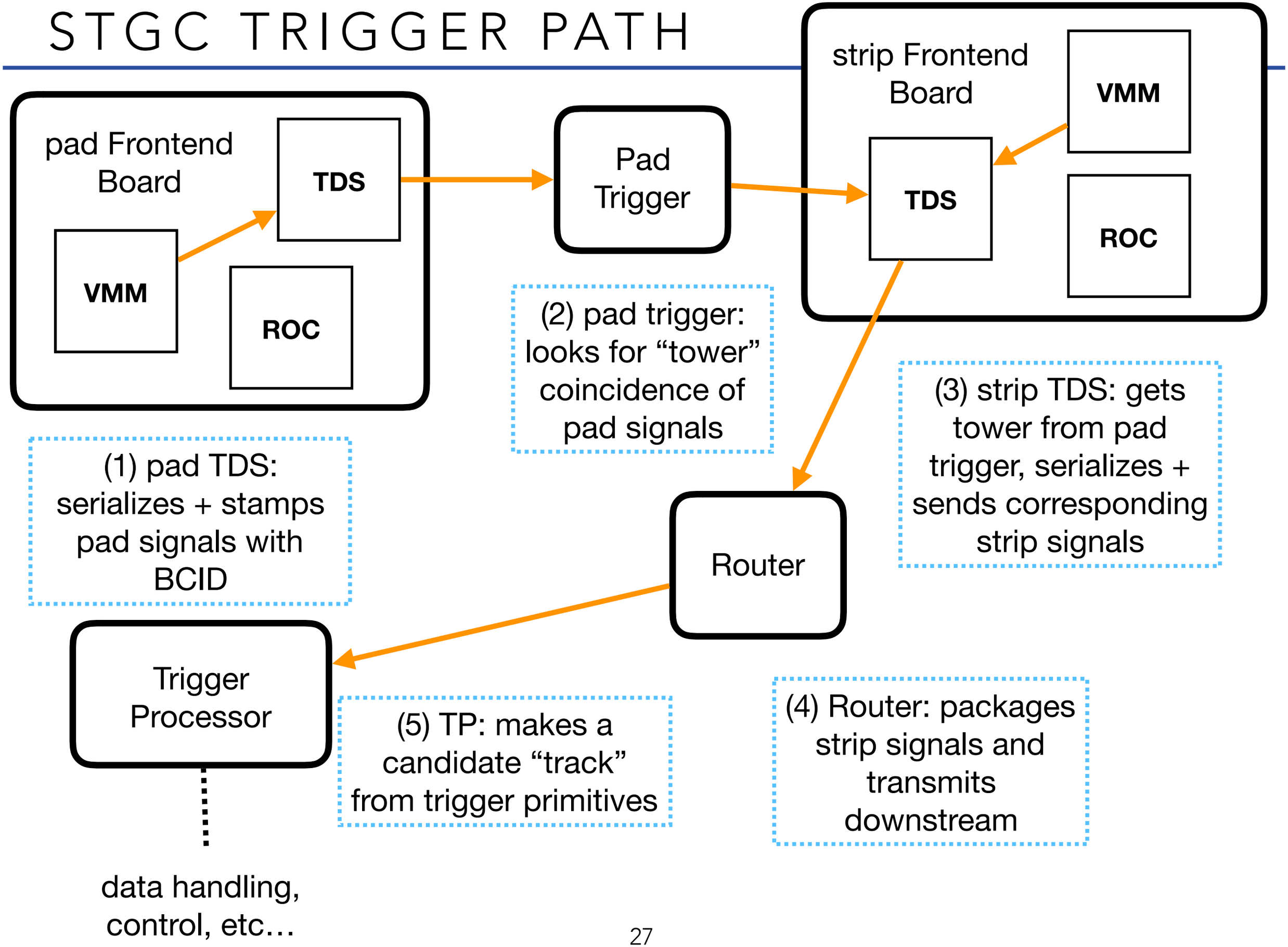

# MICROMEGAS ELECTRONICS

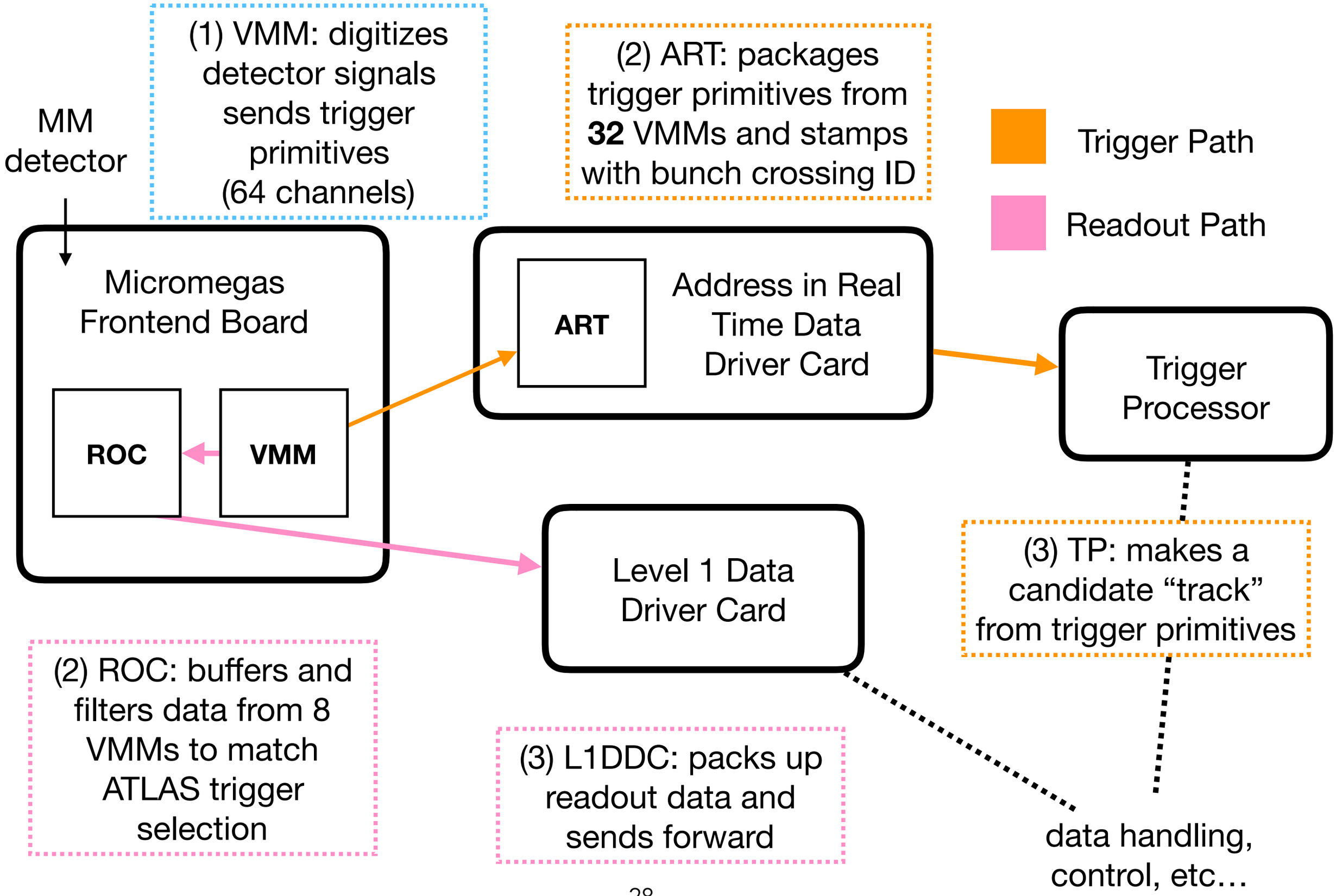

# NSW ELECTRONICS DESIGN

1. **2+ million** MM strips need to be read out, **~45k** sTGC pads, **~280k** strips for the sTGC
2. Radiation intensive environment
   - Total Ionizing Dose ~ 0.5 Mrad
3. Need low power losses, MM requires 34 kW of power, sTGC requires 14.6 kW of power
4. Everything needs to be **fast** - < 1025 ns for trigger signals to go to ATLAS "Sector Logic"
5. Reuse as many electronics as possible between sTGC and MM

# SPOTLIGHT: VMM FRONT-END ASIC

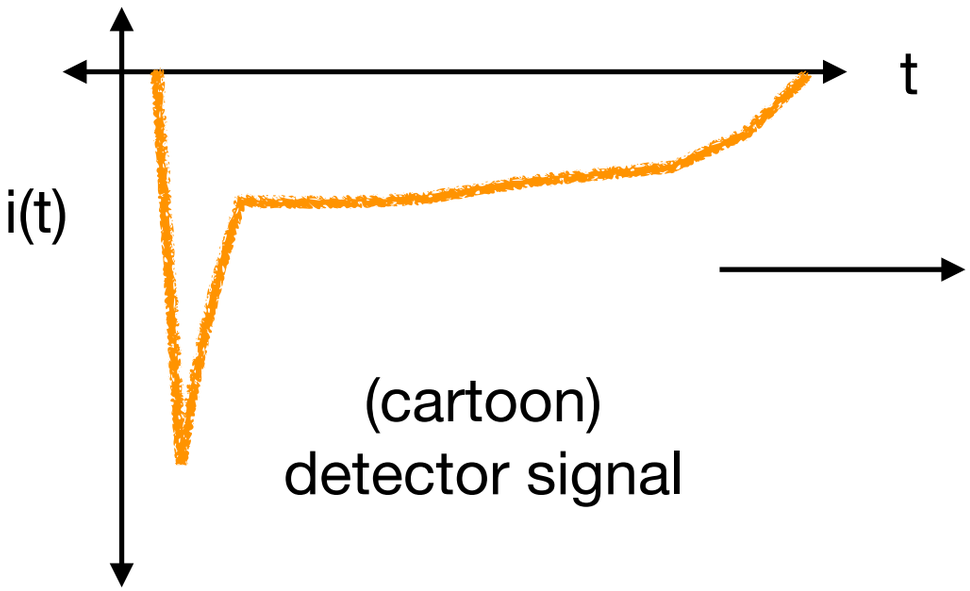


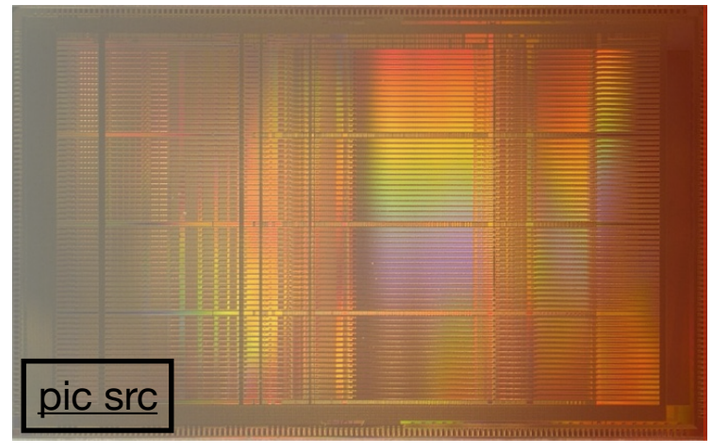


- **64** input channels
- measures **time** and **charge** of signal
- provides fast trigger signals
- used for both MM and sTGC
- radiation hard CMOS technology

Readout path

- 8-bit fine time information
- 10-bit charge information
- BCID
- channel

Trigger path

- MM trigger hit: channel address of first strip over threshold
- Pad trigger signal: pulse for Time over Threshold (ToT)
- Strip trigger signal: 6-bit channel peak value

ASIC

# ROC, ART, TDS

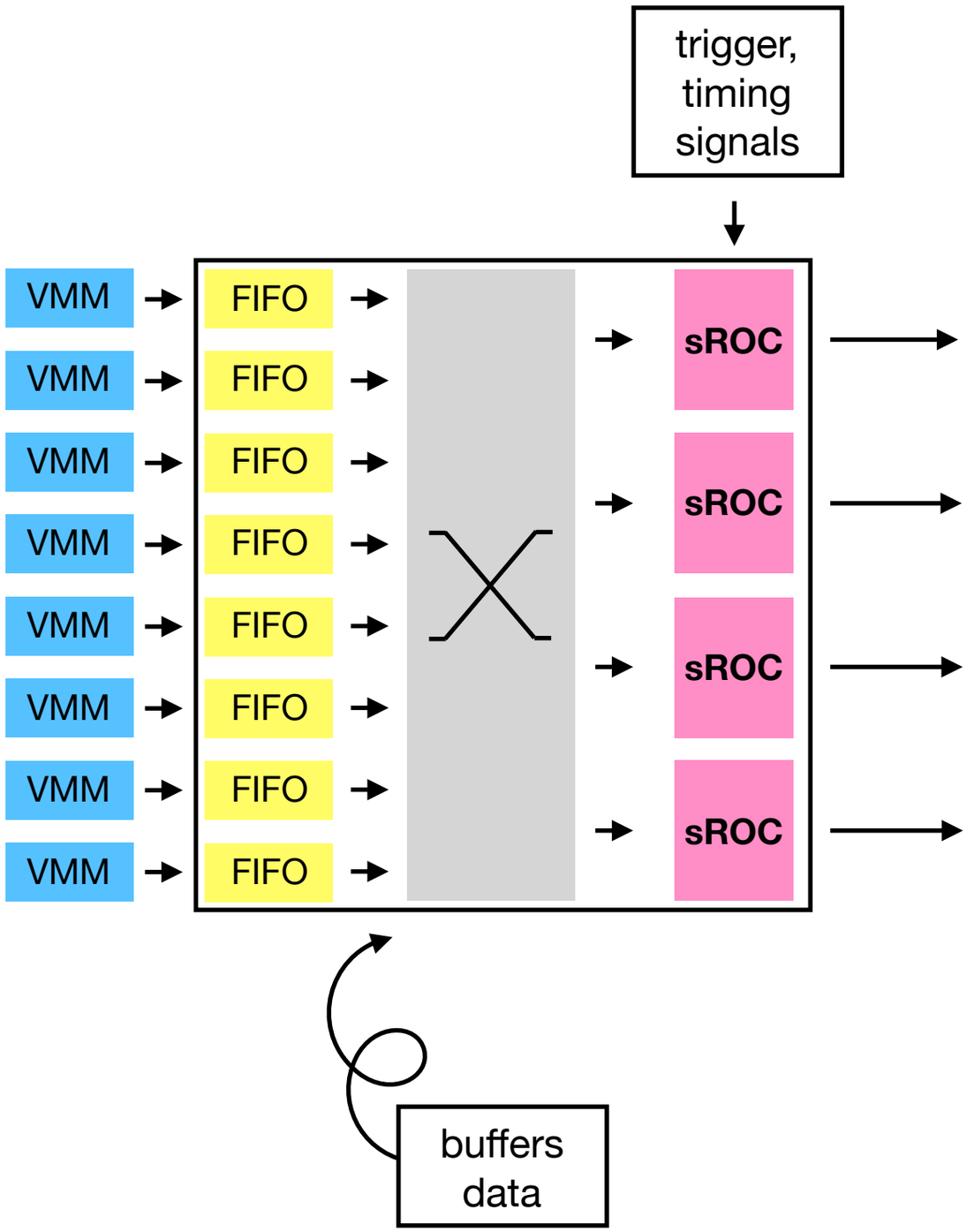


**Readout Controller (ROC)**
looks for hits matching a desired BCID + packages the hits
transmits at ~ 320 Mb/s

**Address In Real Time (ART)**
deserializes VMM MM trigger hits
stamps them with the BCID

**Trigger Data Serializer (TDS)**
serializes VMM data and
matches pads and strips

ASIC