Optical Data Transmission for Semiconductor Trackers

K.K. Gan
The Ohio State University

December 13, 2017

Outline

- Introduction
- Results from latest developments
- Summary

Use of VCSEL Arrays in HEP

- Large volume of data from semiconductor trackers at HL-LHC requires use of VCSEL array due to space constraint
  - 20,000 data links operating at 5 Gb/s for ATLAS pixel detector
  - 4 and 12-channel VCSEL arrays are compact solutions
    - 250 μm between two VCSELs (3 mm width for 12 channels)
- Arrays are widely used in off-detector (no radiation) data transmission
- First on-detector implementation is in pixel detector of ATLAS
- Optical links of a pixel detector must be located at a distance from the detector due to intense radiation
  - use of skinny cables for data transmission to reduce material limit the bandwidth of the data link

ATLAS ITK-Pixel Opto-Board Concept

- opto-board concept used in 1st and 2nd generation pixel opto-links
- candidate for deployment in the ATLAS ITK-Pixel
  - Keep opto-pack for mounting 12-channel VCSEL array
  - Keep copper backed PCB for heat removal
  - Keep MTP connector for easy mating
  - No lenses/mirrors used to turn the light

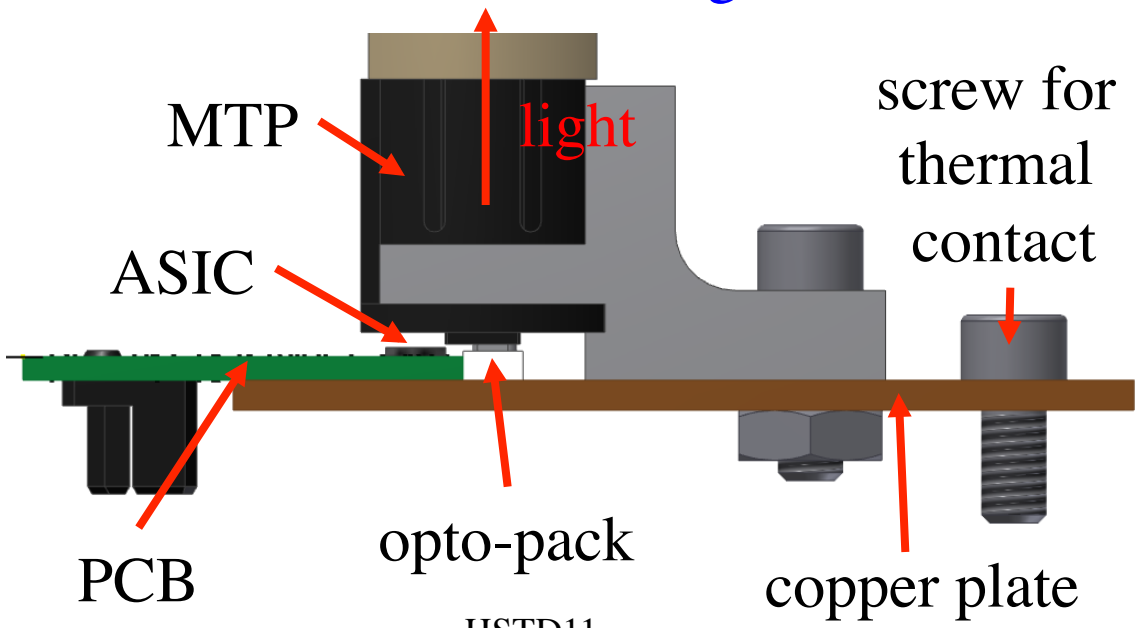

Opto-Pack for ATLAS ITK-Pixel

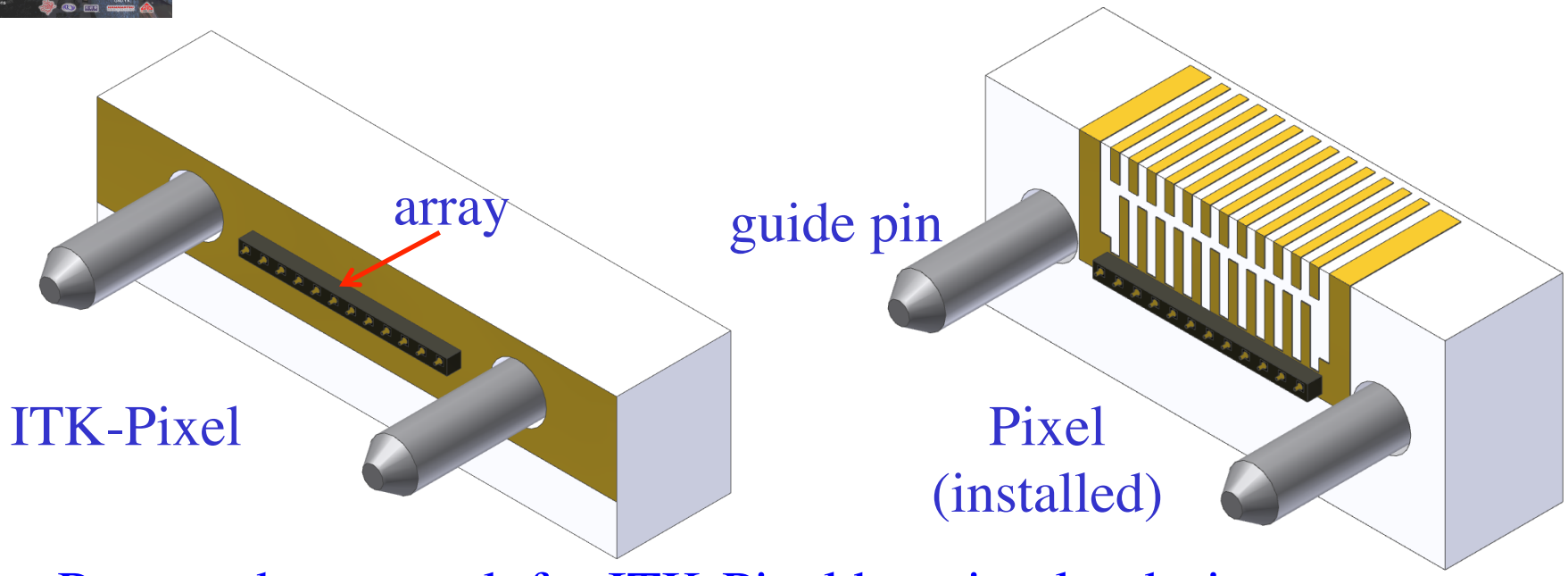

- Proposed opto-pack for ITK-Pixel has simpler design
  - continue to use BeO as substrate for heat management
- experience in building large quantity of opto-packs
  - fabricated 1,200 opto-packs for pixel opto-boards
  - fabricating 300 PIN opto-packs for off-detector opto-receivers
  - equivalent to 18,000 channels

ITK-Pixel Opto-Board

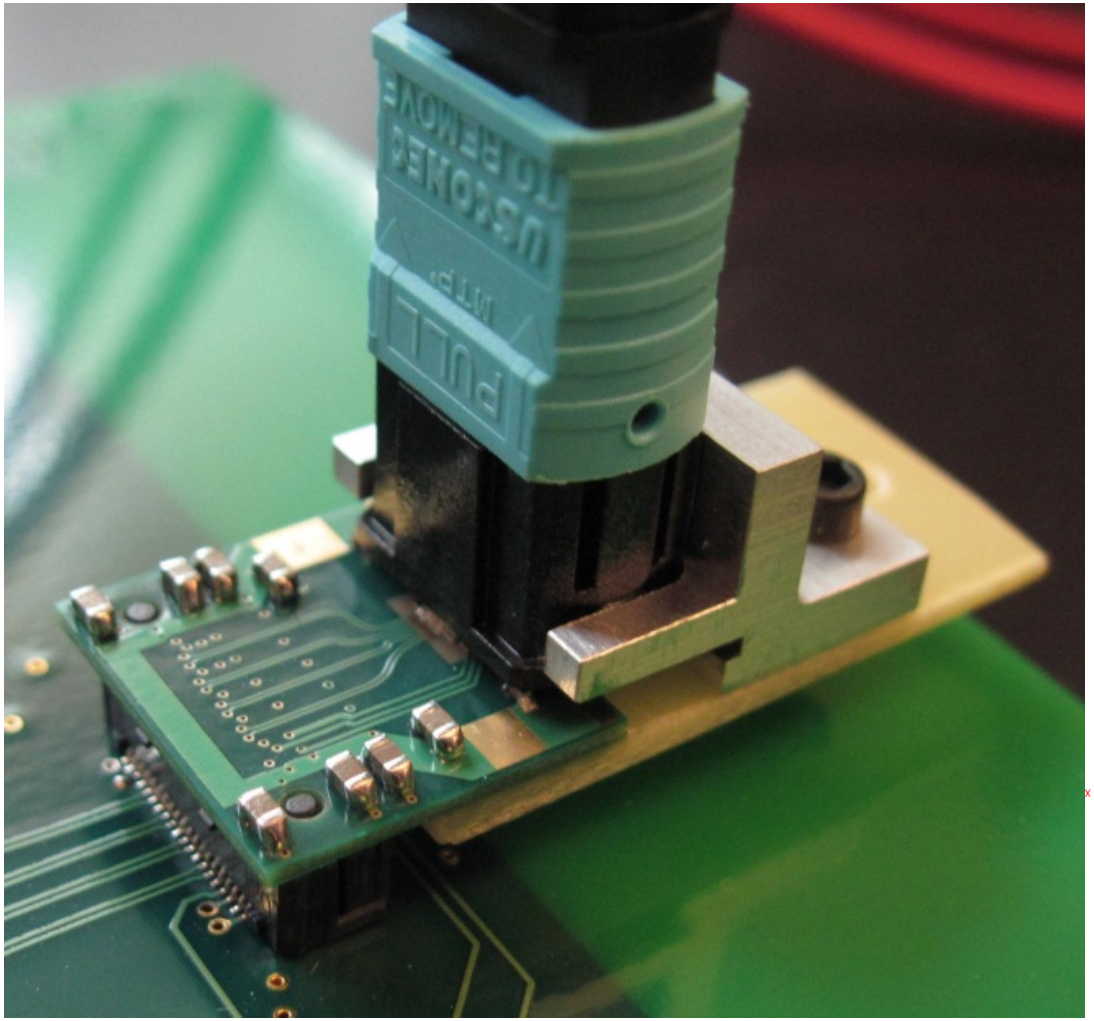

Connector secured to opto-board with screws instead of epoxy in current opto-board

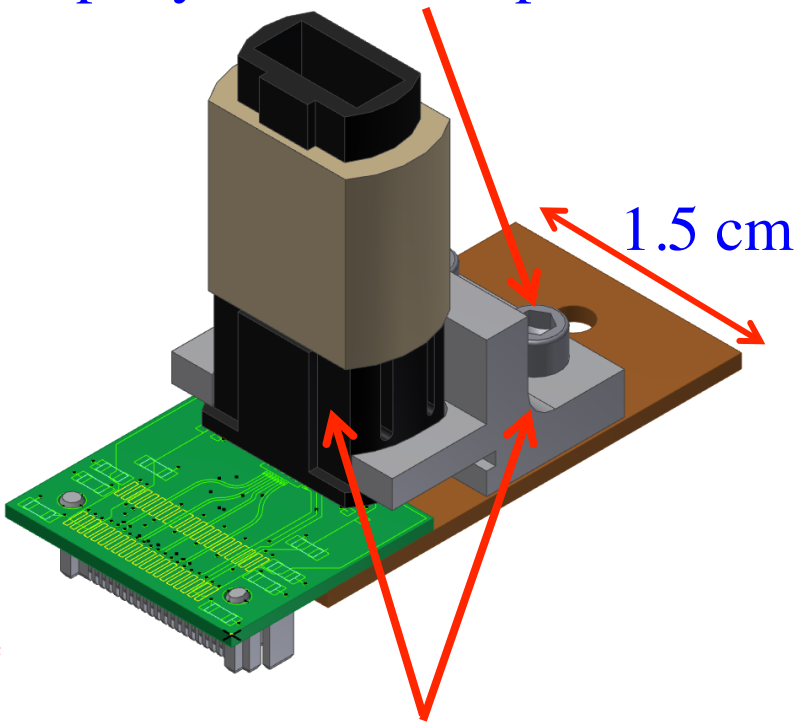

Will be fabricated as one piece with mold injection to reduce the width

Post Irradiation Results – 5 Gb/s

- All channels operational after irradiation with 24 GeV protons
- Optical amplitude reduced from 2.07 mW to 1.19 mW
  - consistent with power loss seen during irradiation
- Performance of the array driver/VCSEL combination at 5 Gb/s is acceptable

13 Mrad

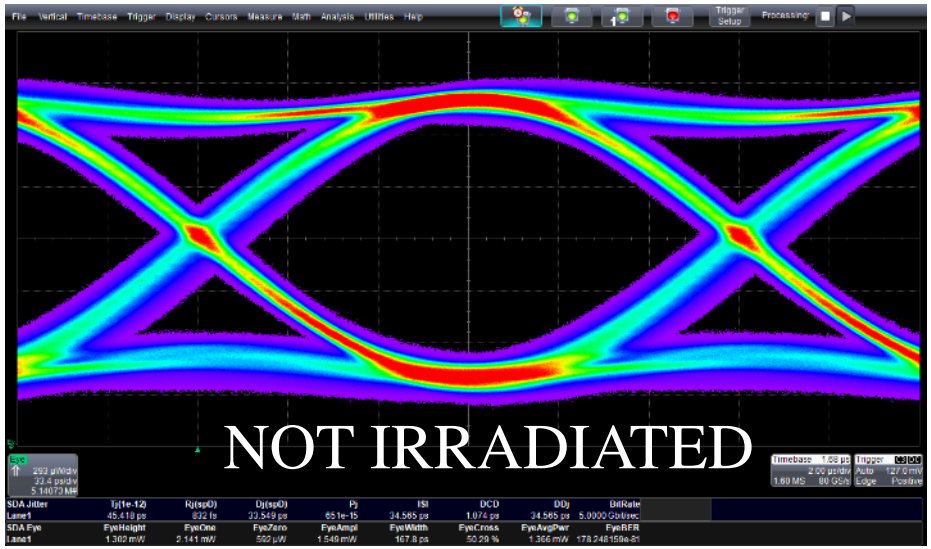

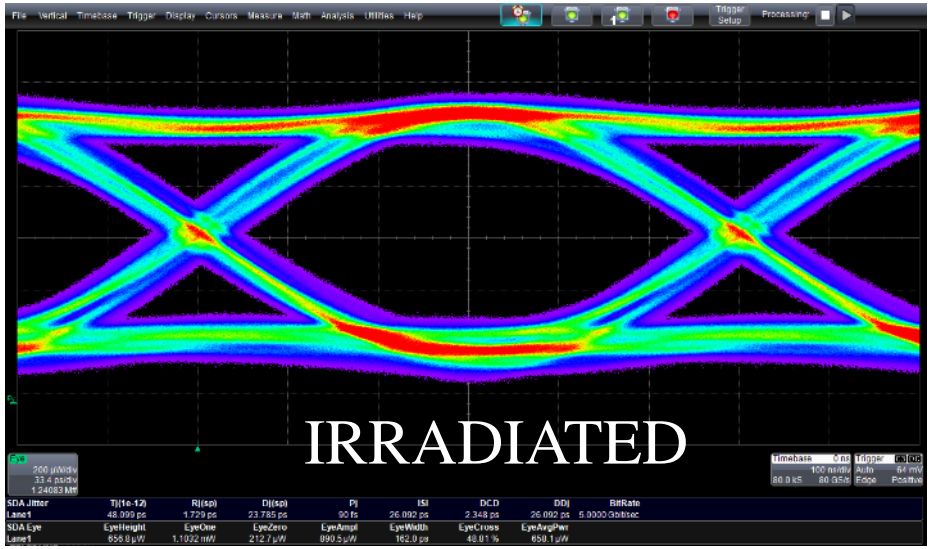

Signal Equalization

- ATLAS ITK-Pixel plans to transmit 5 Gb/s data via 5.5 m of skinny cables to optical modules
- signal will be badly distorted
  due to attenuation of high frequency components
- must apply signal equalization to restore high frequency response
- Ohio State/Siegen currently designing VCSEL array driver with equalization circuit

4-tap CTLE Equalizer

- Each successive stage increases gain for high-frequency components
  - ⇨ Equalize the response across all frequencies

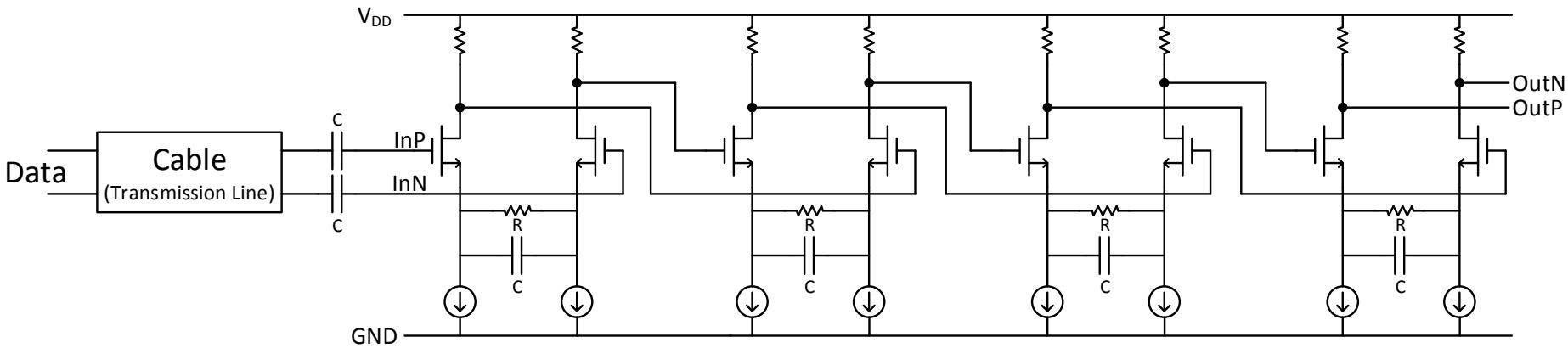

CTLE: continuous time linear equalization

Signal at 4 Taps (Preliminary)

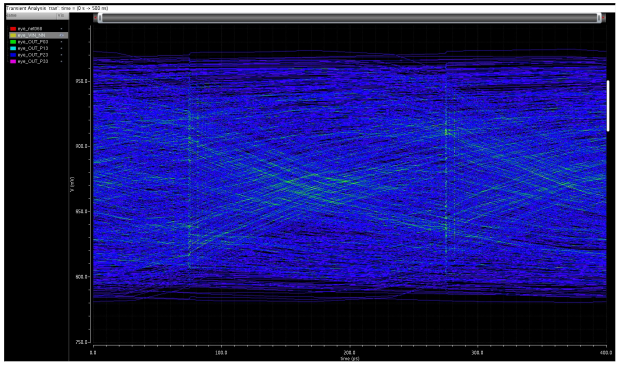

End of cable

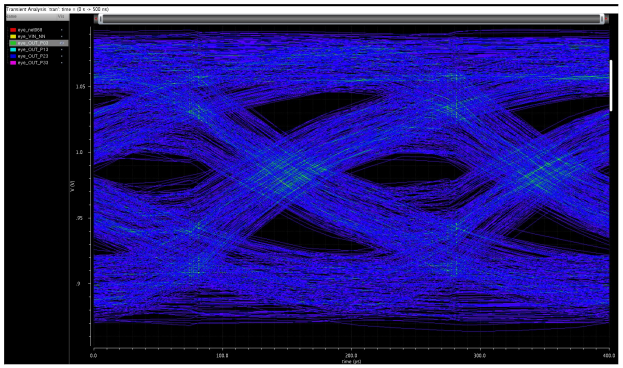

Tap 1

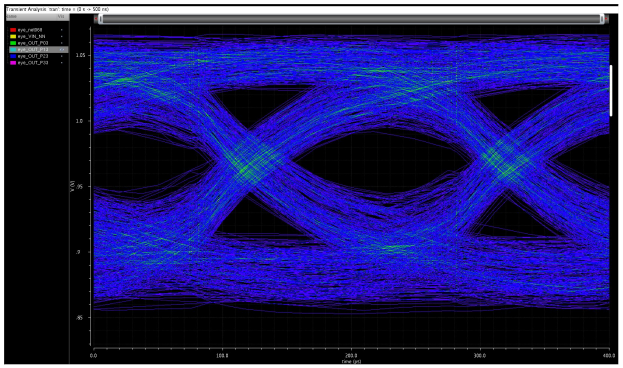

Tap 2

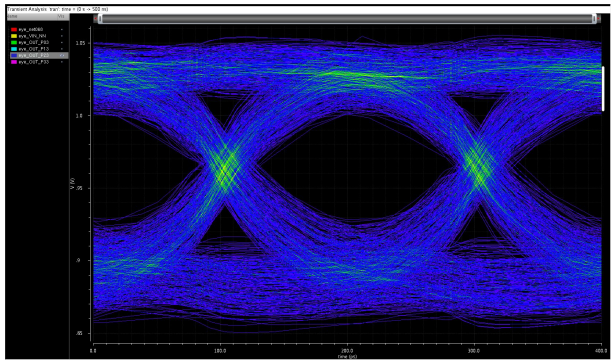

Tap 3

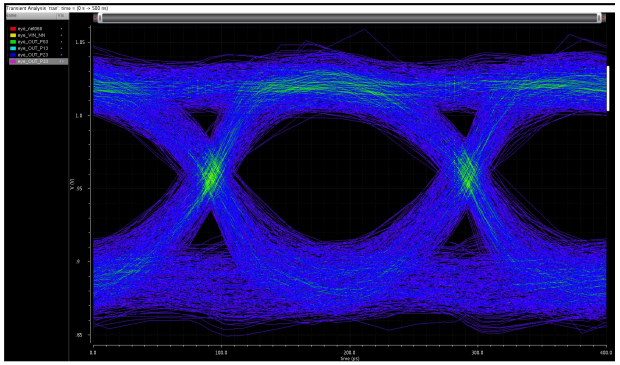

Tap 4

Versatile Link+

- Front-end to back-end link targeting inner detector use at HL-LHC
  - 1 MGy, $3x10^{15}$ n/cm^2
  - -35 to +60 °C
  - 5 or 10 Gb/s upstream (out of detector)
  - 2.5 Gb/s downstream
  - Collaboration: CERN, Oxford, Academia Sinica, SMU, FNAL

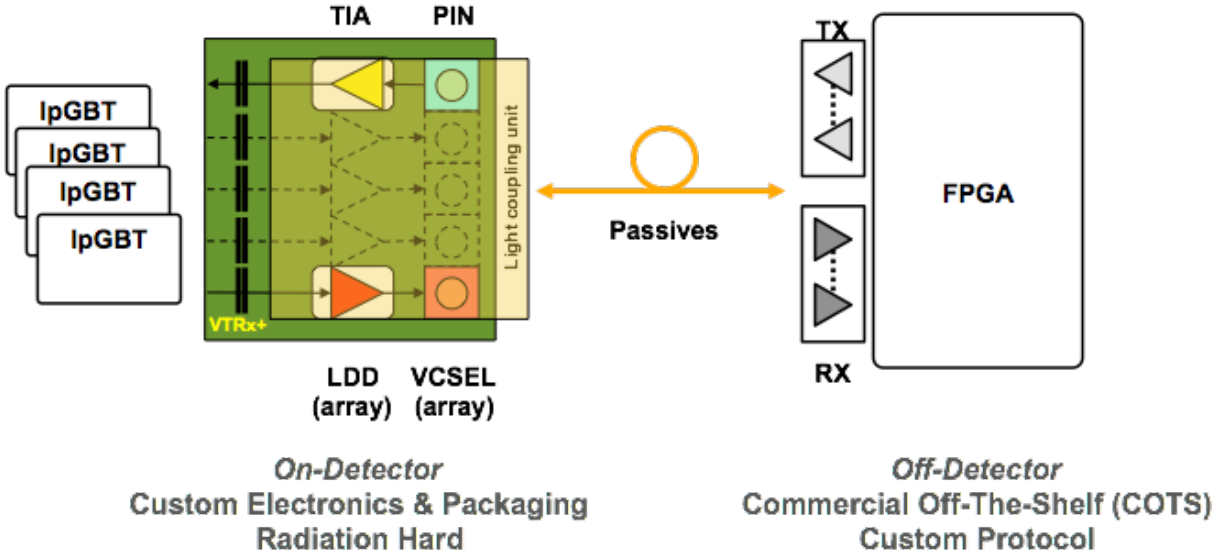

J. Troska

Versatile Link+ Results

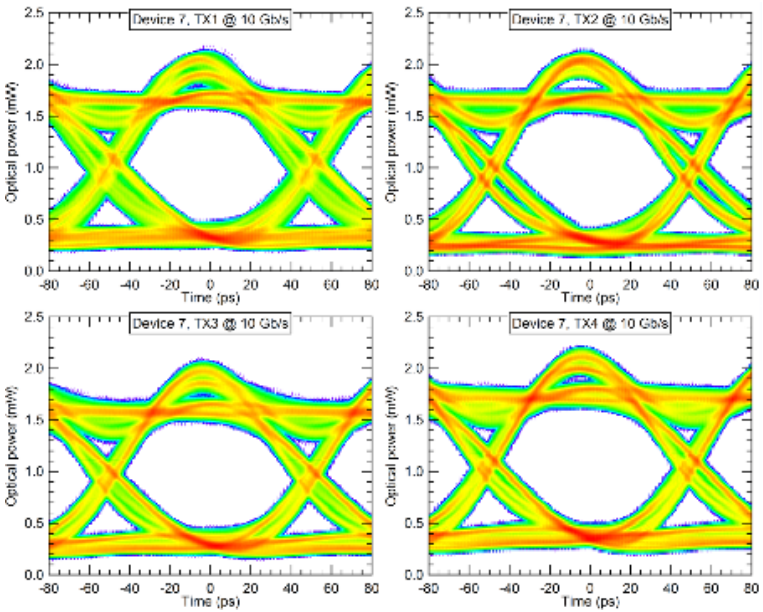

Tx

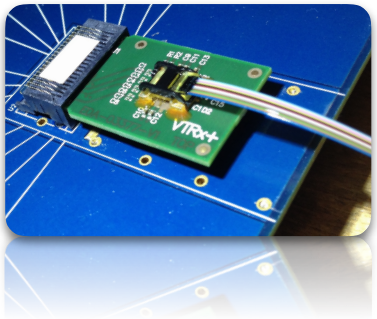

Rx

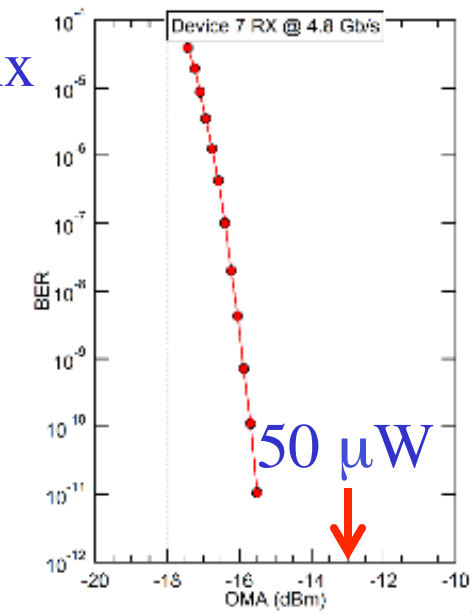

- Tx: 10 Gb/s operation with good coupling efficiency
- Rx: operating with good margin and no interference with Tx

Versatile Link+

- Pro: reduce cost from large volume production
- Con: 4 Tx channels + 1 Rx channel in 12-channel fiber with attached pigtail is not a commercial standard

⇨ messy/costly signal rerouting to off-detector 12-channel COTS

Optical Package Candidates

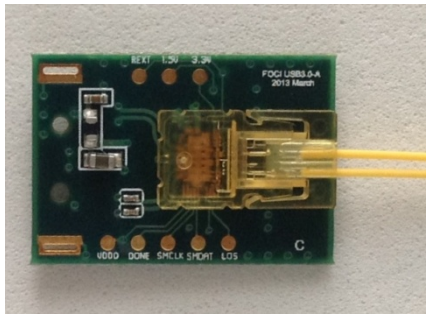

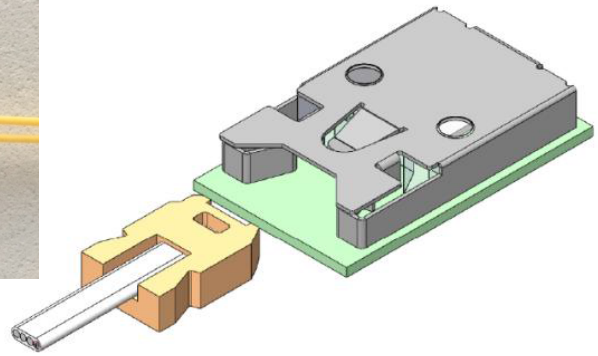

FOCI

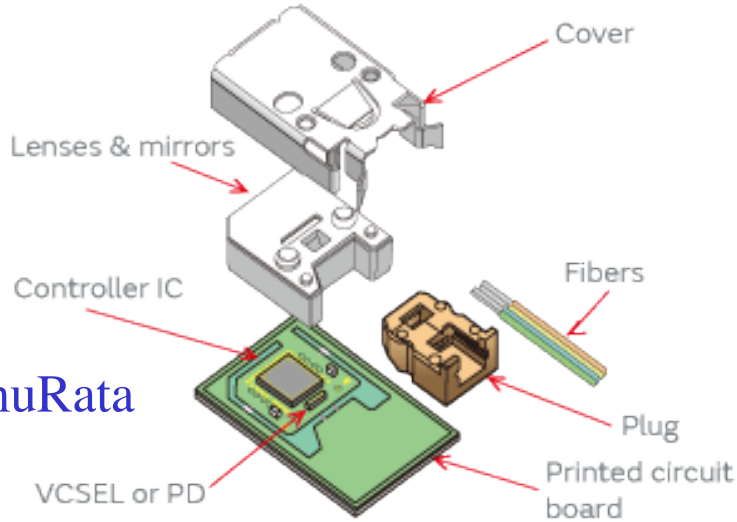

muRata

- Two optical packages of general interest tested by Suen Hou (Academic Sinica)
- Challenge: convince the vendors to produce packages for trackers

Summary

- semiconductor trackers require low-mass optical links operating at high speed
  - multiple solutions currently being developed
- pixel detectors require data to be transmitted on skinny cables for up to 5.5 m before conversion to optical transmission
  - ⇨ equalization circuit currently being designed