Fretting Resistance of Insulation on the ITER Magnet Feeder Busbars

N Clayton, M Crouchen, D Evans, C-Y Gung, M Su, A Devred and R. Piccin

Outline

- Brief overview of the feeders
- Insulation specification of the Feeders
- Aims of Test & Overview of Testing Apparatus and Specimen
- Results -
- Conclusions

Brief Overview of Feeders

- 31 separate ‘feeders’ to supply the magnets with electrical current, cryogens and instrumentation

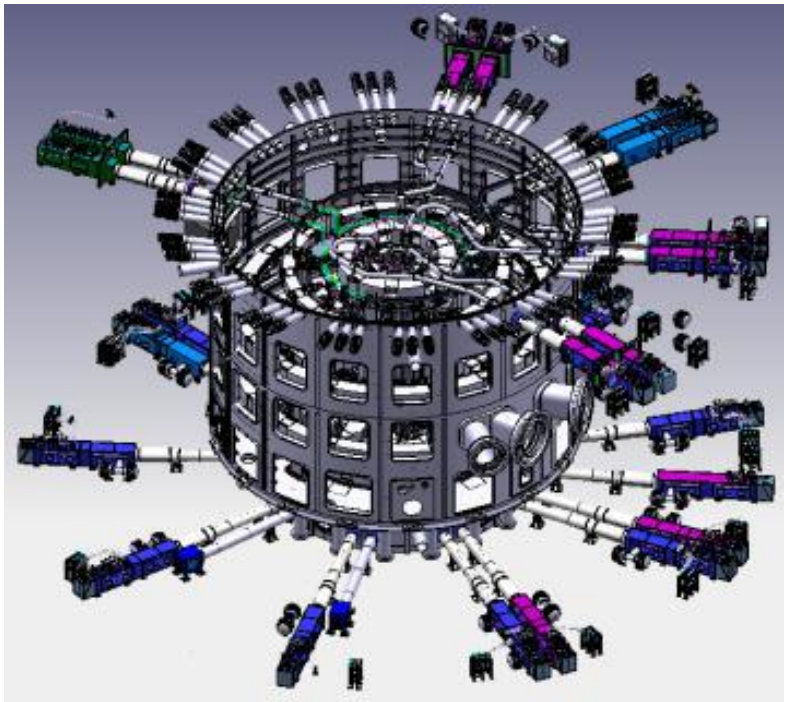

- Length from 20 m to 30 m.
- Weight ~50 tonnes.
- Current carried by superconducting bus bars with lap joints. HTS current leads for transition to room temperature bus bar.

Feeder Current Carrying Elements

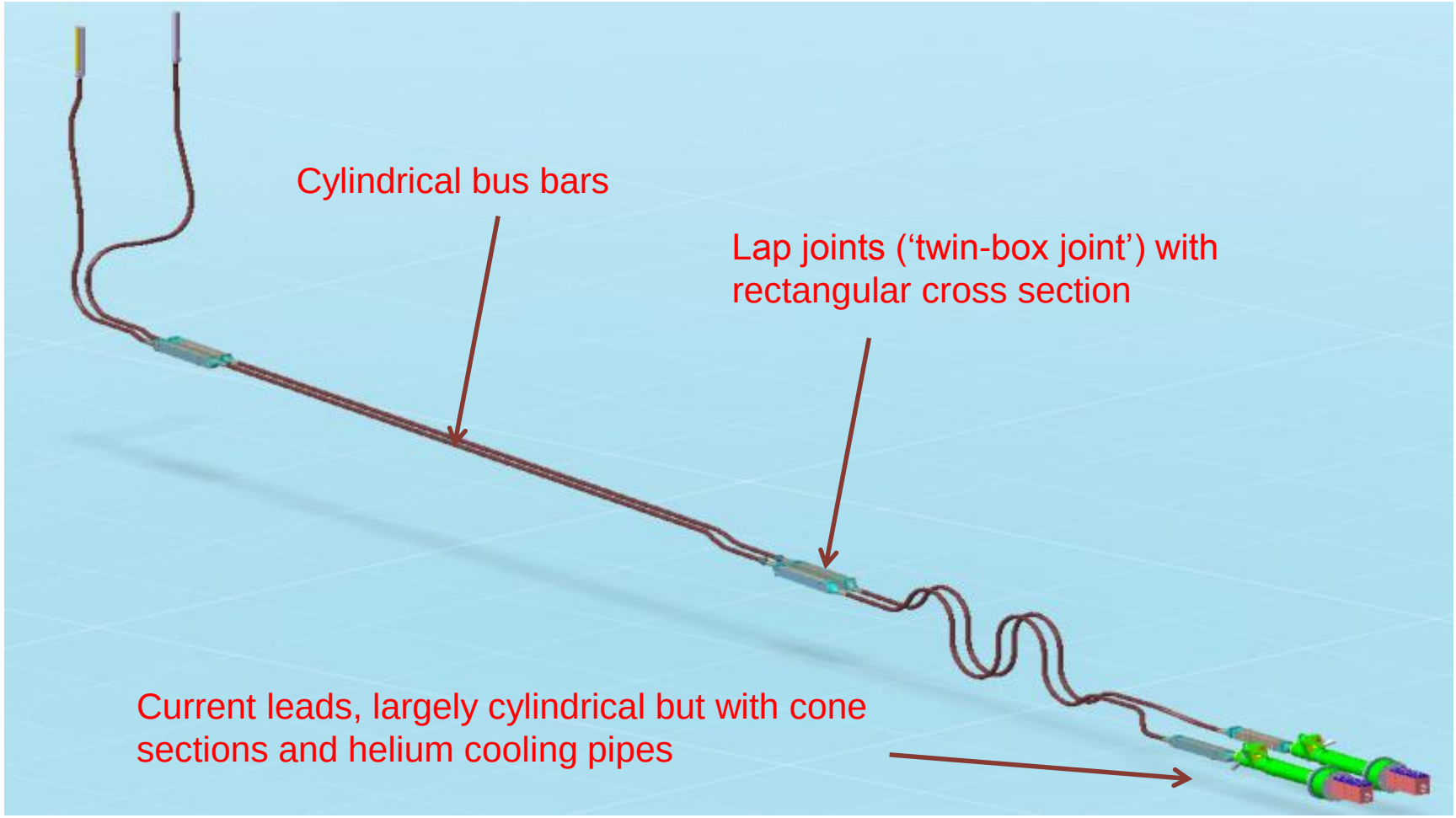

Feeder and Insulation Specifications

- Feeder bus bars, joints and current lead cooled by a forced flow of helium at 4 K, in vacuum
- The total length of each busbar + joints is ~ 20 m & 44 or 22 mm dia. The bus bars shaped before applying insulation
- Insulation to 30 kV including Paschen test
- Insulation is 9 half lapped layers of 0.25 mm S-glass pre-preg & and 0.025 mm polyimide plus one half-lapped glass layer as at start and finish of insulation
- Conducting veil included as a ground screen before wrapping final two pre-preg layers
- 2 mm radial clearance between clamps and busbar

Aims of Test

Aim: To simulate operational conditions of insulation and assess insulation performance:

- Insulated bus bar supported in clamps
- During cool-down, the bus bar will slide in the clamps by up to 30 mm - ITER is designed for 100 cool-downs
- In operation, the bus bar will slide up to 5 mm in the clamps at each of design 30,000 pulses
- The machine is designed for 30000 pulses
- During operation a large Lorentz force on the bus bar (15kN per clamp) is reacted through the clamps

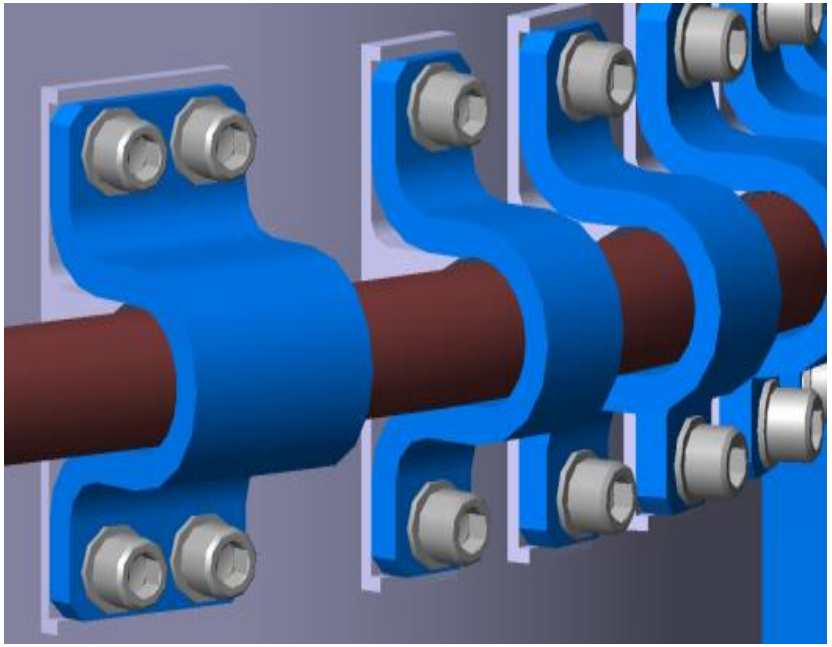

Overview of Test Apparatus

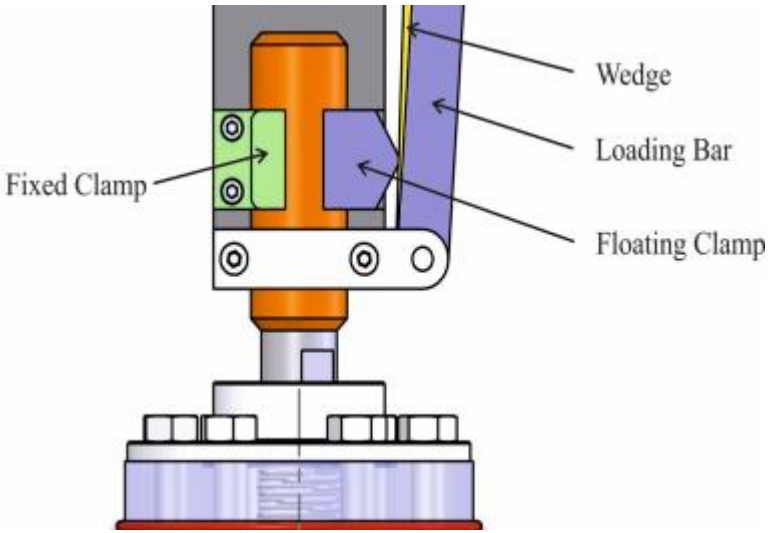

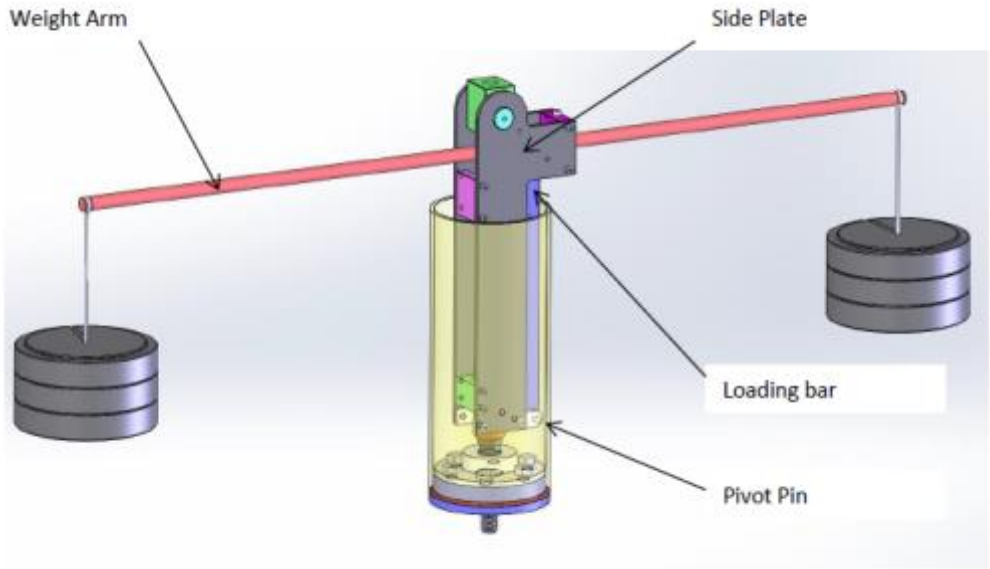

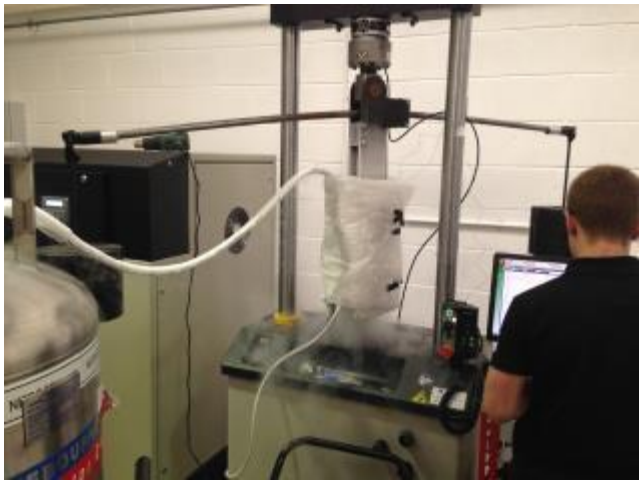

Specimen for Test

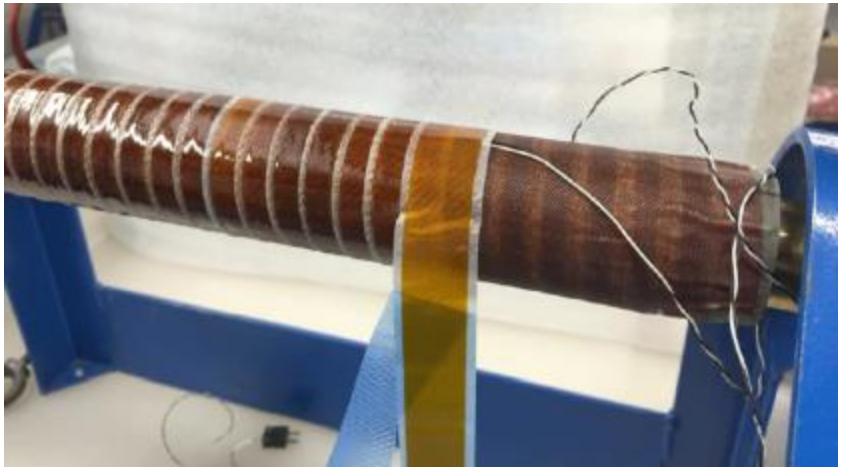

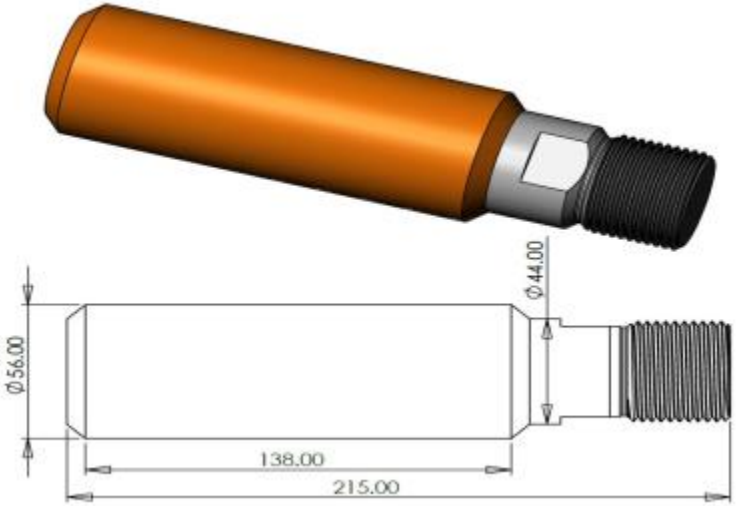

- *Specimen 1 after test*

Results

Results are considered under three separate headings:

- (a) Wear on insulation
- (b) Estimate of Friction Factor
- (c) Electrical Characteristics

Specimens After Test

Specimen #1 and clamp after 60’000 cycles

Specimen #2 and clamp after 60’000 cycles
Note presence of wrinkle

Specimen #3 and clamp after 60’000 cycles

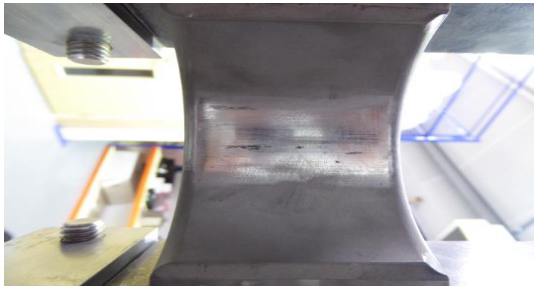

Typical Test Results – Specimen # 3

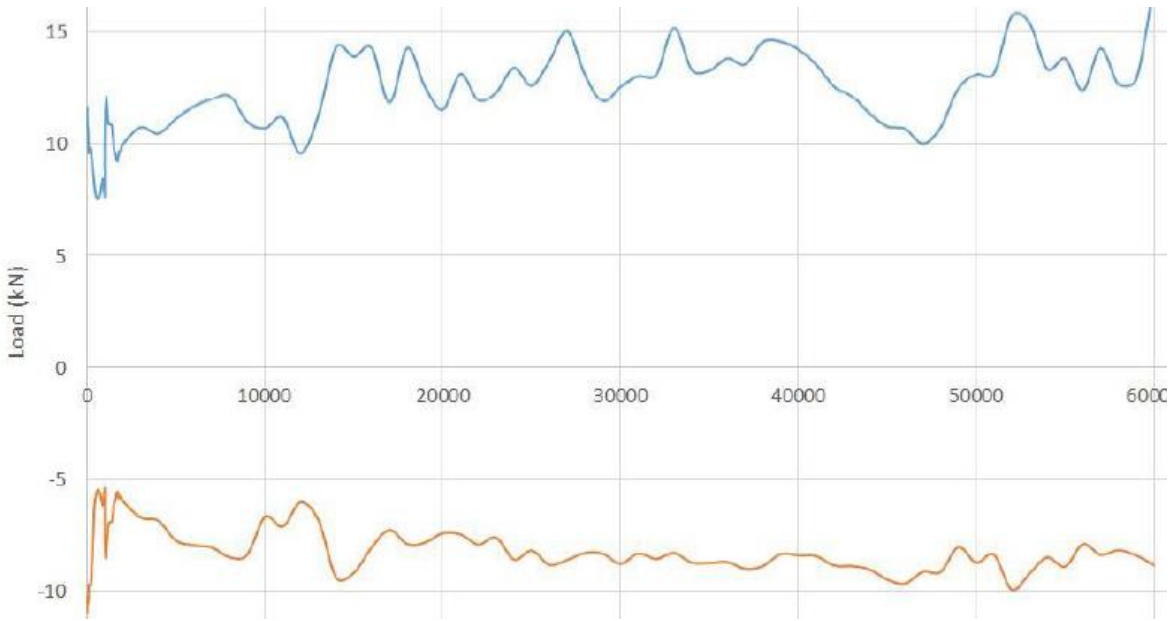

The magnitude of the up-stroke force is generally larger than the down-stroke force – reason is not completely clear.

The axial forces are increasing slightly with cycle number

Average of up-stroke and downs-stroke coefficient of friction (COF) ranges from 0.2 to 0.4.

Wear on insulation

Wear is confined to pre-preg capping layers

Variation in fretting results

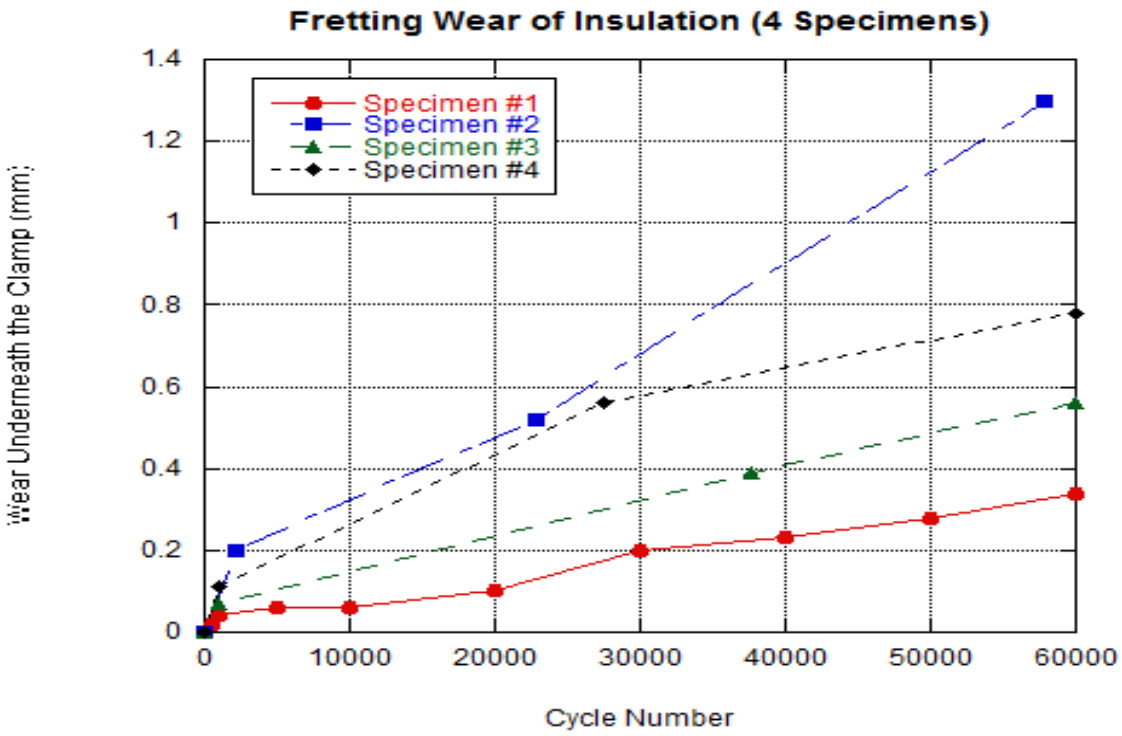

Electrical Characteristics

- Two specimens (#3 and #4 - fitted with integrated ground-screens) were evaluated before & after mechanical testing
- Resistance was measured between the steel thread and the veil ground-screen at 1 kV DC for 1 minute
- The insulation resistance of #3 was found to be 2 x 10^9 Ohms
- #4 was found to be 1.8 x 10^9 Ohms exceeding the ITER requirements.

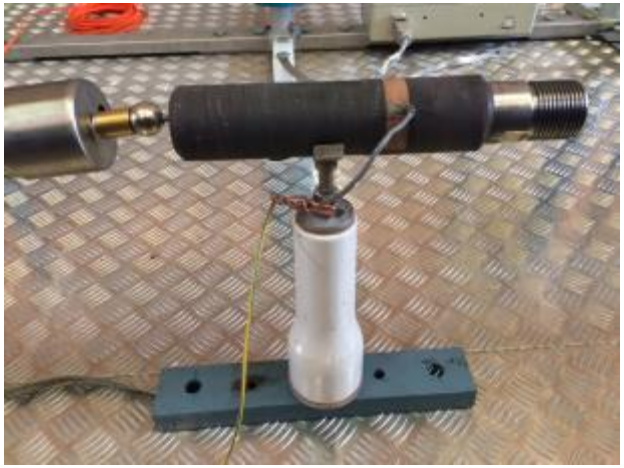

Electrical Characteristics (2)

- The specimen geometry did not permit a breakdown test
- Partial discharge measurements showed large surface discharges (>2 nC) & were limited to 10 kVrms for a period of 30 minutes
- PD signal did not increase over the duration of the test, indicating that the electrical performance of the insulation was maintained.

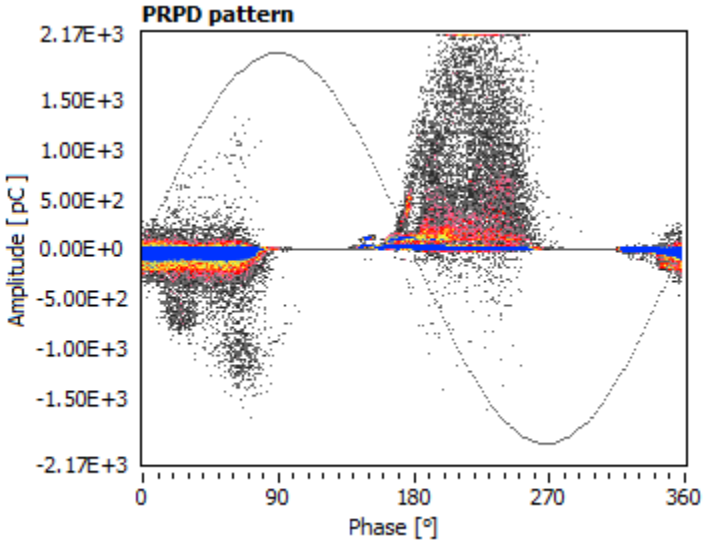

Conclusions

- A series of fretting tests on insulation specimens representing the ITER feeder busbars showed that:
- Wear varied between specimens, but was small & confined to the outer two pre-preg layers.
- High voltage insulation was intact electrically after the fretting test.
- Friction force used to derive an approximation for the coefficient of friction in the range of 0.2~0.4.

The views and opinions expressed herein do not necessarily reflect those of the ITER Organization