Design and Testing of Helium Turbines for a 500W@4.5 K Refrigerator

Turbine Teams
fubao@ipp.ac.cn

Reported by Xiaofei LU
7/10/ 2015

Content

1. Introduction of 500W/4.5K Refrigerator

The 500W/4.5K helium refrigerator has been designed for ADS (Accelerator Driven Subcritical) project of Chinese Academy of Sciences, providing the cryogenic environment for superconducting magnets' testing.

(1) Operated as refrigeration, liquefaction or mix mode.

(2) Providing supercritical helium at 5bar for forced-flow cooling.

(3) Providing 80K helium gas for 300K-80K pre-cooling.

(4) Providing 80K, 20K and 4.5K bypass streams respectively.

(5) Operated automatically in different phases, including the interlocks.

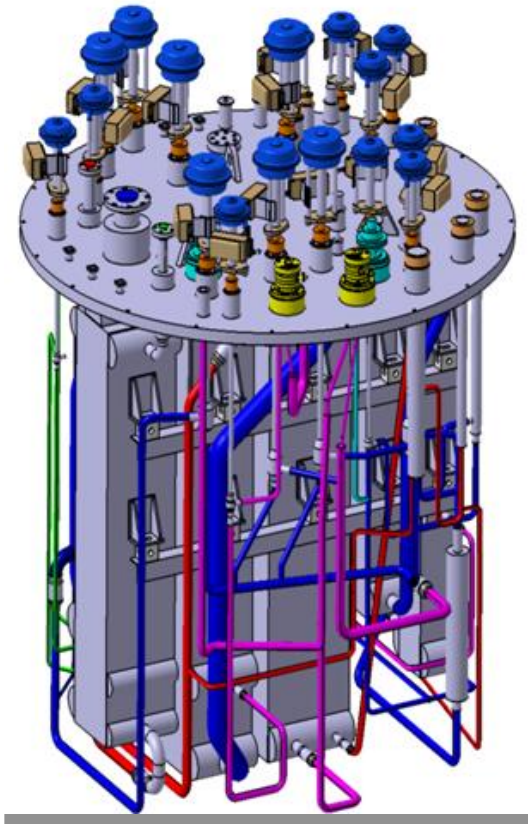

2. Design Parameters of Helium Turbines

Helium turbine is the most important part of helium refrigerator. The design of helium turbines include static gas bearing, bearing room, shaft, impeller, nozzle and diffuse.

Parameters	Turbine 1	Turbine 2
Inlet Pressure (MPa)	1.24	0.56
Inlet Temperature (K)	34.5	13.5
Outlet Pressure (MPa)	0.6	0.12
Expected Efficiency	0.63	0.65
Mass Flow Rate (g/s)	34.5	34.5

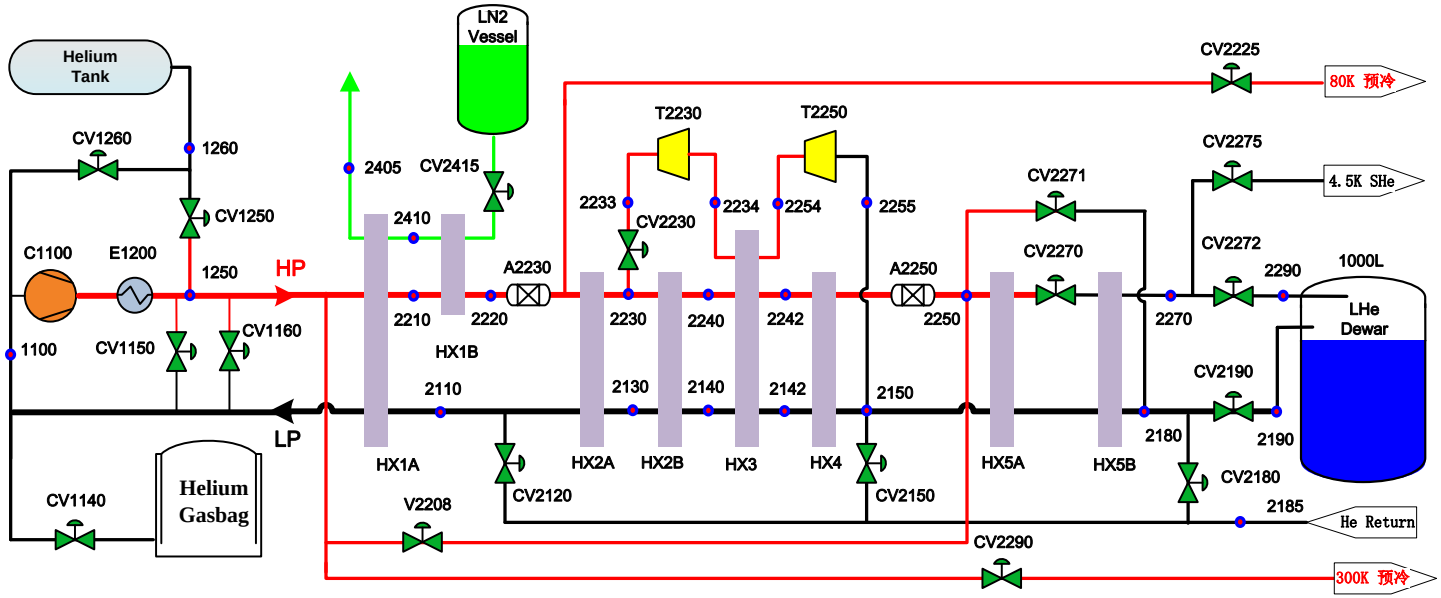

3. The Design Process and Design Results

3.1. The impeller and nozzle design

One-dimensional flow theory was used to design wheels of helium turbine. The thermodynamic parameters and configuration parameters of the wheel were obtained. Centripetal turbines with impeller of radial-axis type.

Thermodynamic parameters design results:

Name	Pin	Pout	Tin	Tout	Eff	Flow rate	Speed	Capacity
T1	12. 4bara	6.0 bara	34.5 K	28.7K	63%	34.5 g/s	150 krpm	982 W
T2	5.6 bara	1.2 bara	13.5 K	9.15 K	65%	34.5 g/s	112 krpm	661 W

The configuration parameters design results:

Name	D_1	$D_2^{'}$	$D_2^{''}$	Bd	NO.	L1
T1	24 mm	9.4mm	13.5 mm	7.5 mm	8	1.1 mm
T2	26 mm	9.8 mm	15.3 mm	7.5 mm	8	1.3 mm

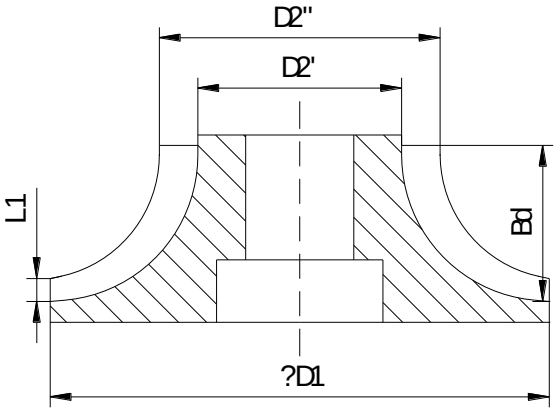

3. The Design Process and Design Results

3.1 The impeller and nozzle design

The nozzles design results of helium turbines

Name	Out Dia.	Inner Dia.	Height	Throat Width	NO.	Inlet angle
T1	36 mm	24.3 mm	0.92 mm	0.89 mm	17	12^0
T2	38 mm	26.3 mm	1.1 mm	0.97 mm	17	12^0

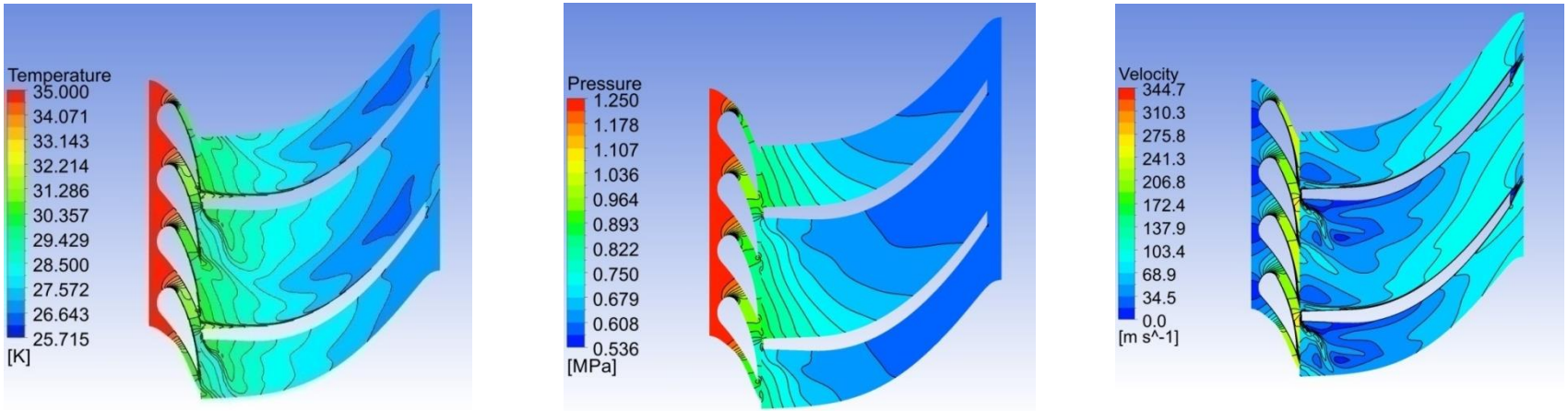

Temperature , pressure , velocity distributing of the nozzle

Name	Inlet Temp.	Inlet Pre.	Outlet Temp.	Outlet Pre.	Inlet Vel.	Outlet Vel.	Flow rate
T1	34.5 K	12.4 bara	30.09 K	8.27 bara	30.67 m/s	229.27 m/s	34.5 g/s
T2	13.5 K	5.6 bara	10.23 K	2.63 bara	23.6 m/s	152.3 m/s	34.5 g/s

3.2 Static Radial Gas Bearing Design

Name	D1,mm	L,mm	d,mm	l1,mm	N	n
Radial bearing	17	30	0.35	7	2	2×8

Radial gas bearing：

- **Rubber Rings Support**
- **8 uniform gas feed holes on the circumference**
- **The feed hole diameter is 0.35 mm**

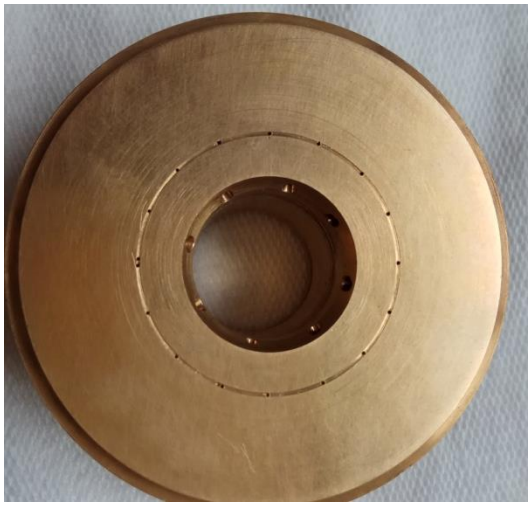

Thrust gas bearing

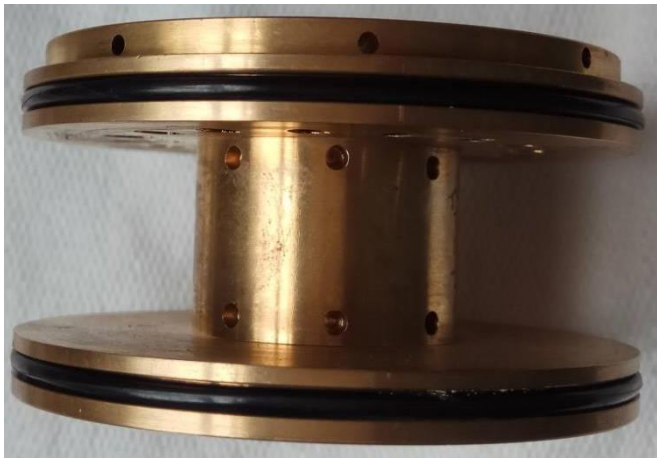

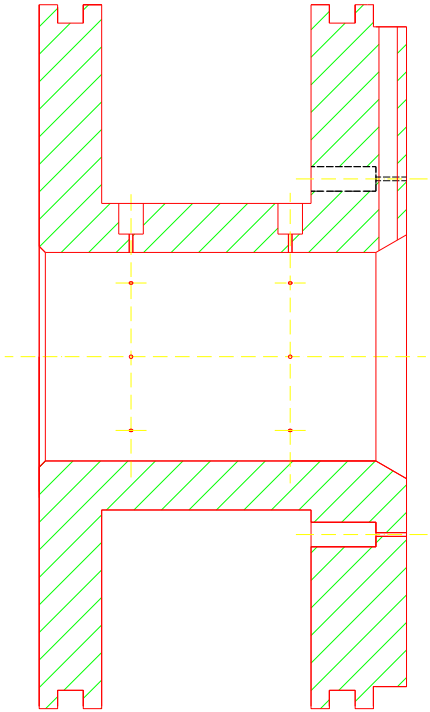

Radial and Thrust gas bearing

3.3 Results and analysis of static thrust gas bearings

Name	Rout, mm	Rf, mm	Rin, mm	d, mm	n
Thrust bearing	40	27	18	0.35	16

Thrust gas bearing:

16 uniform gas feed holes on the circumference ,

the feed hole diameter is 0.35 mm;

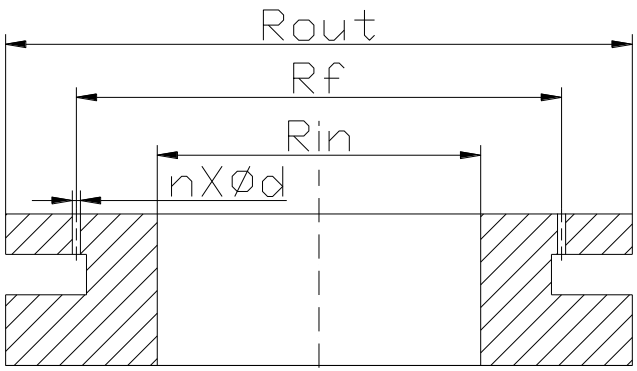

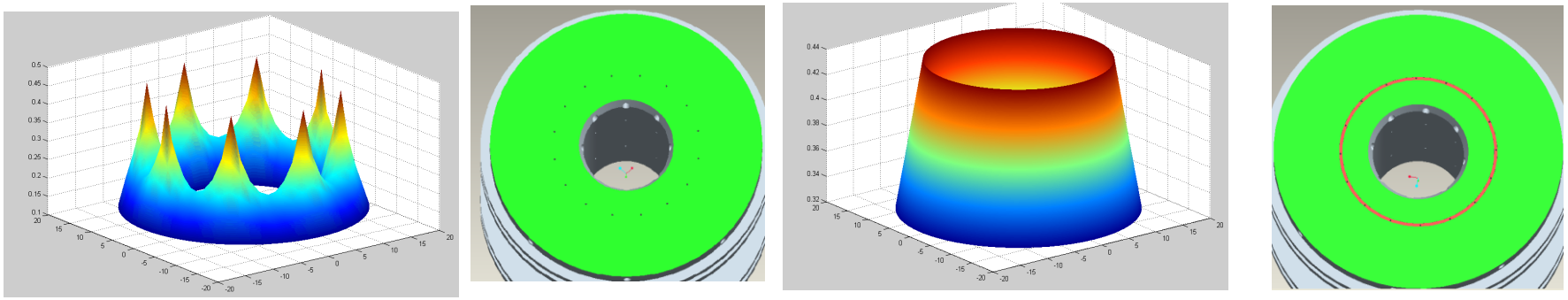

Without / with Pressure Equalizing Groove of Thrust Gas Bearing

3.4 The design of the shaft (rotor)

The rotor is the high-speed running part of the turbine. The design scheme of the single thrust plate is adopted, and the appropriate structural parameters are selected so that the second speed of the first critical speed of the rotor is greater than the normal speed of the rotor to prevent half speed edema and ensure the structural strength and thermodynamic properties of the rotor.

The design results are as follows: the single thrust plate is in the middle of the shaft; the shoulder diameter of the shaft is 17 mm; the length of the seal section is 30 mm; the thickness of the thrust plate is 13 mm; the total length is 106.5 mm.

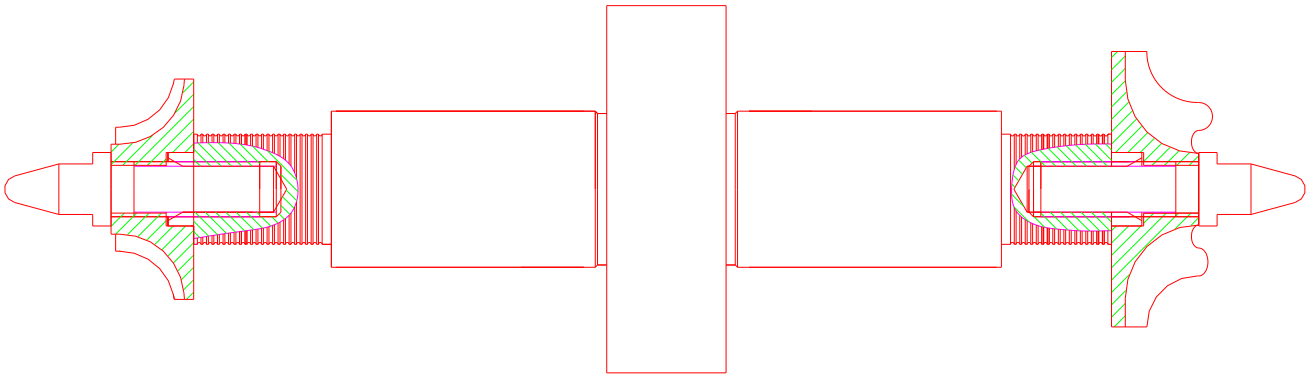

4. The balancing, assembling and testing

4. 1. The balancing of the shaft and the rotors

4.2. Assembling

4.3. Room temperature testing

4.4. Low temperature testing

4. The balancing, assembling and testing

4. 1. The balancing of the shaft and the rotors

The Results of Rotor Balance

Low Speed Balance Machine

Rotor balance testing is very important, which can improve characters of the rotor system, reduce the demand of the gas bearing; **balance grade is G0.4**, the left **unbalance quality was less than 3 mg**. The **balance speed around 8 krpm**.

4. The balancing, assembling and testing

4.2. Assembling

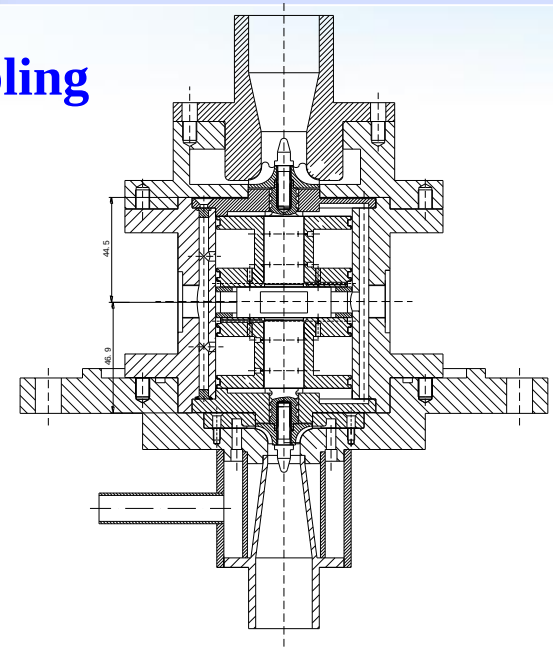

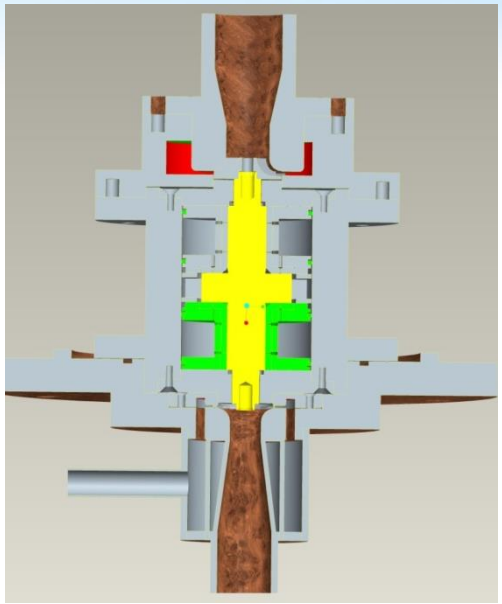

4. The balancing, assembling and testing

4.3 The testing results at room temperature

Turbine testing results:

Speed :~150 krpm;

Inlet pressure: 5.5 bara;

Outlet pressure : the atmosphere ;

Inlet temp.: ~300 K

Vibration amplitude: less than 0.01 mm

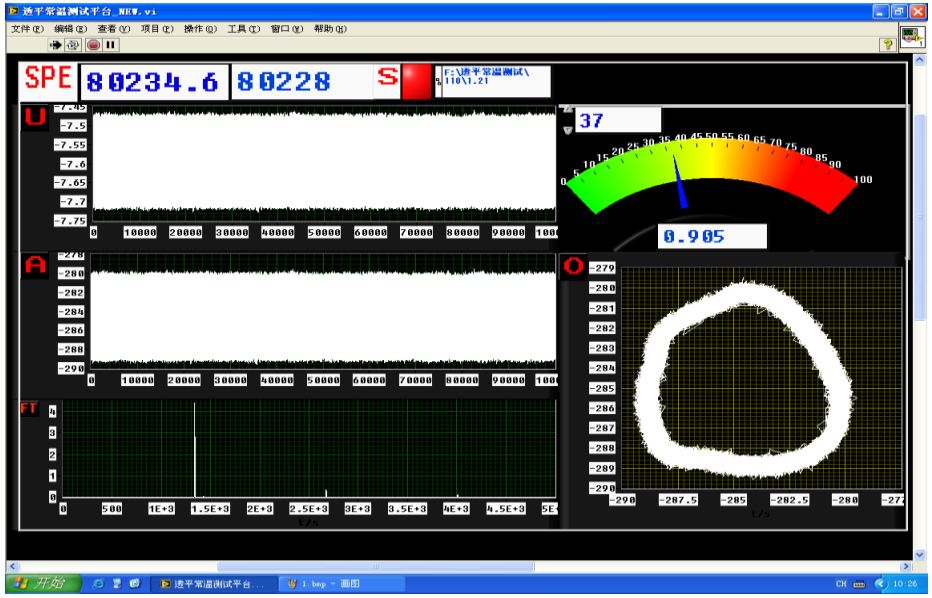

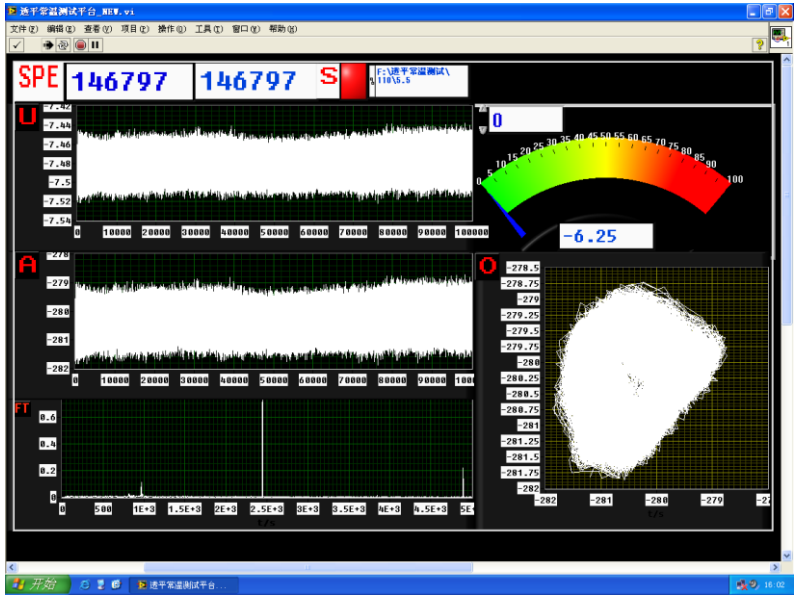

4. The balancing, assembling and testing

4.4 Low temperature testing

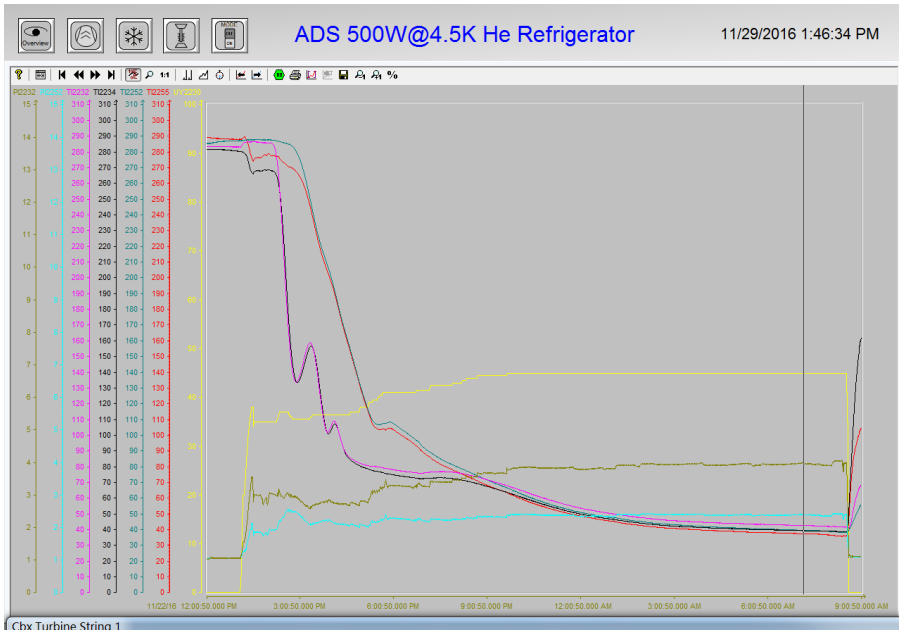

Cold-down process of testing

The inlet temperature of turbines was cooled down to 40 K

The inlet pressure can not be increased to further cool-down due to the problem of braking capacity of T2 .

During this testing, the turbines were operated about 20 hours steadily.

4. The balancing, assembling and testing

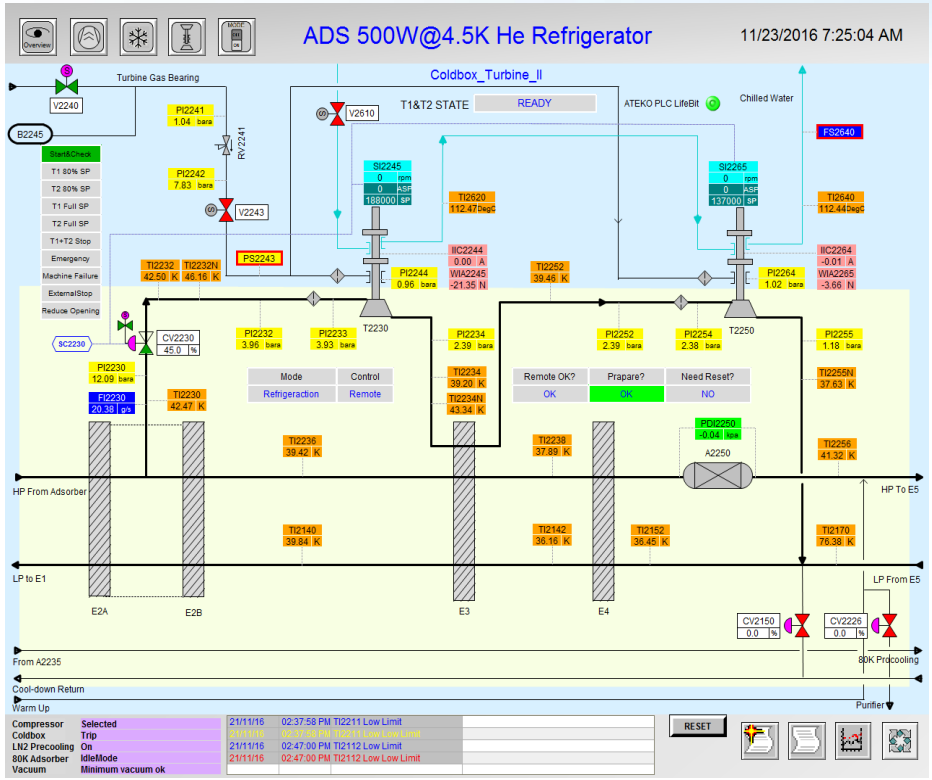

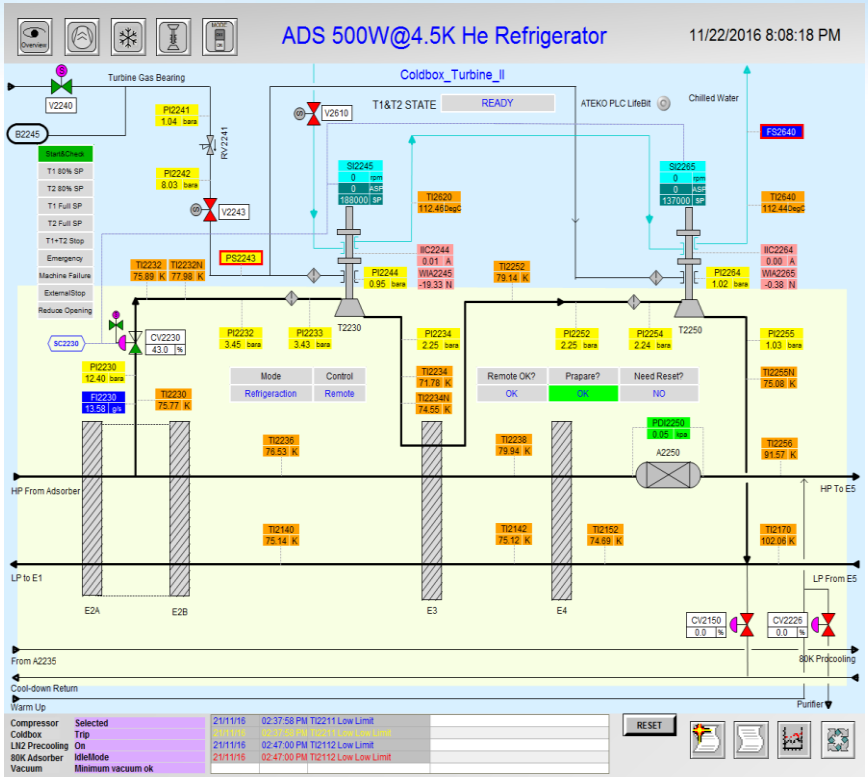

The inlet pressure was only 3.95 bara, the reason was that the braking capacity of T2was low, so the inlet pressure can not be increased more.

The inlet temperature was reached to 41.64 K(T1),38.44 K(T2).

The speeds were 127 krpm (T1), 133 krpm (T2, 18% over speed).

The braking pressure of T2 was 5.57 bara. The rated pressure is 5.5 bara.

5. Summary

1. The 500 W helium turbines have been designed, manufactured and tested.

2. The balance machine, the left unbalance quality is less than 1.0 mg@8krpm;

3. Room testing results meet speed requirements, which can reach ~150 krpm.

4. Low temperature testing indicated two turbines can operated steadily.

5. Braking capacity of T2 was low, inlet pressure can not be increased to further cool-down and analyze the performance of efficiency.

6. Upgrade of this helium turbines have been done, and it is been manufactured now. The testing will be carried out next.

Thank you for your attention!

Any questions, please contact fubao@ipp.ac.cn