# Development of a 3 stages ADR for Space

**D. A. Paixao Brasiliano[1], J.M. Duval[1], N. Luchier[1], J. André[2]**

[1] Univ. Grenoble Alpes, CEA, INAC, SBT, F-38000 Grenoble, France

[2] CNES, 18, Avenue Edouard Belin, 31401 Toulouse Cedex 9, France

jean-marc.duval@cea.fr

**Abstract**. Several next generation space telescopes (Athena, SPICA…) requires 50 mK cooling for the detectors to achieve the desired sensitivity. Such low temperature in space is achieved by using cooling chain coupling different coolers for each temperature range. For the lowest temperature stage, several cooling solutions exists including the use of multi stage adiabatic demagnetization refrigerator (ADR). This paper describes the conception and the first thermal validation of our 3 stage ADR. Two key points for such technologies are the optimization of the heat switches and the choice of paramagnetic material which will be discussed in this paper. As a validation, the classical paramagnet GGG (Gadolinium Gallium Garnett) and CPA (chromic potassium alum) are used as refrigerant. Alternative material choices are presented and discussed.

## 1. Introduction

Cooling down detectors to temperature well below 1 K is essential to achieve the required sensibility of many astrophysics mission. The trend is to go to lower and lower temperature, for example from the 300 mK and 100 mK of Plank and Herschel satellites, launched in 2009, to the 50 mK of the detectors of the SXS instruments of Hitomi satellite launched in 2016. This trend is true both for X-ray detectors (Hitomi, Athena/X-IFU) and for infrared instruments such as SPICA/SAFARI. Only few technical solutions - dilution, sorption cooling and magnetic cooling - have been developed for space application. In this papier we discuss development made in the field of magnetic cooling based on several stage of adiabatic demagnetization refrigerator (ADR) in cascade.

An extensive work on ADR in cascade have been done by the NASA/Goddard team, including the development of the ADRs cooler embarked onboard the Hitomi satellite. This cooler demonstrated good performances before the unfortunate end of the program due to malfunction of the satellite unrelated to cryogenics. This demonstration validates in the best way the suitability of ADR for space cooling. In our laboratory (CEA/SBT), an extensive work has been done on the design, manufacture and qualification of a hybrid cooler based on the coupling of a sorption cooler with an ADR stage. This program led us to design and qualify an ADR stage for space. This knowledge and experience has been a great building stone for the development of multistage ADR. While the coupling of sorption and ADR offers an ideal compromise between mass and cooling efficiency, the use of combined ADR stage offers a greater flexibility in terms of interface temperatures. Our first step in the field of multistage ADR has been the “EASYCOOL” program for which a 5 stage ADR has been designed and tested for ground base applications [Duval et al, 2013]. This demonstrator offered two levels of continuous temperature and had been experimentally validated, together with the use of KID detectors

validating the magnetic shielding efficiency of the design and the suitability of such a cooler with sensitive detectors.
The work presented here focuses on a cooler also based on the succession of ADR in cascade. The design of this cooler has been previously presented [Diego et al, 2015] together with experimental measurements of the properties of a specific paramagnetic material: CCA (chromic caesium alum). The key parameters for cascade ADRs are the paramagnetic materials and the heat switches. In parallel to the realization of a demonstrator, a large part of our work has been concentrated on the study of potential paramagnetic materials to lower the total mass. These development and potential alternatives materials have not been used for this prototype : it is based on the wel known gadolinium gallium garnet (GGG) and chromic potassium alun (CPA). The cryostat used for the thermal qualification of the cooler is cryogen free and based on a commercial low frequency pulse tube cooler. Some losses have been measured on the last stage of the ADR, and the hypothesis to explain them are presented. A large part of this paper focuses on the experimental characterization of the three stage ADR designed and manufactured.

## 2. Design

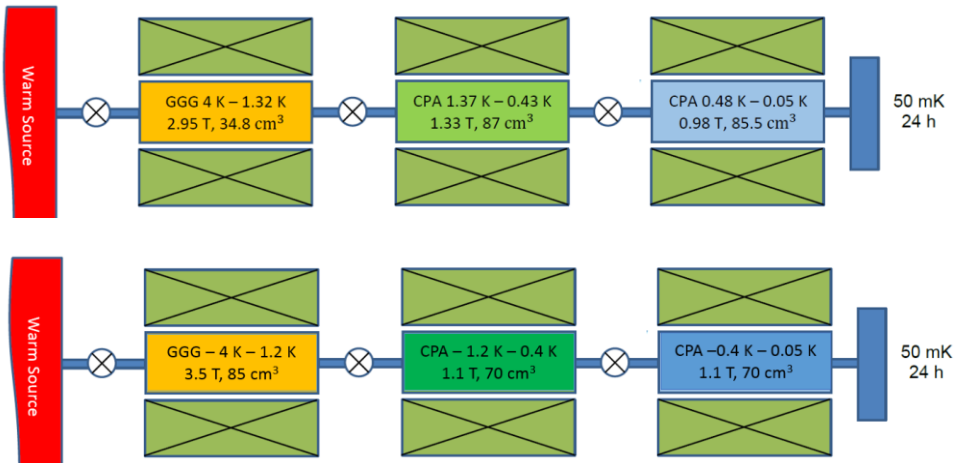


**Figure 1**. Schematic of the three-stage ADR. The magnetic fields indicated are averaged over the salt pill volume.

a – optimized version b- manufactured version

The goal of the designed ADR is to cool down to 50 mK from a 4 K cooling source. An optimization of the mass, number of stages and magnetic field of each stage has been done with in-house numerical software. Each stage is better optimized by limiting its operating temperature range and adding stages reduces the total mass, at the cost of added complexity, both for the manufacturing and for the operation. We concluded that 3 stage is a good compromise for such a temperature range.

For this model, the traditional material, GGG (Gadolinium Gallium Garnet) and CPA (Chromic Potassium Alum) has been used for this optimization. The optimized cooler is presented on figure 1. Once this initial design has been done, we allowed room in the size of the cooler to be able to implement and test other material that we are working on in material. For example, YbGG (Yttrium Gallium Garnet) is a good candidate for the second stage of this ADR as will be described in a paper in writing. As a final step of the iteration, the possibility to use existing magnetic design, based on the SAFARI EM cooler previously discussed was another advantage. This led us to consider 2 last stages with 1.1 T maximum field and a pill of 70 $cm^3$. The final sizing of the demonstrator is presented on the figure 1.b.

Based on this sizing a cooler fulfilling as much as possible the space integration has been designed as presented on figure 2.

This design comprises three independent stages, allowing for easy integration and testing. The heat switches are based on our space qualified program from the Herschel program. Paramagnetic salt is

supported by Kevlar. To reduce losses, the Kevlar strings are heat intercepted at several temperature levels, strongly limiting the heat losses on the colder stages. For a final space design, the main modification will concentrate on the heat switch supports on this version, the “snubber” that we typically used have not been implemented. Another modification would be to concentrate and a more compact overall design. This would not modify the thermal measurements validations presented here.

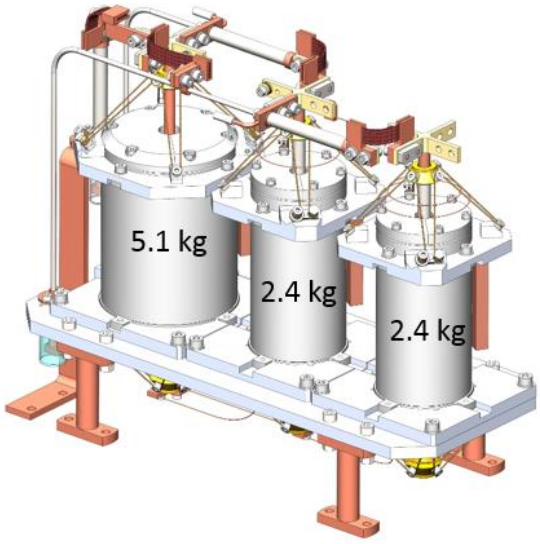


**Figure 2.** Artist view of the three stage ADR. The magnetic fields indicated are averaged over the salt pill volume.

In this version, which takes cost and integration constraints, the total mass is 11.55 kg that could be compared to the optimized mass presented above. A reduction of mass of about 2 kg for a more optimized version should be considered.

### 3. Test bench and thermal characterization

After manufacturing, the three stages ADR has been tested in a dry test cryostat, shown figure 3, designed in the lab and including a Cryomech PT 415 for cooling shields at about 40 K and the base place at a temperature ranging from 3 K to 4 K. Both these temperature can be regulated during test.
For the initial validation and the results presented here a temperature of 3.5 K has been chosen.

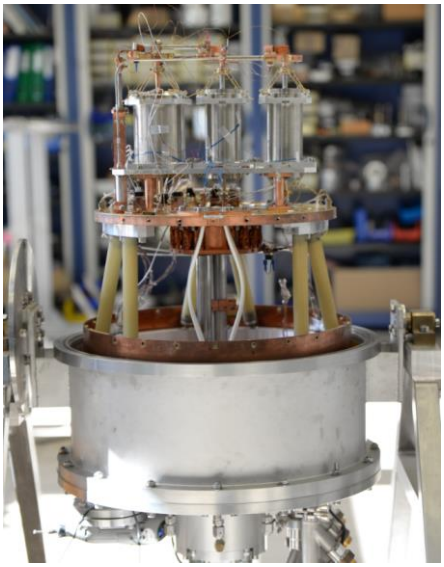

**Figure 3.** ADR in the dry cryostat used for the experiments.

Each components - heat switches and superconducting coil – has been characterized independently before the integration in the prototype. Then each stages has been characterized one by one until the three stages could operate together. An estimation of the losses on each stages has been made. The method used is to regulate the stage at a constant temperature, by controlling the current ramp of the coil and then applying a known power by the use of heaters placed on the stage. The comparison of the current ramp rate leads to the parasitic losses. The results are presented on the table 1, compared to the prediction based on thermal conductivity of materials (Kevlar support and Ta6V and stainless steel heat switches tubes).

**Table 1.** Calculated and measured losses on the three stages of the prototypes

| | Prediction (no margin included) | Measurements | Comments |
|---|---|---|---|
| First stage | | | Losses depends on interface temperature |
| With 3K interface | 22 µW | 17 µW | |
| With 4 K interface | 42 µW | Not yet measured | |
| Second stage | 3 µW | 5.5 µW | |
| Third stage | 0.1 µW | 0.2 – 0.4 µW | Measurements not reproducible |

The losses on the first stages are directly linked to the interface temperature. For the initial measurements presented here, an interface temperature of 3 K has been used, that gives lower losses, and therefore more time and more precise measurements to evaluate the individual properties of the components. The difference of 25 % could be explained taking into account uncertainty on the exact geometries and on the material properties and of the measurements itself. It is understandable. The difference on the second stage of about 80% of the predicted losses can be explained partly by an imperfect thermalization of the Kevlar support. It will be investigated during the next campaign. The most complicated and limiting losses is the losses on the third stages which has not been reproducible. To study these losses more specifically, measurements have been made in various conditions. Typically, a regulation of 1.2 K, 0.8 K and 0.8 K and respectively the first, second and third stages has been made. In theory, the parasitic losses expected on the third stage in this condition is close to zero (no conduction, very low radiations …). However the measurements showed erratic behaviors. This behavior affects also the second stages and probably the first stages, but the low values of these losses is significant only on the third stage.

### *3.1. Operating frequency of the compressor*

A potential origin of these varying losses is the heat dissipation caused by the vibrations generated by the pulse tube and its rotating valve. To evaluate this, a dedicated house made electronics has been implemented to control the rotating frequency of the rotating valve. Measurements are made, again on the current ramp when modifying the frequency of the valve. A typical result is presented on figure 4. This plot indicate a clear link between the operation of the valve and the measured losses. It has been however non reproducible.

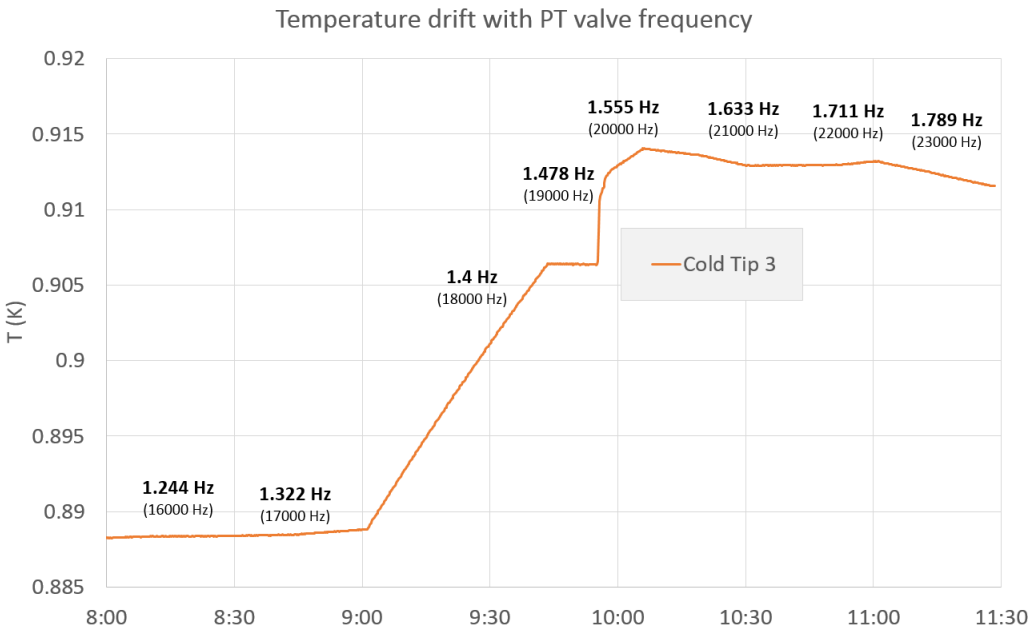


**Figure 4.** Measurements of the temperature of the third stage as function of time when the rotating valve frequency was modified. Bold numbers indicated the valve frequency while numbers below indicates the stepper command frequency.

Many other measurements have been made, including the influence of shock on the cryostat and measurements overnight such as presented below which showed a changed in the losses with no apparent modification of the environment.

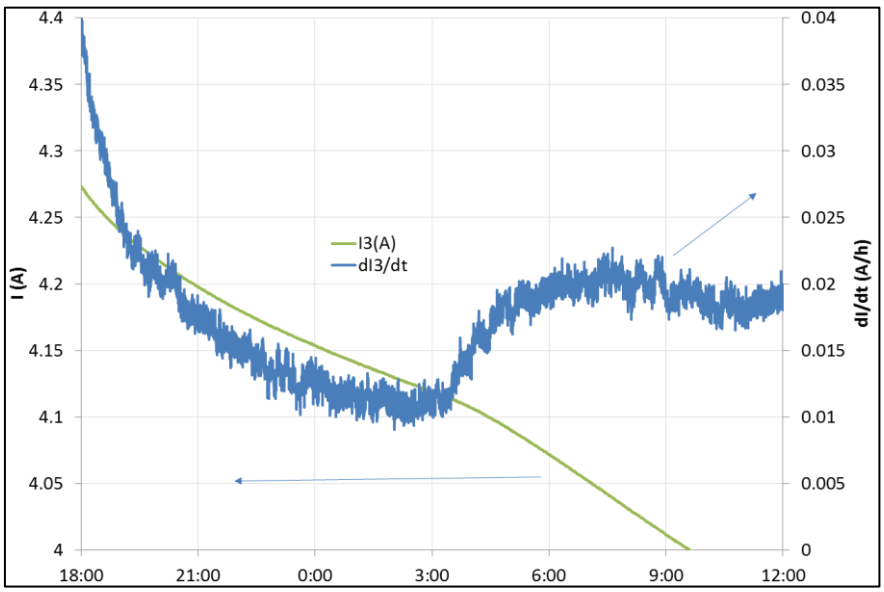


**Figure 5.** Measurements of the current of the third stage as function of time with no modification of the environment. The temperature is regulated at 0.8 K. To emphasize the change of the ramp, its derivative is plotted in blue on the right scale.

While a clear link with the pulse tube operation has been shown, no clear explanation of these losses have been proposed and either EMC or microvibrations or a combination of both could be suggested. Measurements on the full prototype, taking into account these uncertainties have been pursued.

## 4. Recycling and thermal cycling

The thermal recycling has been well discussed in the previous paper. A typical cycle is presented on the plot FIGURE 6. One can see a succession of recycling phase, with cold regulation. The first part of the cycle (5 hours) corresponds to the remagnetizing phase, where the heat is dumped on the warm interfaces. The first stages alternate several time to dump all the heat of the colder stages. The cycle presented here is typical of a first cycle, when all the stages starts at warm temperature. A more efficient cycle is made when the ADR are already cold. During the second phase of the cycle (24 hours), a power is continuously applied to each stage. It is the useful power that could be used for a real experiment.

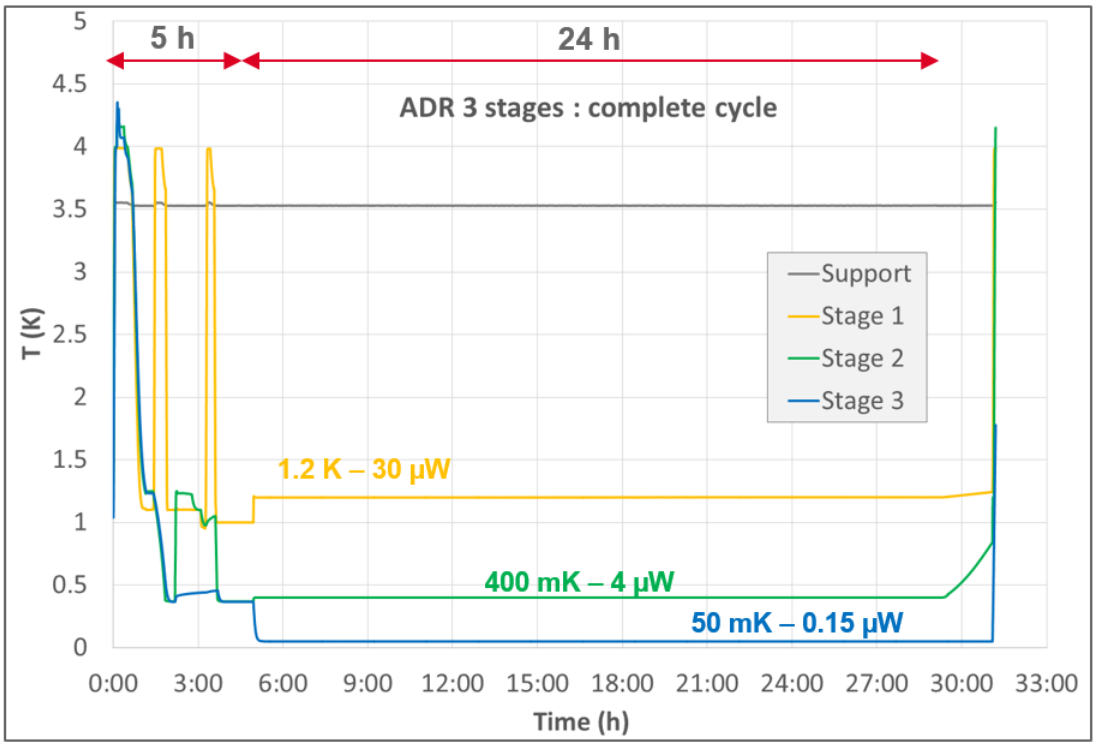


**Figure 6.** Typical temperature variations over a remagnetizing period and a cold period.

The power on the third stage has been limited to 0.15 µW in this experiment to compensate for the unexpected losses presented above. The advantages and difficulties of such cooler is the large number of possible temperature conditions for the operation. In the future characterization, in parallel to the investigation on the losses, different operating conditions will be studied.

## 5. Conclusion and perspectives

A 3-stage ADR has been manufactured and tested. 50 mK cooling has been achieved with more than 24 hours cold phase with a cooling power of 0.15 µW. Alternative material, such as YbGG (Yb3Ga5O12) would make possible to reduce marginally (opposite) the mass of the cooler, especially the second stage. Such demonstration will be the focus of our following work.

Overall, we demonstrated the predicted performances of the prototype which could be adapted to fulfill space qualification.

## 6. Acknowledgement

This work is financially supported by CNES and CEA. We wish to thank Jean-Louis Durand for the experimental work and his expertise in the design, set up and experimental measurements. Thanks to Florian Bancel for the design of the full model.

**References (to be completed)**


[1] Duband, L., et al. "SPICA/SAFARI sub-Kelvin cryogenic chain." (2008)

[2] Ravera, Laurent, et al. "The X-ray integral field unit (X-IFU) for Athena." *SPIE Astronomical Telescopes+ Instrumentation*. International Society for Optics and Photonics, 2014

[3] Shirron, P. J., et al. "A multi-stage continuous-duty adiabatic demagnetization refrigerator." *Advances in cryogenic engineering*. Springer US, 2000. 1629-1638

[4] Shirron, Peter J., et al. "Design of a 3-stage ADR for the soft x-ray spectrometer instrument on the ASTRO-H mission." *SPIE Astronomical Telescopes+ Instrumentation*. International Society for Optics and Photonics, 2010

[5] Shirron, Peter J. "Applications of the magnetocaloric effect in single-stage, multi-stage and continuous adiabatic demagnetization refrigerators."*Cryogenics* 62 (2014): 130-139Charrier, A., I. Charles, B. Rousset, C. Daniel, and J. M. Duval. "Development of a 4K Pulse-Tube Cold Finger for Space Applications." Crycooler 18 (2014): 1–10.

[6] Duband, L. "A thermal switch for use at liquid helium temperature in space-borne cryogenic systems." *Cryocoolers 8*. Springer US, 1995. 731-741

[7] Hagmann, C., D. J. Benford, and P. L. Richards. "Paramagnetic salt pill design for magnetic refrigerators used in space applications." *Cryogenics* 34.3 (1994): 213-219

[8] Luchier, N., et al. "Performances of the 50mK ADR/sorption cooler."*Cryogenics* 52.4 (2012): 152-157

[9] Timbie, P. T., G. M. Bernstein, and P. L. Richards. "Development of an adiabatic demagnetization refrigerator for SIRTF." *Cryogenics* 30.3 (1990): 271-275