CASIPP

EAST

Operational Present Status and Reliability Analysis of the Upgraded EAST Cryogenic System

Z. W. Zhou, Q. Y. Zhang*, X. F. Lu, L. B. Hu and P. Zhu

Institute of Plasma Physics, Chinese Academy of Sciences,

P.O.Box 1126, Hefei, 230031, China

Content

- Introduction
- Upgrade of EAST Cryogenic System
- Experimental Operation Present Status
- Reliability Analysis
- Conclusion and Perspective

EAST Tokamak & Cryogenic System

CASIPP

Warm Compressor Station & 10000 Nm3 helium gas tanks

2kW/4.5K Helium Refrigerator

EAST Cryogenic System (ECS)

Cool-down

One of Critical Sub-systems

EAST Superconducting Tokamak

Cryogenic distribution system

Cold Components

- PF Coils， TF Coils， TF Coil Cases，Thermal Shields
- Buslines，HTS Current Leads (CL)，Built-in Cryopumps

Total cold mass

- 250 tons

Process Flow of Upgraded ECS

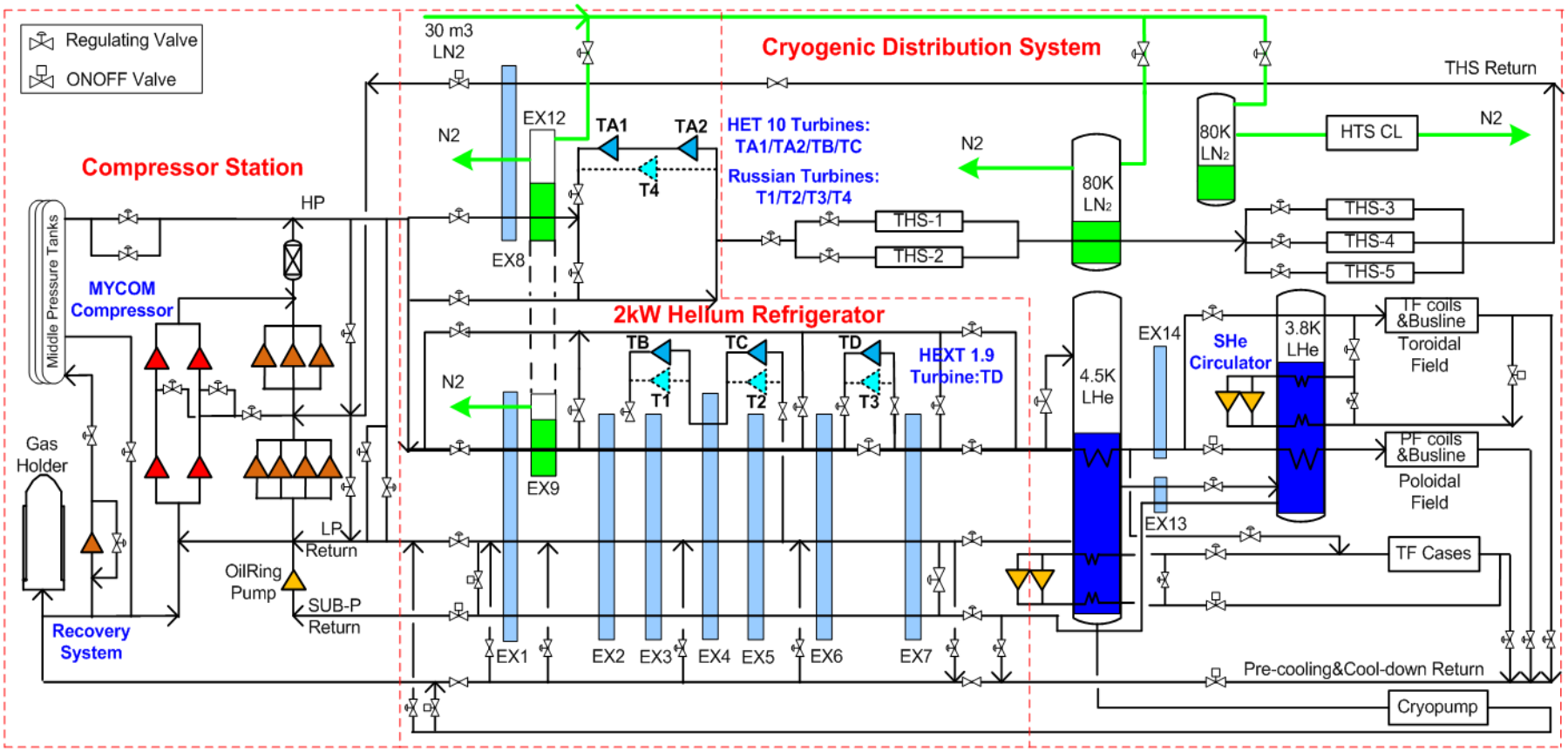

Two refrigeration cycles with LN2 pre-cooling

- Claude cycle with 3 turbines to produce refrigeration power at 4.5K for SC
- Reverse-Brayton cycle with two turbine in series to produce refrigeration power at 80K for THS
- Equivalent refrigeration power: 2 kW/4.5 K

Compressor System Upgrade

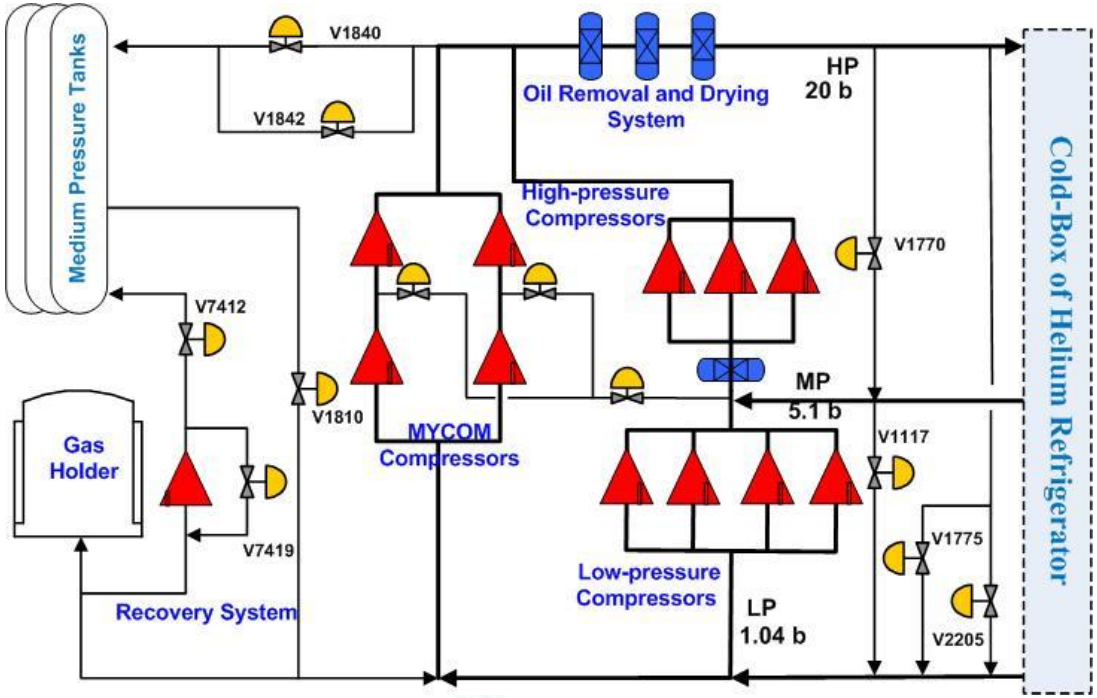

New Compressor Station

Two new MYCOM oil injected screw compressors

- Installed in parallel with 7 old compressors, which can used as spare on standby
- Every set has two stages, creating a low, medium and high pressure
- **Mass flow rate:** (LP) 135 g/s, (HP) 185 g/s, regulated by the slide valves
- **Pressure:** (LP) 0.1043 MPaA, (MP) 0.3~0.42 MPaA, (HP) 2.1 MPaA, controlled by 9 control valves

Turbine System Upgrade

- **Five new dynamic gas bearing turbines with eddy current brake**
  - To replace original oil-gas hybrid bearing turbines
  - T3 replaced with full dynamic gas bearing helium turbine TD
  - T4 replaced with two big break power gas bearing turbines TA1&TA2 in series

Turbine Expanders	TB	TC	TD	TA	
				TA1	TA2
Type	HET 10	HET10	HEXT 1.9	HET 10	HET10
Inlet pressure (barA)	19.0	7.1	18.5	19.0	10.0
Outlet pressure (barA)	7.5	1.25	4.5	10.0	4.0
Inlet temperature (K)	43.5	18.9	7.6	80	66.1
Helium mass flow (g/s)	98	98	147	110	
Isothermal efficiency (%)	>= 75.5	>= 77.0	> 70.0	>= 79.6	
Cooling power (W)	5333	3577	1100	8193+9057	
Nominal Speed (rpm)	187000	107500	120000	181000	161000

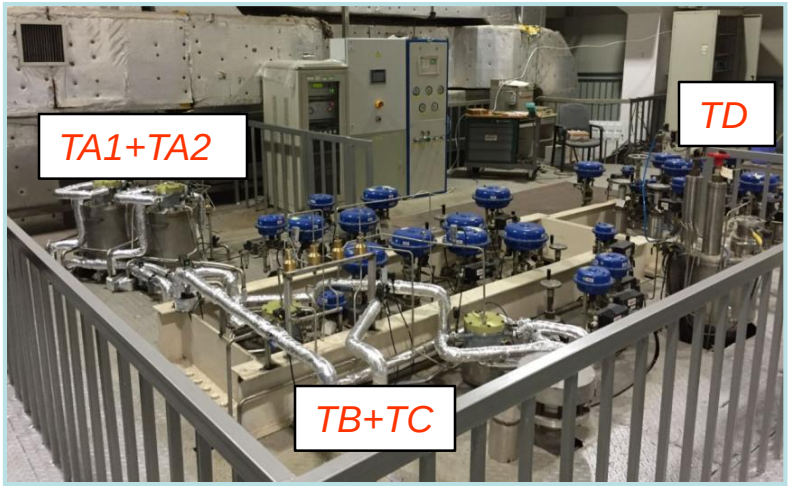

Cryogenic Control Network Upgrade

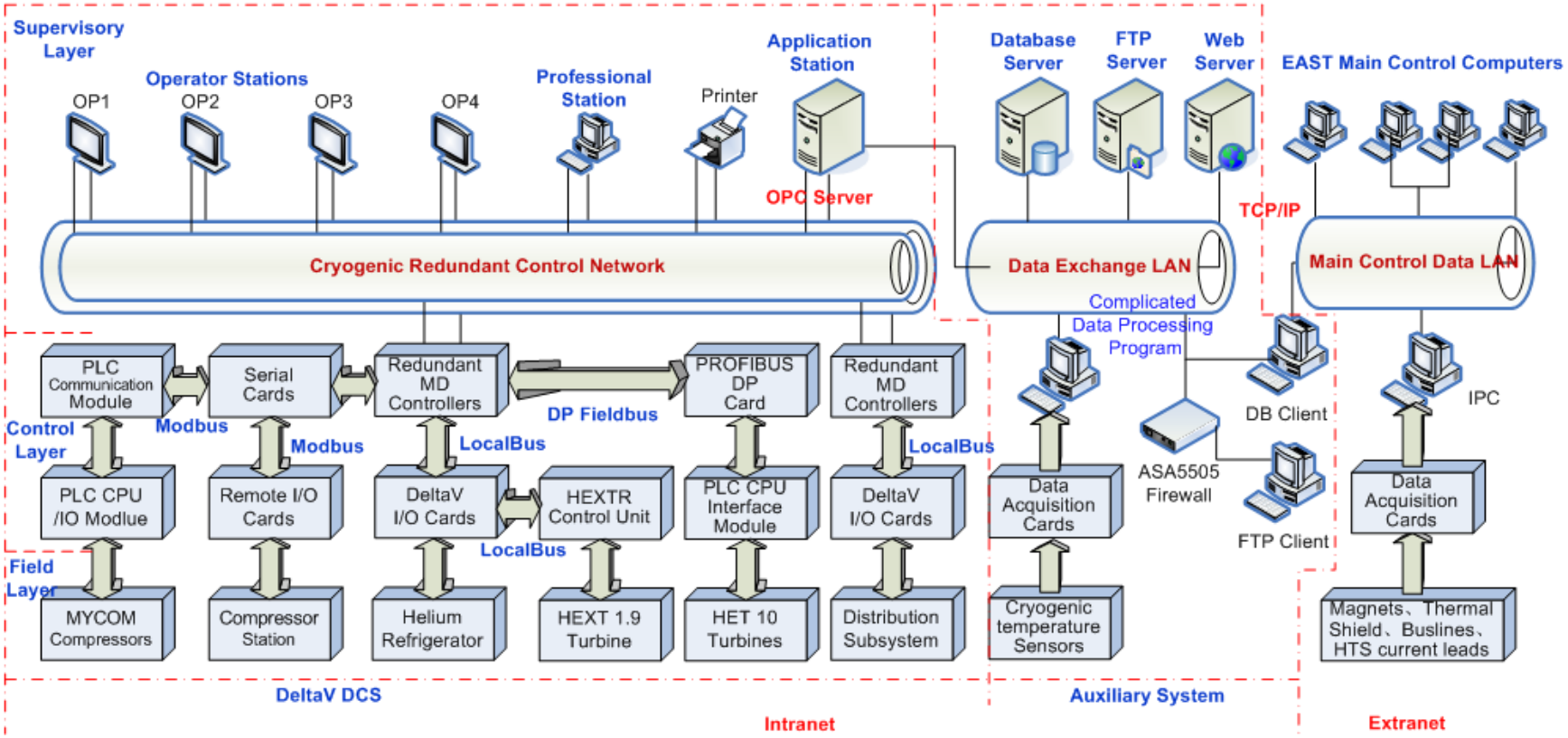

Upgraded DeltaV DCS: centralized supervisory, distributed control

- Three-layer redundant control network and expands function through OPC protocol
- New compressors and turbines PLC communicate with DCS through MODBUS/PROFIBUS DP protocol

Latest I/O List of ECS

I/O	MYCOM Compressors	Compressor Station	Helium Refrigerator	New Turbine	Distribution Subsystem	Magnets THS, HTS CL	Total
AI	66	89	122	60	108	341	786
AO	2	10	48	20	46	30	156
DI	16	109	17	52	24	/	218
DO	8	69	22	18	68	/	185
Total	92	277	209	150	246	371	1345

- **Various process parameter types**
  - Temperature, Pressure, Pressure difference, Mass flow rate, Liquid level, Rotation speed, Gas purity, Vacuum degree, Power, Displacement…
- **Various controlled parameters**
  - 17 pressure, 20 temperature, 6 liquid level, 19 flow rate, 8 rotation speed, 4 purity
- **~160 PID control loops for cryogenic process control**

Operation Timetable of ECS

- Put into operation for 13 experiments since the first cool down in 2006

	1st	2nd	3rd	4th	5th	6th	7th	8th	9th	10th	11th	12th	13th
Start Cooling Date	18th FEB, 2006	4th APR, 2006	26th DEC, 2006	5th JUN, 2008	12th FEB, 2009	22th FEB, 2010	20th AUG, 2010	30th JAN, 2012	31th MAY, 2014	7th MAY, 2015	11th DEC, 2015	10th AUG, 2016	2nd MAY, 2017
300~80K Pre-cooling Time	11	11	11	11	13	15	10	12	12	14	14	18	16
80~4.5K Cool-down Time	9	38	7	9	8	7	6	5	6	6	6	5	6
4.5K State Time	18	31	28	57	50	79	113	148	138	73	131	140	38…
Warm-up Time	7	7	6	7	6	6	10	8	7	7	12	10	/
Operation Time	45	87	52	84	77	107	139	173	163	100	163	173	60…
Total Operation Time	1423 days till the end of June,2017												

EAST Cool-down after Upgrade

- **300~80 K Pre-cooling**
  - PF, TF, cases and THS cool-down simultaneously and automatically to maintain temperature gradients within 50K to avoid the destruction by heat stress
- **80~4.5 K cool-down**
  - New turbines operate automatically after upgrade; the whole refrigerator will operate in auto mode in near future
- **4.5 K steady state operation**

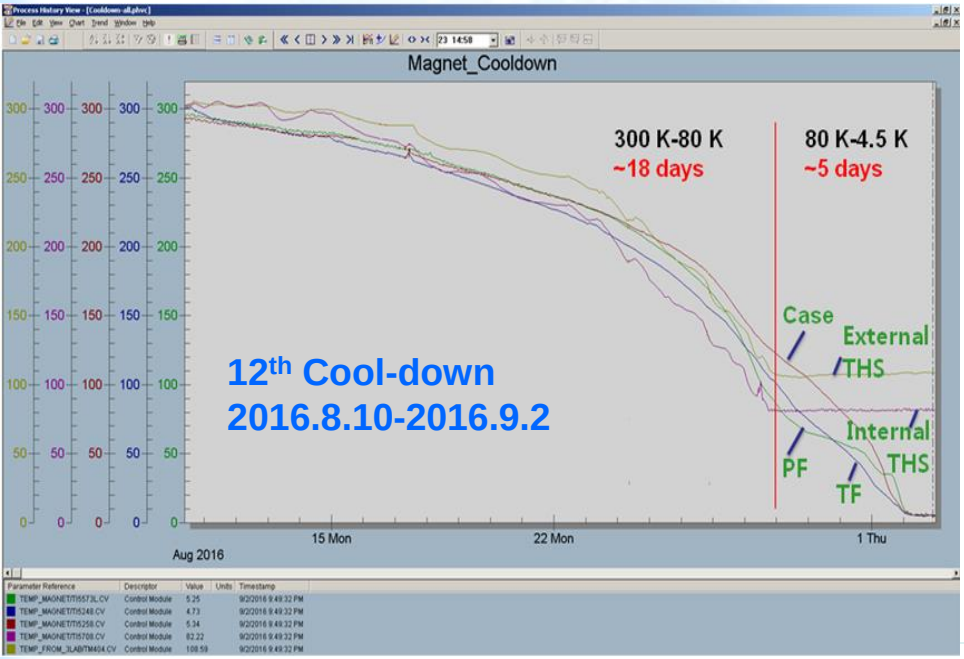

New Compressors Operation

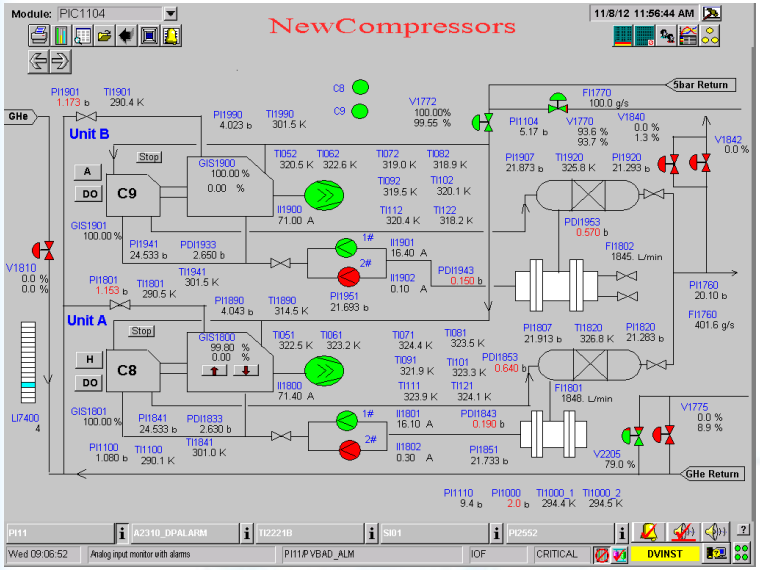

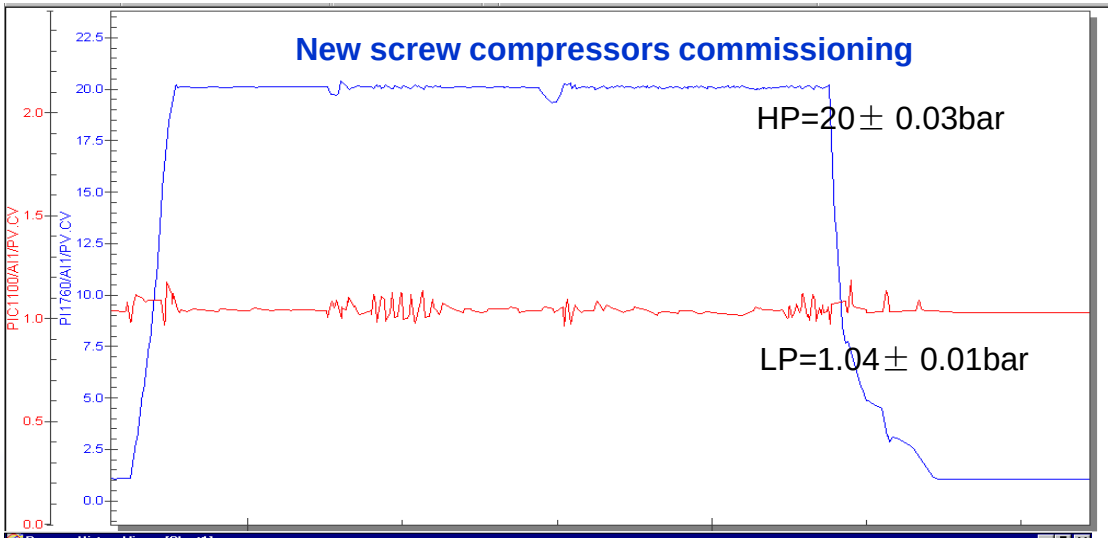

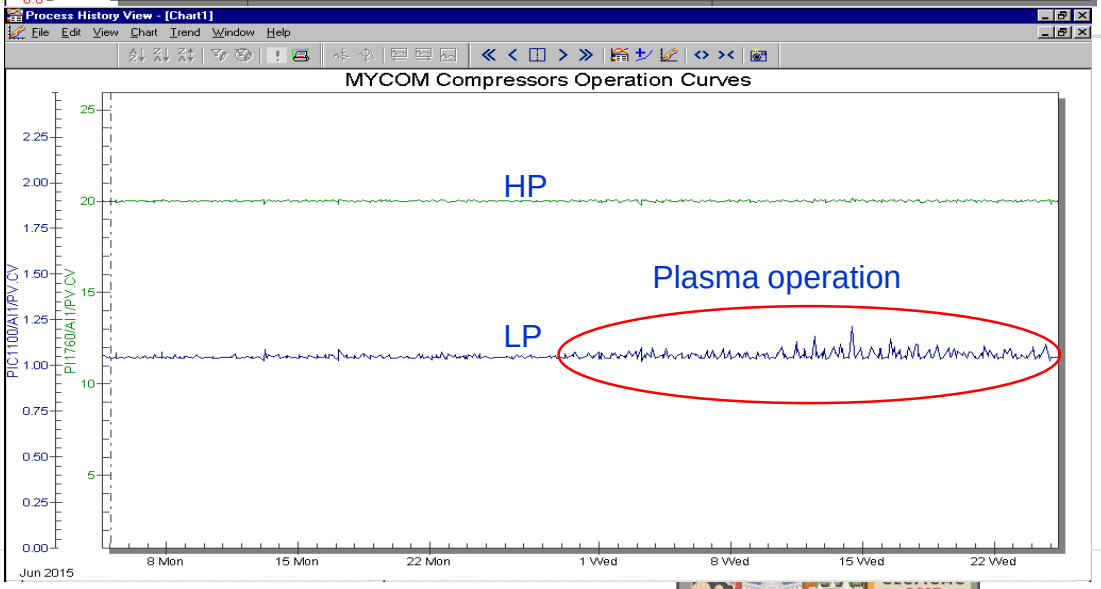

New compressors

- Complete the start process to reach nominal mass flow within half an hour
- Pressures controlled stable
- operated continuously over 2 months in automatic mode without any problem

New Turbines TB&TC Operation

- **Big break power gas bearing helium turbine with eddy current brake**
  - Operated with Rotor Cooling Circuit (RCC)
  - Total braking capacity can reach **10 kW**
  - Fully dynamic radial gas bearings
  - Lower thrust gas bearing is static to increase thrust carrying capacity
  - Easy operation, fast and stable startup: **4 min**
  - PLC control system control turbines' automatic start/stop and protection
- **Long term stable mechanical and control performance**

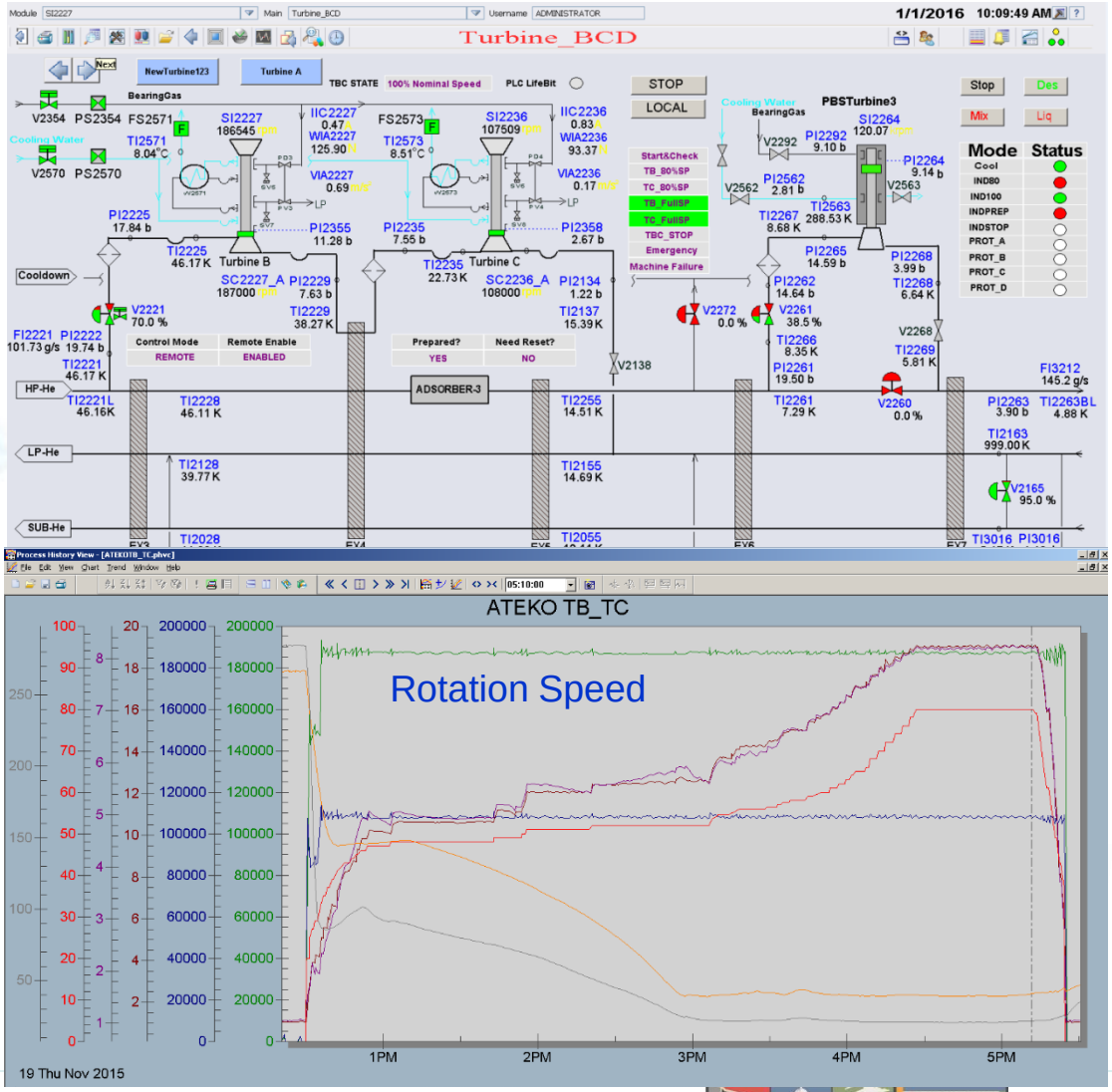

New Turbine TD Operation

- **Full dynamic gas bearing turbine with eddy current brake**
  - Fast brake response
  - Easy operation, fast and stable startup: only 2 min
  - High automation degree
  - Long period stable operation for 5 cool-down experiments

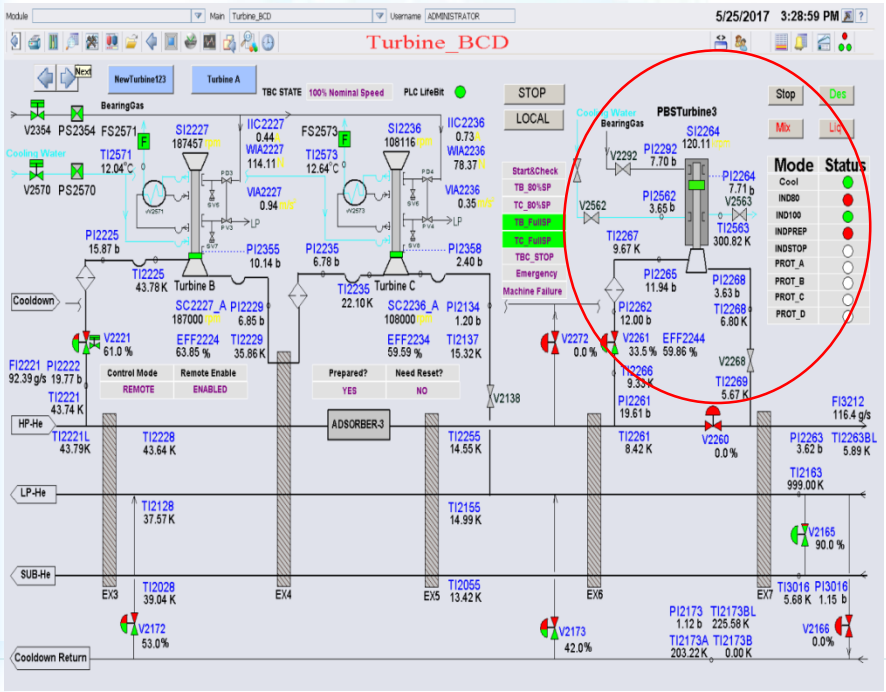

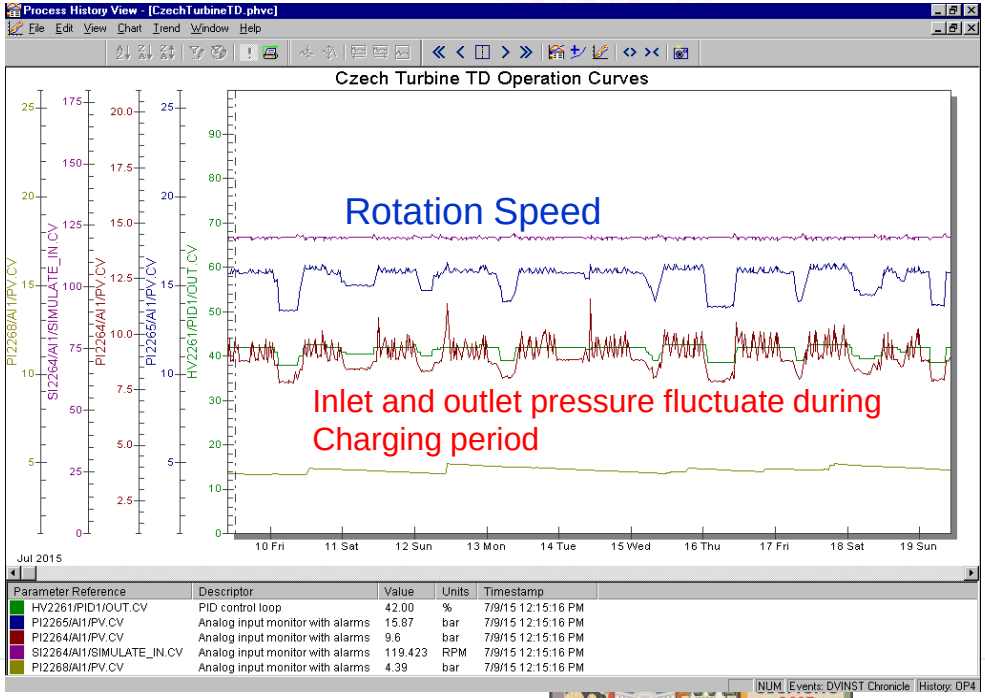

Reliability Analysis

Abnormal events and faults (2006~2017)

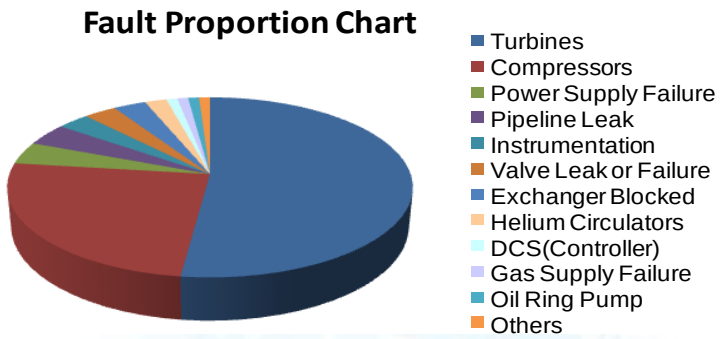

Turbines & Compressors fault stop

- happened before upgrade
- caused by mechanical failure; cannot be restarted in short time again
- never happened again after upgrade (2015-)

Turbines protection stop

- happened several times after upgrade
- caused by other failures only consumed several hours to recover to normal

Fault Type	Fault proportion	Effects in EAST cryogenic system
Turbines fault stop	52%	Cool-down can't continue; can't maintain the cooling, the magnets required discharge in 4.5 K steady state
Compressors fault stop	25%	The cryogenic system cannot maintain operating in any operational mode
Leak (gas/oil)	4%	Bring economic losses; oil leak may contaminate to the system which could cause other failures
Power supply failure	4%	May cause compressors/turbines stop or damage to them or helium gas losses
Instrumentation	3%	Influence process monitoring or automatic control
Valve (blocked/leak)	3%	Blocked valve may cause the system stop; bring economic losses
Heat exchangers blocked	3%	Decrease the efficiency or may cause the system stop
Helium circulators	2%	Can't maintain the forced-flow cooling, the magnets required discharge in 4.5 K steady state
DCS failure(controller)	1%	The cryogenic system cannot be operated or controlled
Gas supply failure	1%	Control valve came into Fail state, could cause turbines protection stop or influence normal operation
Oil ring pump	1%	Can't maintain 3.8 K cooling, back to 4.5 K operation
Others	1%	Can be restored in time, didn't have too much effect in normal operation

Conclusion and Perspective

- **Compressor system, turbine system and cryogenic control system have been upgraded and operated for latest three cool-down experiments since 2015, and been verified the long term stability and reliability**
- **Lower fault rate and helium gas leakage, lower power supply consumption and higher automation degree and refrigeration power**
- **Proposal for higher reliability will be considered**
  - The spare turbines on standby within cold box should be considered to allow resuming plasma operation in less than one day
  - The reparation spare for critical components as well as each type of instrumentation must be available on site
  - The vibration of new compressors should be monitored and analyzed for preventive maintenance
  - Spare recovery compressor should be arranged in parallel on standby in case of gas losses in emergency
- **Fully automatic control for the whole refrigerator in the experiment in future, especially automatic control in case of emergent fault .**

Acknowledgements

- Cryogenic Engineering Division for their expertise of the EAST cryogenic system.
- Financial support by the National Natural Science Foundation of China (Grant No. 11505237) and the Science Foundation (DSJJ16GC02) within the Institute of Plasma Physics, Chinese Academy of Sciences

Thanks for your attention !