Investigation of a working fluid for cryogenic energy storage systems

Wojcieszak P., Poliński J., Chorowski M.

Faculty of Mechanical and Power Engineering, Wrocław University of Science and Technology

Wyb. Wyspianskiego 27, Wroclaw, 50-370, Poland

pawel.wojcieszak@pwr.edu.pl

Wrocław University of Science and Technology

BACKGROUND

One of the most important goals of energy strategy of European Union is to increase the share of renewables in electricity production. Most of the renewable energy sources, particularly solar and wind energy, are intermittent, they rely highly on the weather. As a result, renewable energy production times do not match the demand for electricity. Intermittency makes replacement of the conventional power plants with renewable energy sources difficult. Stabilization of the electrical grid system with large share of renewables is possible with use of the energy storage systems. When the renewable energy is available, generated electricity is transformed into other form of energy that can be stored. If energy demand is high and not enough electricity is generated in power plants, energy can be unloaded from the storage. Cryogenic energy storage (CES) systems are promising alternative to existing electrical energy storage technologies such as a pumped hydroelectric storage (PHS), battery energy storage or compressed air energy storage (CAES).

CRYOGENIC ENERGY STORAGE SYSTEMS

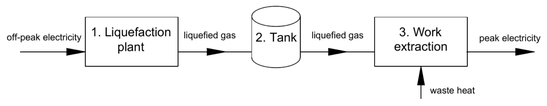

Figure 1. Cryogenic energy storage

Figure 1 illustrates the working principle of CES:

- first stage of the process is the gas liquefaction - the off-peak electrical energy is used to liquefy cryogen
- second stage is the storage of liquefied gas in tank
- the last stage is energy recovery - liquid cryogen is pumped to higher pressure, heated using ambient and waste heat (if available) and expanded in a turbine. All of mentioned stages are independent.

Cryogenic energy storage systems have several advantages in comparison with other long-term energy storage systems (PHS,CAES, batteries):

- no negative impact on environment,
- no specific location needed (no geological and topological constraints).

The CES technology cannot be considered as a mature one yet, however the main components used in CES systems have been used for many years in gas liquefaction and separation plants.

EXERGY OF SELECTED CRYOGENS

Most research on the cryogenic energy storage focuses on the liquid air energy storage, as atmospheric air is widely available and therefore it does not limit a location of the energy storage plant. Nevertheless, the CES with other gases as the working fluids can exhibit a higher efficiency. In this research a performance analysis of simple CES systems with several working fluids was performed. To calculate the maximum work that can be stored in liquefied gas per unit mass or per unit volume, the specific exergy and exergy densities of analysed cryogenic fluids were calculated and shown in the table.

Fluid	*e, kJ/kg*	*e, kJ/m³*
Air	740	647
Nitrogen	769	620
Oxygen	635	725
Argon	477	666
Methane[a]	1092	461

[a] no chemical exergy included for methane

ANALYSED CRYOGENIC ENERGY STORAGE PLANT

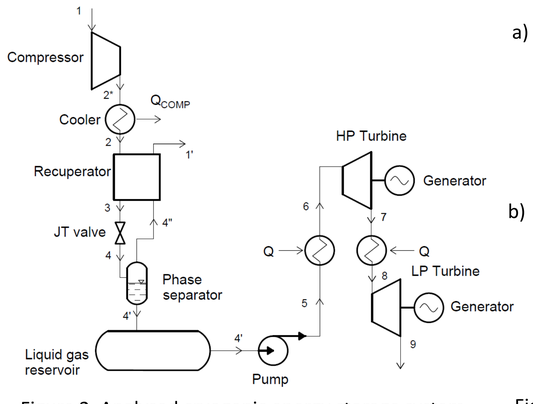

Figure 2. Analysed cryogenic energy storage system

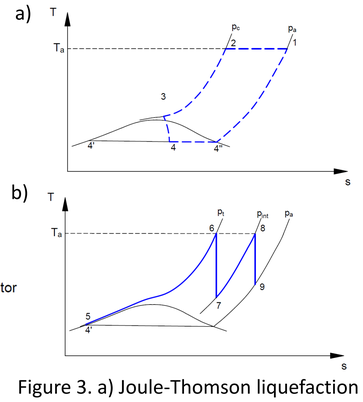

Figure 3. a) Joule-Thomson liquefaction cycle. b) direct expansion cycle

Parameter	Value
Temperature of gas at the inlet of liquefier (T_1)	293 *K*
Gas pressure at the inlet of liquefier (p_1)	0.1 *MPa*
Liquefied gas pressure (p_4)	0.1 *MPa*
Temperature at the turbine inlet ($T_6 = T_8$)	293 *K*
Pressure at the outlet of the last turbine stage (p_9)	0.1 *MPa*
Isentropic efficiencies of turbines and pump	100%

To compare mentioned cryogenic fluids, simple cryogenic energy storage system (figure 2) was considered. It consist of Joule-Thomson liquefaction facility, liquid cryogen tank (assumed to be ideal - heat inleaks were neglected) and power plant based on direct expansion cycle (with 2 turbine stages). Table above summarizes the simulation parameters. Liquefaction and expansion cycles of analysed plant are shown on figure 3.

RESULTS

To investigate different working fluids for cryogenic energy storage following values were compared:

- liquefaction efficiency,
- work recovery efficiency,
- energy storage efficiency.

The liquefaction efficiency (η_l) is the ratio of exergy contained in liquid cryogen and the energy needed to liquefy it:

$$\eta_l = \frac{e}{w_l} \tag{1}$$

Recovery efficiency (η_r) is the ratio of net work produced in cryogen expansion and the available exergy of liquid cryogen:

$$\eta_r = \frac{w_{net}}{e} \tag{2}$$

Finally, the storage efficiency (η_s) is the ratio of work of cryogen expansion and work of liquefaction:

$$\eta_s = \frac{w_{net}}{w_l} \tag{3}$$

Figures 4-6 presents mentioned efficiencies for selected cryogens in analysed CES system as a function of compressor discharge pressure (liquefaction efficiiency) and turbine inlet pressure (work recovery efficiency and energy storege efficiency). The energy storage efficiency was calculated assuming minimal liquefaction work obtained.

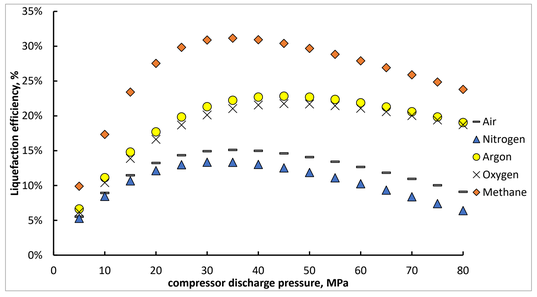

Figure 4. Liquefaction efficiencies of analysed cryogenic fluids

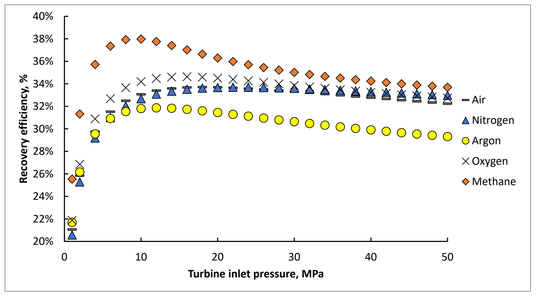

Figure 5. Work recovery efficiencies of analysed cryogenic fluids

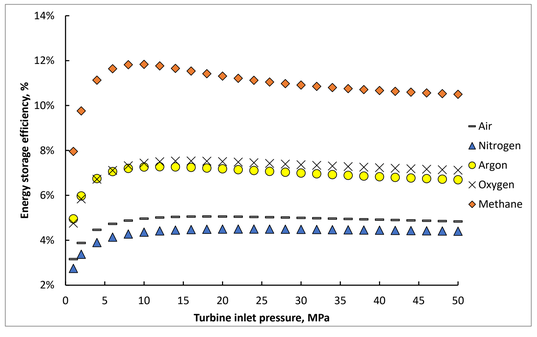

Figure 6. Energy storage efficiencies of analysed cryogenic fluids

CONCLUSIONS

Among the reviewed cryogenic fluids, methane had the highest recovery efficiency. Methane also has the highest liquefaction efficiency and therefore the storage efficiency. It means that processed natural gas can be promising working fluid in cryogenic energy storage systems. On the other hand, air is still very convenient working fluid, as it is available everywhere (therefore it does not limit the possible location of storage plant) for free and its thermodynamic properties are decent. Presented cryogenic energy storage system is very basic and its efficiency is very low, as the thermal exergy of cryogen is destroyed in heat exchanger. To increase the storage efficiency, cold from expansion cycle can be stored and used in liquefaction cycle in order to increase its efficiency or Organic Rankine Cycle or Brayton cycle can be incorporated, using cryogen as low temperature heat source. The most important problem to be solved in further research is to determine the best way of utilizing the thermal exergy of cryogen.