PSB RF bypasses

On behalf of:

J. Bento - Taking over the responsibility of the RF-bypasses

F. Chapuis - In charge of the RF-bypasses since 2000

J. Hansen – Design of the bypasses in the injection line

B. Riffaud – Design of the bypasses in the injection line

L. Zuccalli – Design of the bypasses in the injection line

PSB RF bypasses

Executive summary:

- For the new injection line, 24 new collars including 76 new rf-bridges are presently being produced. It will then require 20 man-days on the rf side for preparation work + installation + tests

- For the PSB ring excluding the injection region, the existing 128 existing PSB isolated vacuum collars just need the reception of 500 little ceramic boards in order to be changed to cope with an expected 2.5 E13 ppp beam

- This change still implies around 50 man-days on the rf side + unknown effort on the vacuum side

- The maximum intensity is now specified at 1.6 E13 instead of 2.5 E13 after LS2. So in order to avoid a useless effort, a test needs to be carried out to check if the present bypasses could handle 1.6 E13 ppp without a change

PSB RF bypasses

- 128 special vacuum collars installed downstream the bendings
- 100 spares without metallic paint and R-C circuit (handled by TE-VSC and P. Demarest)
- 500 new ceramic circuits to be ordered

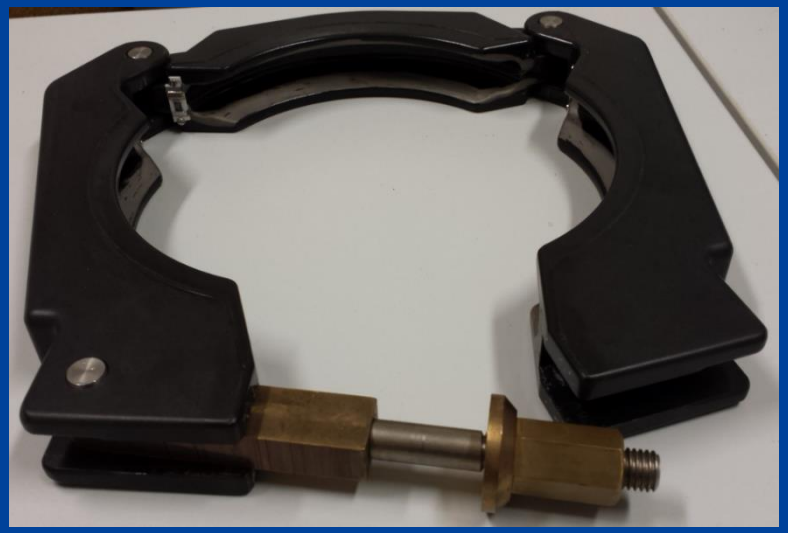

3 times
0.5Ω in series
with
4 x 100nF //

=> 384 circuits

PSB RF bypasses

In the injection region:

24 new special vacuum collars including 76 special rf bridges

Production launched

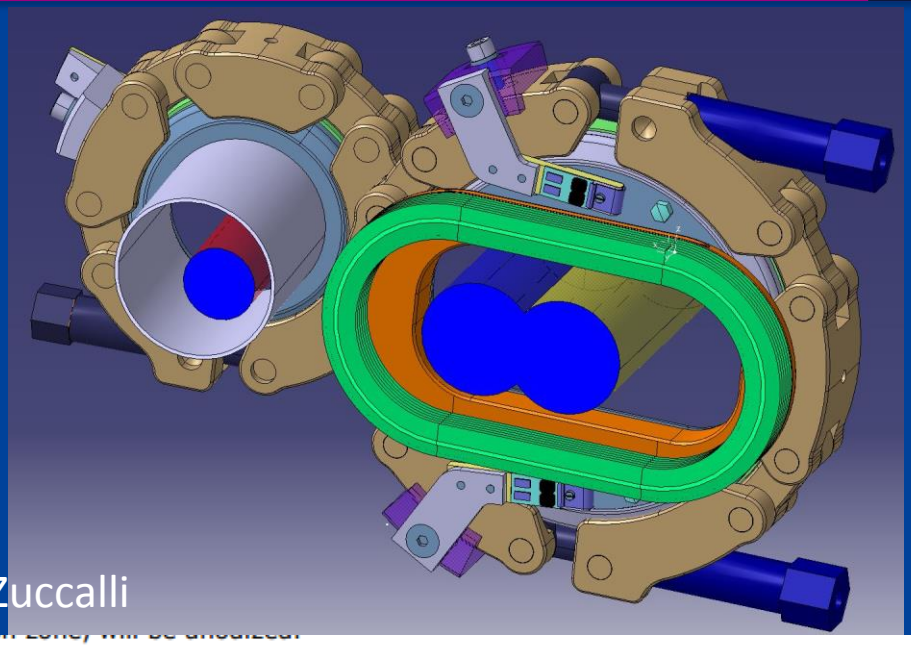

Courtesy L. Zuccalli

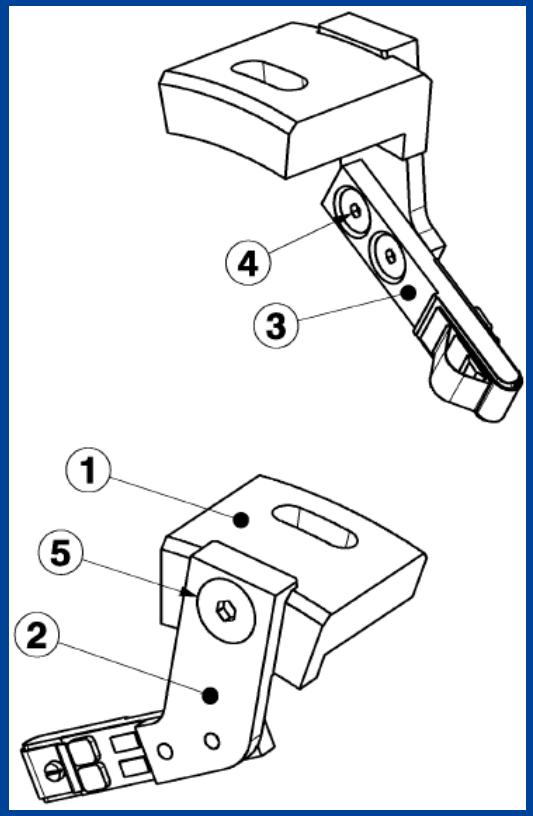

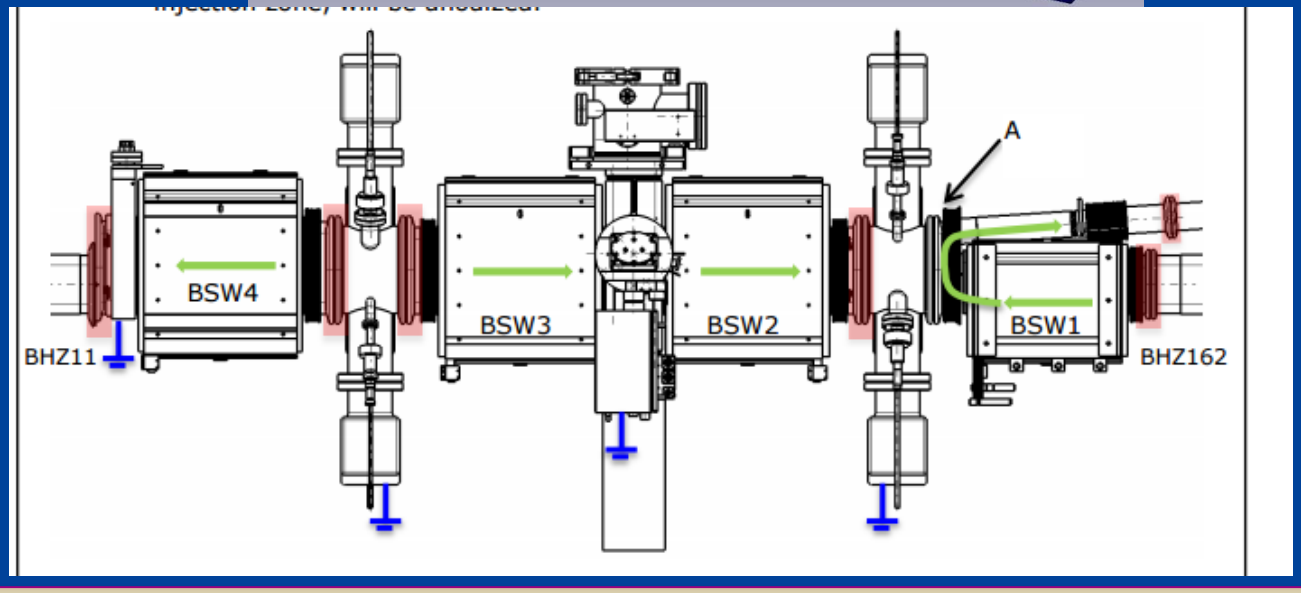

PSB RF bypasses

In the injection region:
24 new special vacuum collars including 76 special rf bridges

Production launched

Delivery: Jan 2017

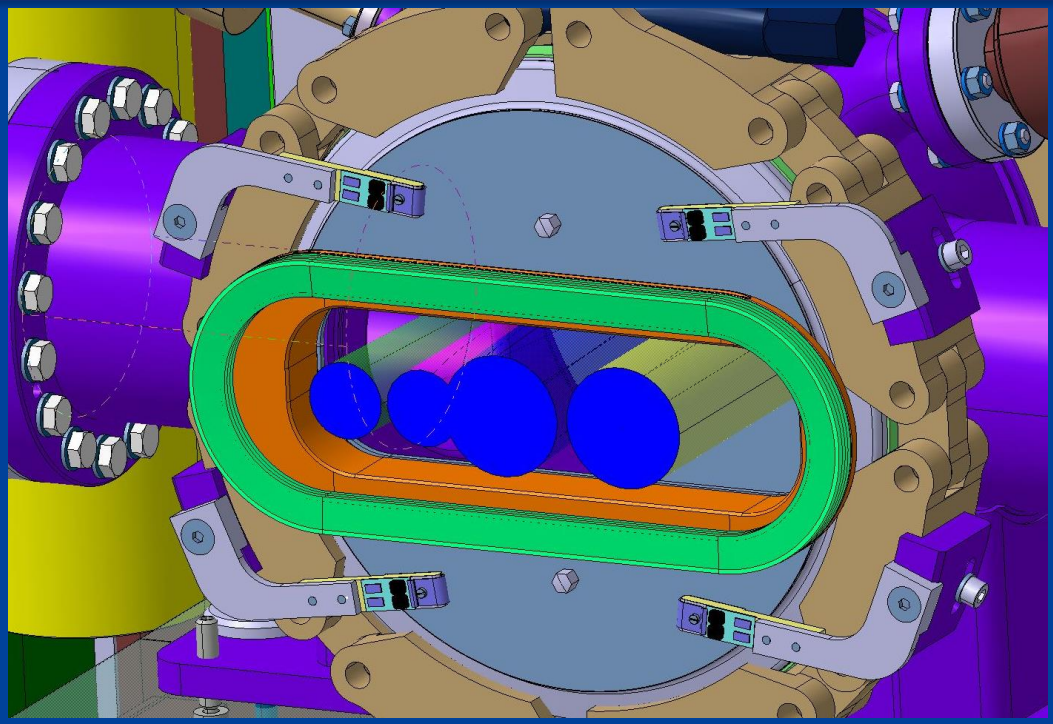

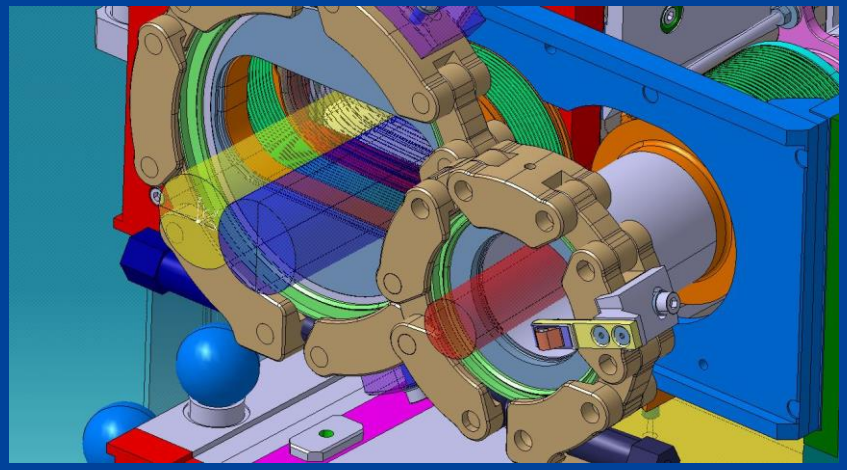

The rf bypasses have to deal with:

I_{beam} = 48 A_p with 2.5 E13 ppp

I_{beam} = 31 A_p with 1.6 E13 ppp

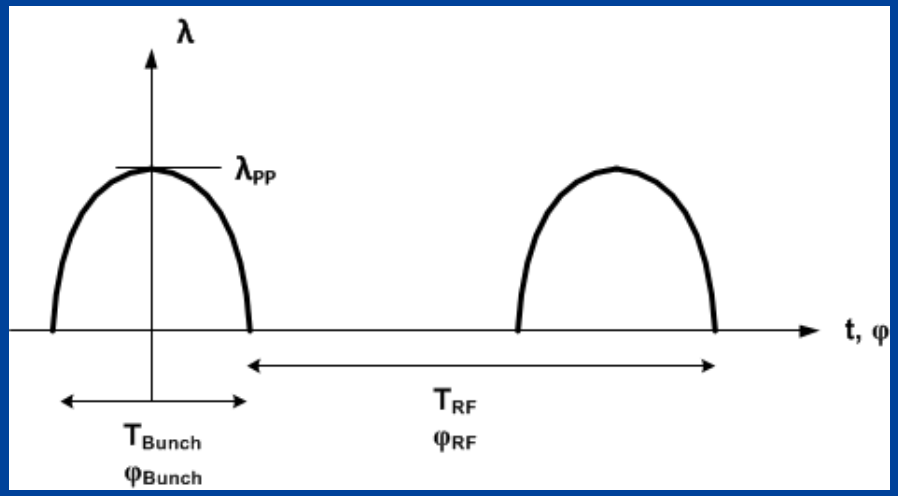

The Max peak beam intensity will be considered with 2.5E13 ppb and 130 ns bunch length

$$I_{beam\ peak\ Linac\ 4\ at\ ej} = \lambda_{pp\ ej} = \frac{\pi}{2} \cdot \frac{Q_{Bunch}}{T_{Bunch}} = \frac{3.14 \cdot 2.5 \cdot 10^{13} \cdot 1.6 \cdot 10^{-19}}{260 \cdot 10^{-9}} = 48 A_p$$

PSB RF bypasses

For the resistor, we need:

0.5 Ω resistor – as presently

0.5 W in continuous mode – 1W presently mounted

1150 W in pulsed mode (48A_p and 24 V_p) – unknown specification for the present resistors

Dimensions compatible with present setup

PSB RF bypasses

The present resistors - 0.5Ω /1 W – are (were) supposed to stand at least 1.4 A (for 1W) < 48 A

No detailed specifications found for peak surges… but at least they did cope with the present centered beam => 4.6 A with 1E13 ppp and 180 ns bunch length

PSB RF bypasses

Some resistors are specified for pulsed power.

Here below is the resistor that has been selected

The length of this resistor (3.2x2.5x0.45mm) is half of the one used at present (6.5x3.2x0.42 mm)… so is the power (0.5 W instead of 1W)

VISHAY www.vishay.com/docs/20024/dcrcife3.pdf **D/CRCW-IF e3**

Vishay

Pulse Proof Thick Film Chip Resistors

DIMENSIONS

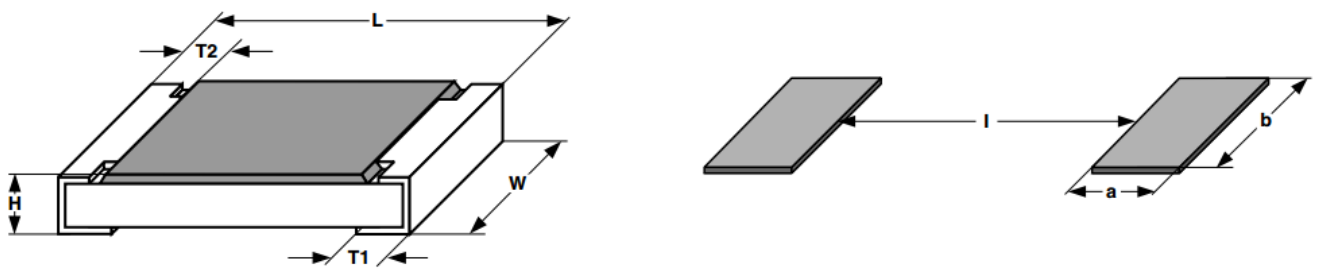

SIZE		DIMENSIONS in millimeters					SOLDER PAD DIMENSIONS in millimeters					
							REFLOW SOLDERING			WAVE SOLDERING		
INCH	METRIC	L	W	H	T1	T2	a	b	l	a	b	l
1210	3225	3.2 ± 0.2	2.5 ± 0.2	0.55 ± 0.05	0.45 ± 0.2	0.4 ± 0.2	0.9	2.5	2.0	1.1	2.5	2.2

PSB RF bypasses

www.vishay.com/docs/20024/dcrcife3.pdf **D/CRCW-IF e3**

Vishay

Pulse Proof Thick Film Chip Resistors

STANDARD ELECTRICAL SPECIFICATIONS

MODEL	CASE SIZE	SIZE METRIC	POWER RATING $P_{70\,°C}$ W	LIMITING ELEMENT VOLTAGE $U_{max.}$ AC/DC	TEMPERATURE COEFFICIENT ppm/K	TOLERANCE %	RESISTANCE RANGE Ω	SERIES
CRCW1210-IF	1210	RR 3225M	0.50	200	± 200	± 5, ± 10	1R0 to 100K	E24

Maximum pulse dissipation as a function of the pulse duration, continuous pulse loading

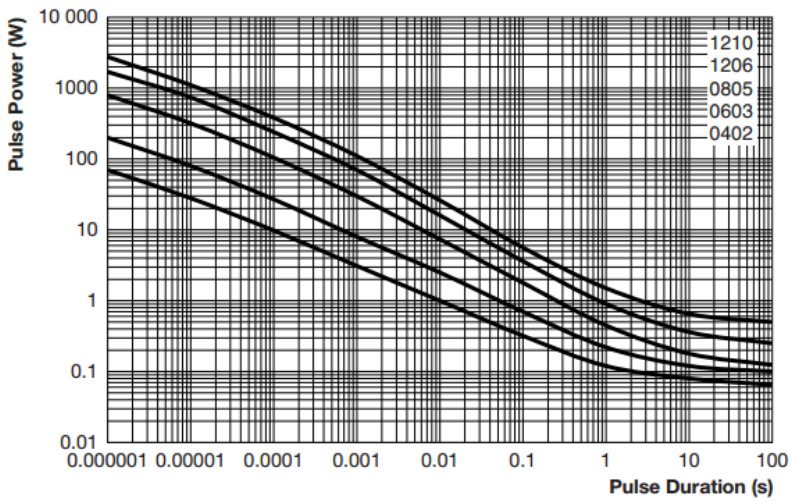

Maximum pulse load, continuous pulses; applicable if $\hat{P} \leq P(\vartheta_{amb})$ and $\hat{U} \leq \hat{U}_{max.}$; for permissible resistance change equivalent to 8000 h operation

This resistor can stand 3000 W during 1 us (1150 W required during 130 ns)
It can stand 0.5 W CW – as required – but still we will install 2 in //

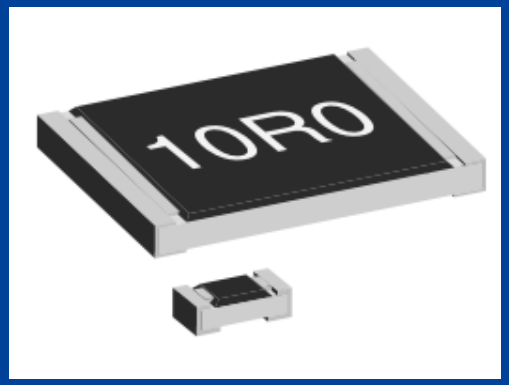

PSB RF bypasses

Successful test (J. Bento) in the PS with a peak current of 100 A
(48 A needed in the PSB with 2.5E13, 31 A with 1.6 E13)

PSB RF bypasses

Summary:

- The design of RF-bypasses (L. Zuccalli) in the new injection line has been completed and the production has started (delivery in Jan 2017). There is still 20 man-days to be invested for the installation and test on the rf side.

- New resistors for the PSB rf-bypasses have be tested with success in the PS (J. BENTO) with 100 A (48 A or 31A required)

- 50 man-days + ordering of 500 ceramic boards is required for the PSB upgrade (excluding the injection line) on RF side only – vacuum not included .

- A test on the present bypasses' resistors should show if the latter change is required assuming a lower beam intensity (1.6 E13 instead of 2.5 E13) – New bypass to be installed in the PS during the following 2016-17 EYETS

PSB RF bypasses

References:

Past measurements made by F. Chapuis
\\cern.ch\dfs\Users\c\chapuisf\Public\

Preparation manual for the 128 collars by F. Chapuis
https://edms.cern.ch/ui/#!master/navigator/document?D:1385242604:1385242604:subDocs

Mechanical project for the injection line by L. Zuccalli,
Accessible using: Smarteamv -> project ST0731260

PSB RF bypasses

http://cds.cern.ch/record/447073/files/ps-2000-025.pdf

REDUCTION OF THE IMPEDANCE CREATED BY THE INSULATED VACUUM FLANGES IN THE PS BOOSTER

A. Blas, M. Chanel, C. Carli, C. Lacroix

http://cds.cern.ch/record/960437/files/cer-002626722.pdf

Coupling Impedance Measurements with the Coaxial Wire Method on the CPS RF Bypass

J. Bento, F. Caspers, A. Mostacci

http://indico.cern.ch/getFile.py/access?contribId=0&resId=1&materialId=slides&confId=59490

Measurements on the RF Bypass in SS89 in the PS

J. Bento, H. Damerau