# The CMS ECAL data acquisition system

*Author: Giacomo Cucciati,*
*on behalf of the CMS ECAL collaboration*

*CHEP 2018,*
*Sofia 9-13 July*

The CMS electromagnetic calorimeter (ECAL), composed of scintillating lead tungstate crystals, is aimed at precisely measuring the energies of electrons and photons. In addition, a preshower detector, made of silicon sensors, is used to distinguish prompt photons from pi0 decays to photons in the endcaps.

## ECAL General Schema

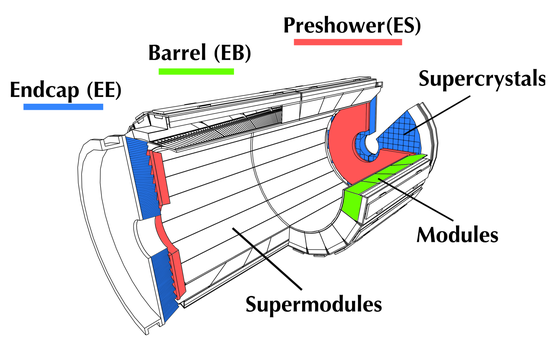


Main partitions:
- Endcap (18 FED)
- Barrel (36 FED)
- Preshower (40 FED)

ECAL is divided in FED (Front End Drivers) with further sub-grouping down to single channels. This modularity is reflected in the power supply system, electronics and data acquisition: it allows a fine grain control and configuration + easier hardware maintenance.

## EB+EE Front End Schema

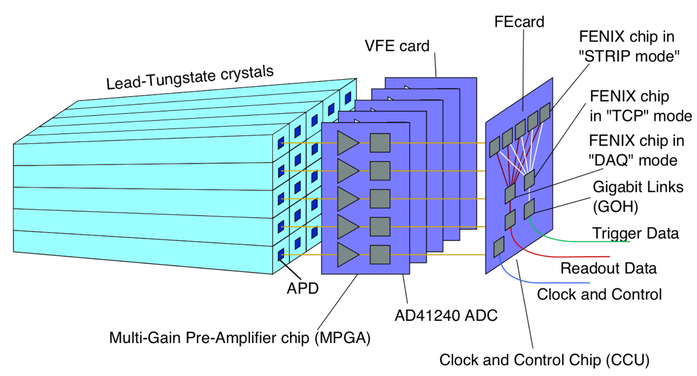


FE subunits:
- 5 crystals (called a *strip)* are controlled by a VFE Card.
- 5 strips (called a *supercrystal)* share the same FE Card.

VFE Card:
- amplify the signal with highest non-saturating gain (x1 - x6 - x12).
- sample and digitalise signals at 40 MHz (LHC clock) and 12 bit resolution.

FE Card:
- sum the signals per strip and apply a peak finder;
- implement the algorithm for trigger primitive generation;
- buffer samples of the 25 crystals, ready to send them out if marked as important by CMS main trigger.

## EB+EE Fast communication

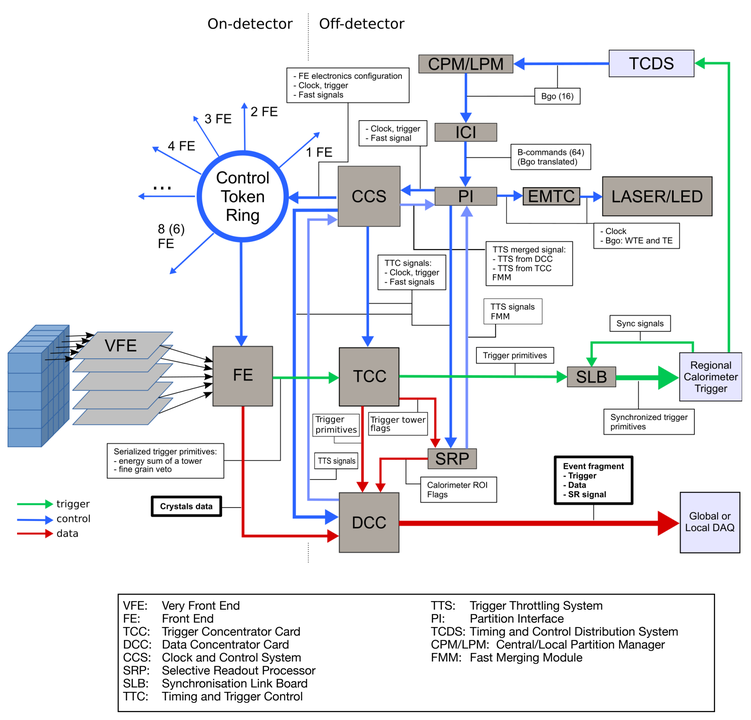


VFE: Very Front End
FE: Front End
TCC: Trigger Concentrator Card
DCC: Data Concentrator Card
CCS: Clock and Control System
SRP: Selective Readout Processor
SLB: Synchronisation Link Board
TTC: Timing and Trigger Control
TTS: Trigger Throttling System
PI: Partition Interface
TCDS: Timing and Control Distribution System
CPM/LPM: Central/Local Partition Manager
FMM: Fast Merging Module

**Trigger path:**
- the trigger primitives generated by the FE are sent to the TCC board at each LHC clock.
- the TCC analyses TPs considering energy, rate and neighbour crystals values.
- TCC sends ECAL trigger decisions to LV1 (former Regional Calorimeter Trigger) after oSLB time alignment.

**Control path:**
- Fast signals like L1A or start&stop commands are distributed by TCDS to all of the sub-systems.
- CCS boards spread the signals inside ECAL on-detector and off-detector.
- Laser synchronisation is driven by a sequence of fast signals to fire in the abort gap.

**Data path:**
- L1A distributed in ECAL DAQ system activate the data collection.
- DCC create an events, readin the raw data from the FE and adding information like the trigger primitives.
- Raw data can be filtered on SRP decision depending on the energy deposit in the TT.

## ES Fast communication

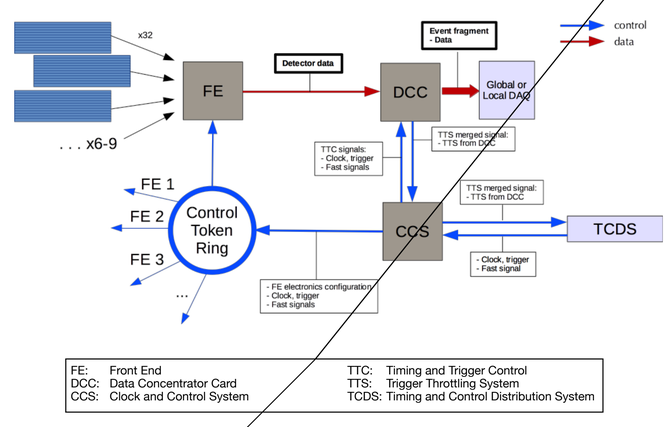


FE: Front End
DCC: Data Concentrator Card
CCS: Clock and Control System
TTC: Timing and Trigger Control
TTS: Trigger Throttling System
TCDS: Timing and Control Distribution System

Preshower DAQ system is simplified since the detector does not participate to the generation of the triggers.
- The CCS boards distribute LHC clock and TCDS fast commands to the FE and DCC.
- At each L1A, the FE provides raw data from the silicon strips to the DCC boards.
- The DCC merges them and sends the event fragments the local or central CMS DAQ system.

## ECAL DAQ Software

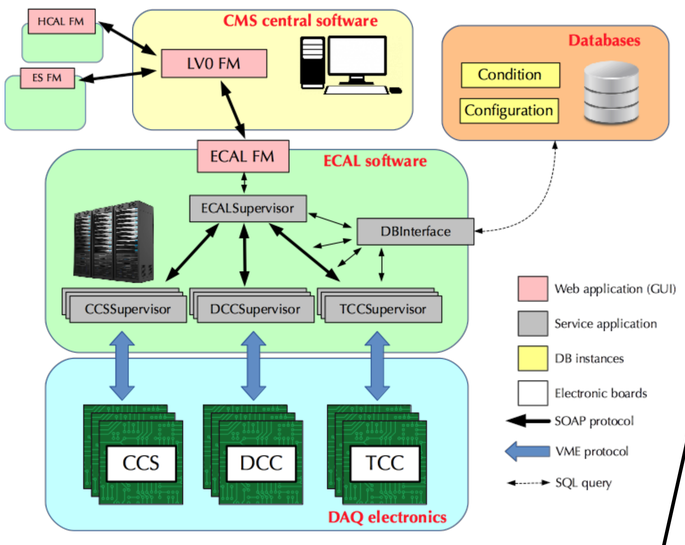


ECAL software controls the steps of data acquisition and configures the electronics with parameters depending on the runs (collisions, cosmics, etc…).
It has a hierarchical structure:
- Central CMS user interface (LV0) controls the acquisition run and communicates with the Function Managers of each sub-system.
- Commands (*Configure*, *Start*, …) are sent down to the ECALSupervisor and through it to the Resources Supervisors, interface-applications for the electronic boards.

Function managers are Java applications while the Supervisors are C++ classes based on XDAQ libraries. An Oracle database is used to store configuration parameters.

## Auto-Recovery procedure

- SEU (Single Event Upset): error in the OD-electronics induced by radiation and causing a block of the DAQ.
- Developed a software auto-recovery mechanism where supervisors recognise the error and reconfigure the hardware.
- The L1A flow is paused and resumed during the recovery action using specific inter-applications communication
- Main advantage: The run is paused for ~20 seconds instead of stopping and restarting a new run after a full hardware reconfiguration which takes ~3 minutes

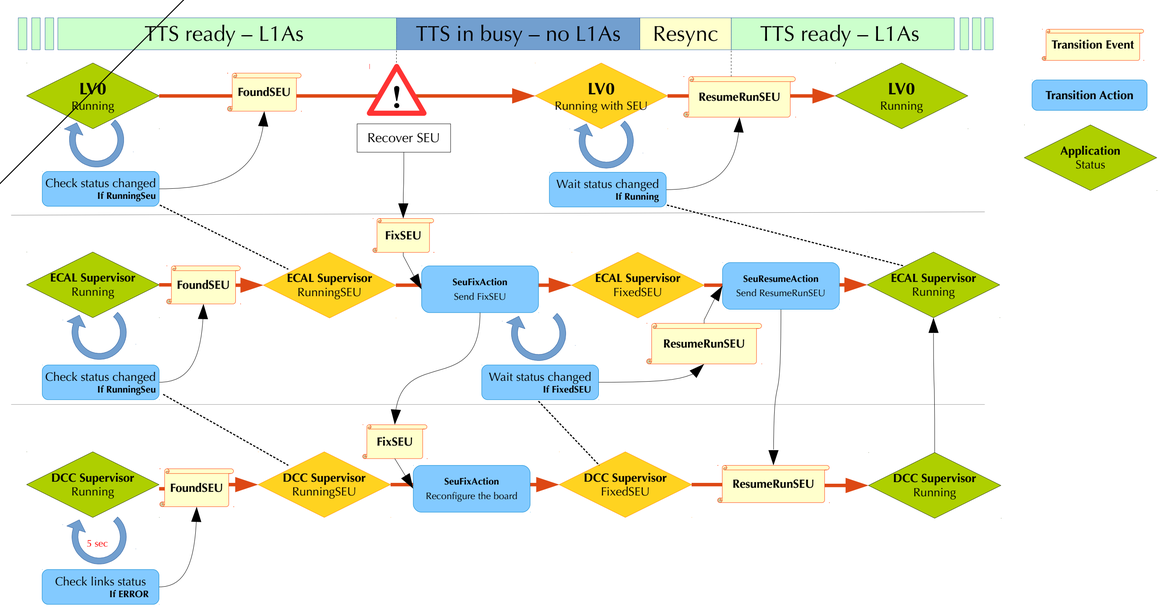


## Performance

Errors in the DAQ hardware or software cause luminosity losses.
- In recent years, the auto-recovery procedure has been updated to intercept also off-detector electronics errors.
- An automasking system of unrecoverable channels has been deployed in 2017 for ES and in 2018 for EB+EE.
- Improvements in the efficiency of the ECAL DAQ system can been noted comparing 2016-2017 downtime.

| Year | LHC delivered ($fb^{-1}$) | CMS recorded ($fb^{-1}$) | ECAL DAQ - induced losses EB/EE + ES ($pb^{-1}$ (% of LHC delivered) ) |
|---|---|---|---|
| 2016 | 41.07 | 37.82 | 237.12 + 189.23 (0.6% + 0.5%) |
| 2017 | 50.25 | 45.39 | **151.57 + 45.12 (0.3% + 0.09%)** |

References:
- Pasquale Musella Ph.D. Thesis CMS TS-2011-50 CERN-THESIS-2010-240 (2010)
- XDAQ: https://svnweb.cern.ch/trac/cmsos
- CMS Lumi: https://twiki.cern.ch/twiki/bin/view/CMSPublic/LumiPublicResults
- CMS TDR 8.1, "Detector Performance and Software, Physics Technical Design Report, Volume I ". February 2006

Acknowledgments
Special thanks to all of the members of the CMS ECAL group