SYSTEM INTEGRATION IN THE MODULE

A. Samoshkin
16-Sep-2009

CLIC Two-Beam Module review
September 2008

CLIC MODULE

Alexandre.Samochkine @ cern.ch

Module design is based on two-beam acceleration idea, where the RF power is generated by a high current e-beam (DB) running parallel to the MB. This drive beam is decelerated in special power extraction structures (PETS) and the generated RF power is transferred to the main beam (AS).

Each system must be compatible with others, which makes both, the design and integration complex & challenging.

Baseline and alternative solution/s are being studied for each component of the technical system.

Many issues appear often during integration.

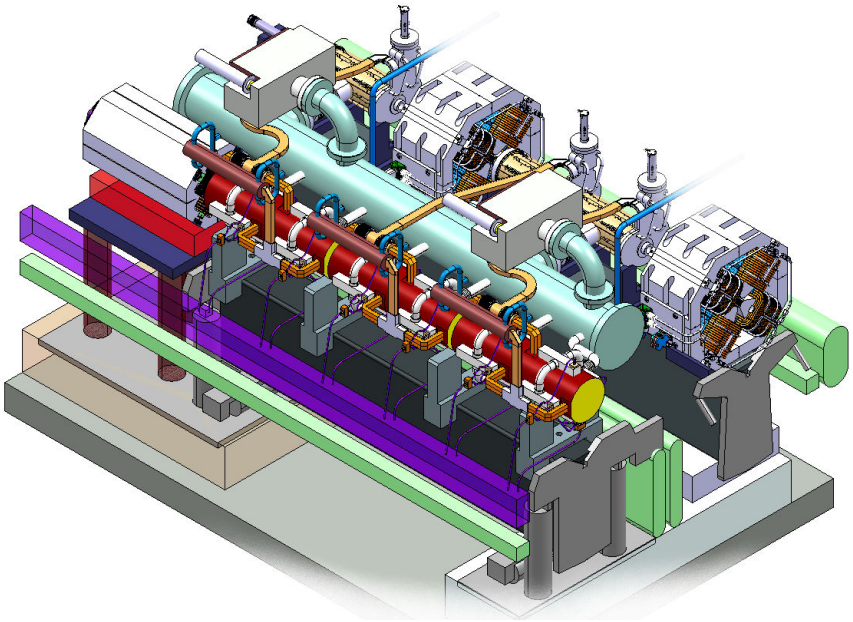

MODULE TYPES

Alexandre.Samochkine @ cern.ch

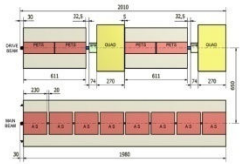

Standard Module
8374 per Linac

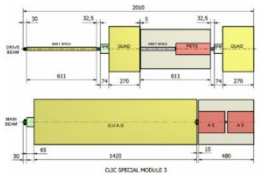

Module Type 3
477 per Linac

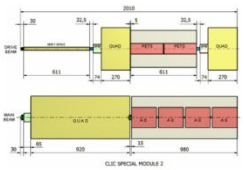

Module Type 2
634 per Linac

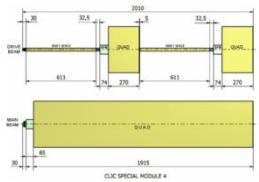

Module Type 4
731 per Linac

CLIC Module Type1
154 per Linac

2 configurations are under study

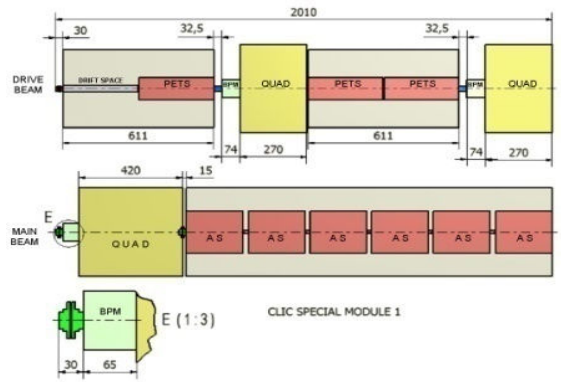

Tank Version

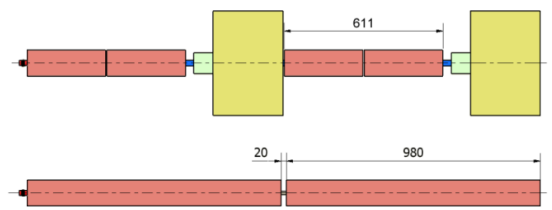

Sealed Version

DB (100 A)

4 PETS, 2 Quads with BPM

Each PETS powers 2 AS

MB (1 A)

8 acc. structures

Main beam filling factor: 91%

AS: based on CLIC "G" disk damped (sealed version) (250 mm including 20 mm for interconnection)

+ special modules

Alexandre.Samochkine @ cern.ch

CLIC SYSTEMS

- R F
- MAGNET
- INSTRUMENTATION
- COORDINATE
- SUPPORTING
- ALIGNMENT AND STABILIZATION
- BEAM FEEDBACK
- VACUUM
- COOLING
- ASSEMBLY, TRANSPORT, INSTALLATION

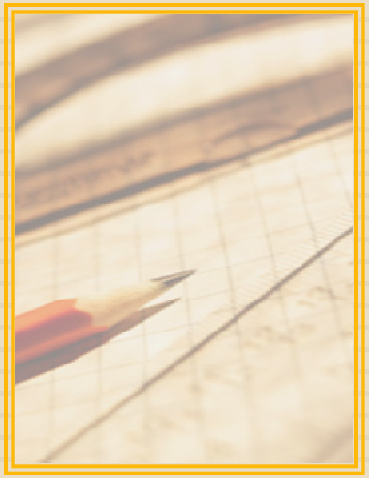

COORDINATE SYSTEM

CLIC COORDINATE SYSTEM

Alexandre.Samochkine @ cern.ch

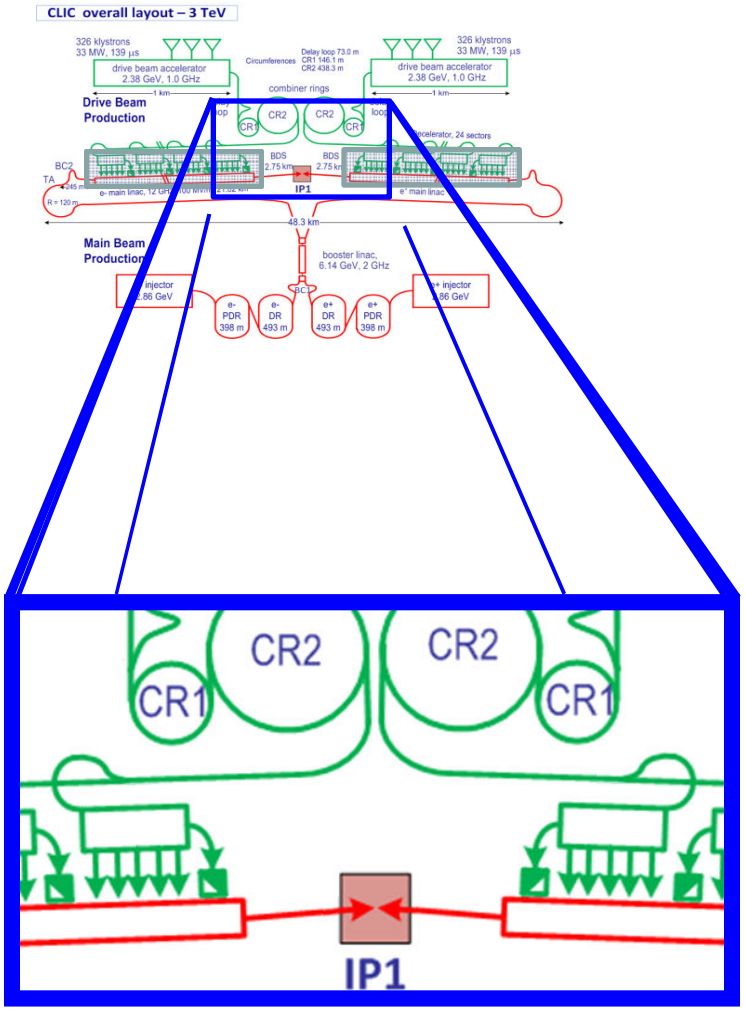

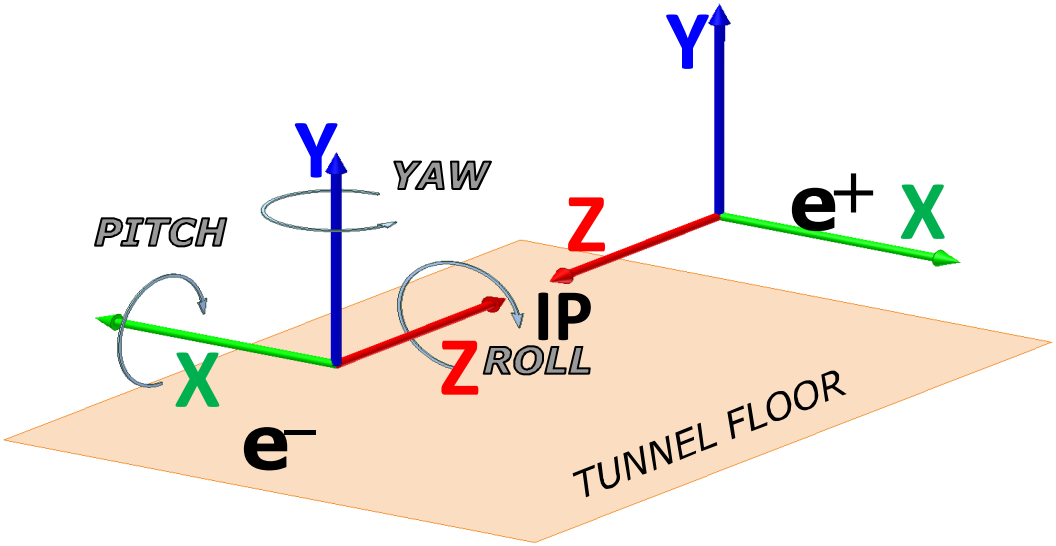

Two modules of **e+** and **e-** type

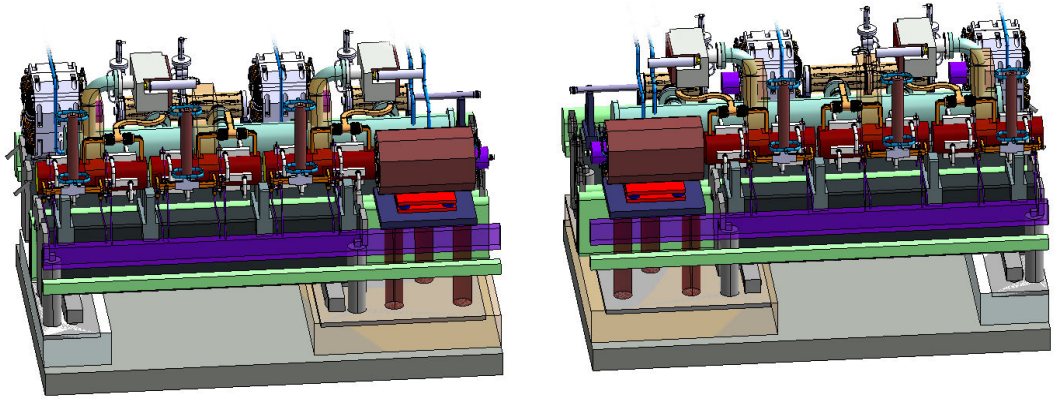

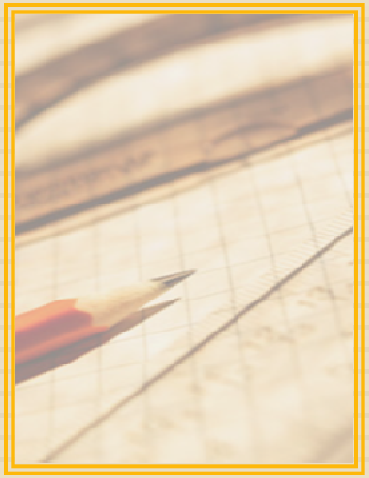

R F SYSTEM

AS INTEGRATION

Alexandre.Samochkine @ cern.ch

The design of the AS is driven by extreme performance requirements.
The shape accuracy is relatively high (0.005 mm).
Several features of different systems, such as vacuum, cooling, WFM have to be incorporated into design. The damping waveguide loads are in between of them.

Two AS forming one Super-Structure
(Ø 140 mm, L=2*230+20=480 mm)

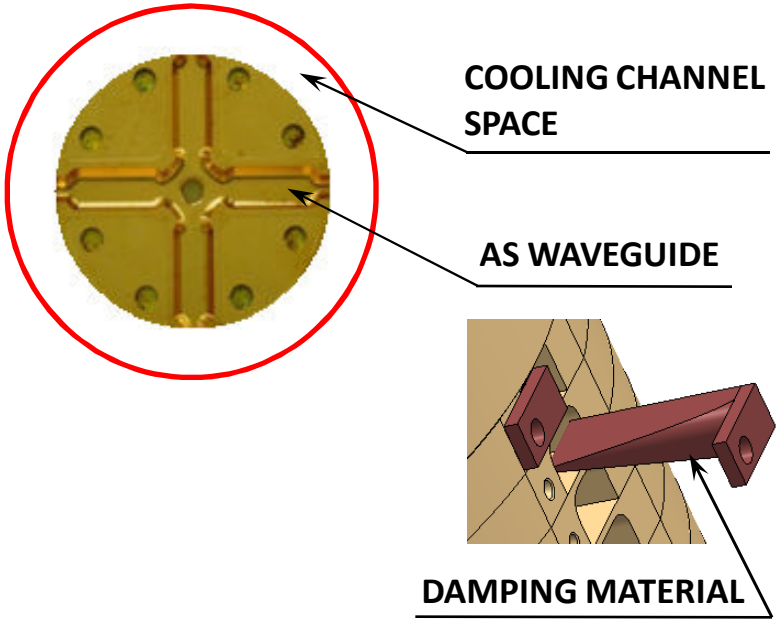

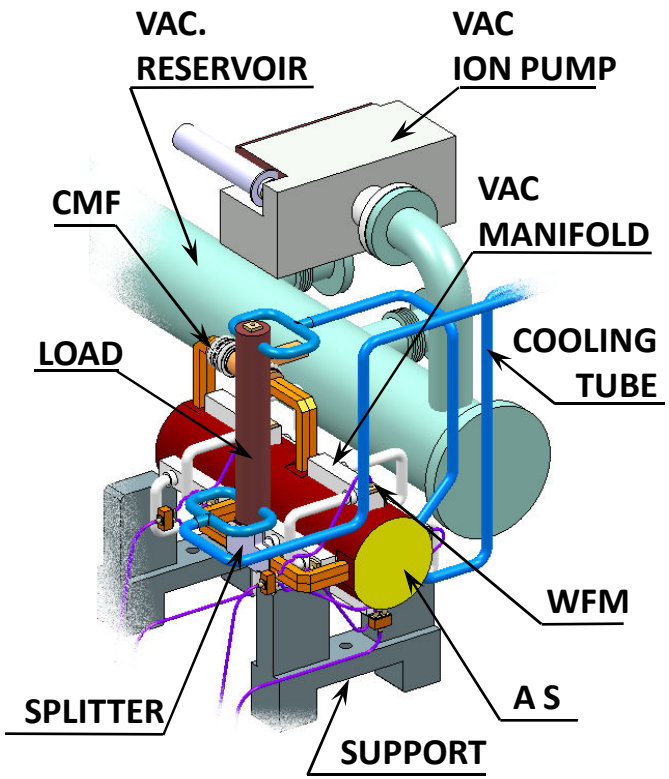

Detailed design under way

PETS INTEGRATION

Alexandre.Samochkine @ cern.ch

PETS OCTANT (SINGLE BAR)

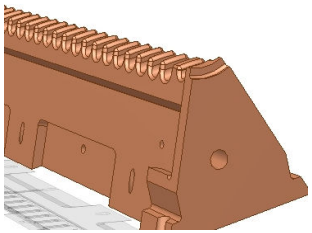

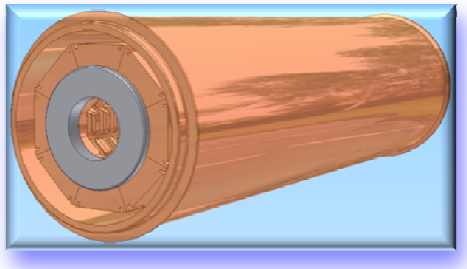

ASSEMBLED IN MINI-TANK

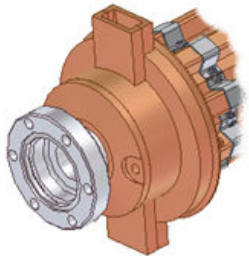

EQUIPPED WITH COUPLERS

JOINED WITH AS VIA WAVEGUIDES & CHOKE MODE FLANGE

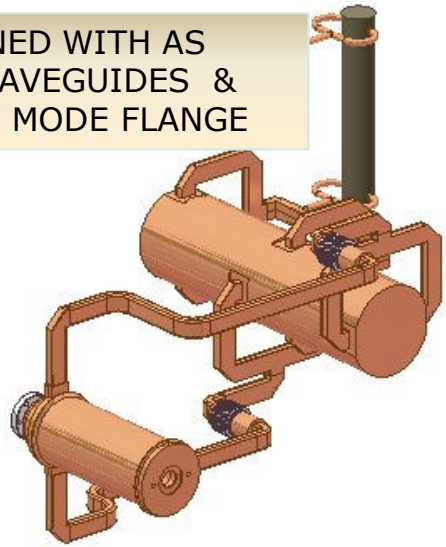

The octants assembly, mini-tank, on-off mechanism, vacuum system, cooling circuits, interconnection & supports are the subjects for integration

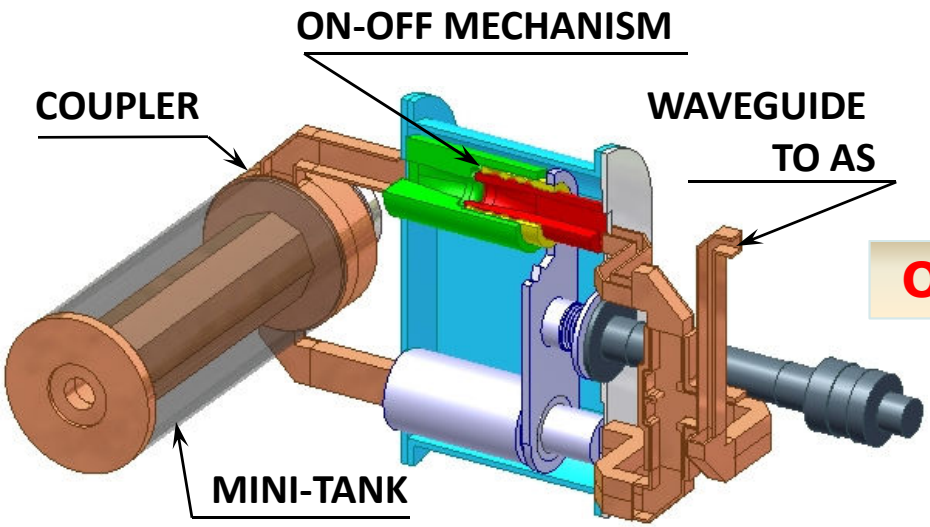

OLD

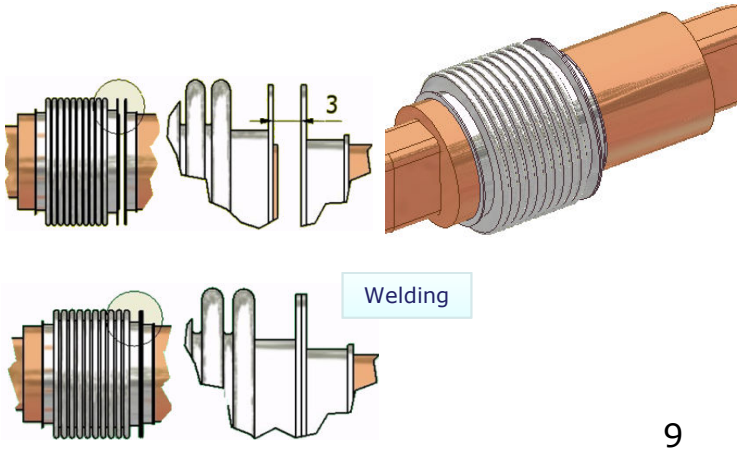

PETS INTEGRATION

Alexandre.Samochkine @ cern.ch

PETS **"ON-OFF"** MECHANISM COMBINED WITH COMPACT COUPLER

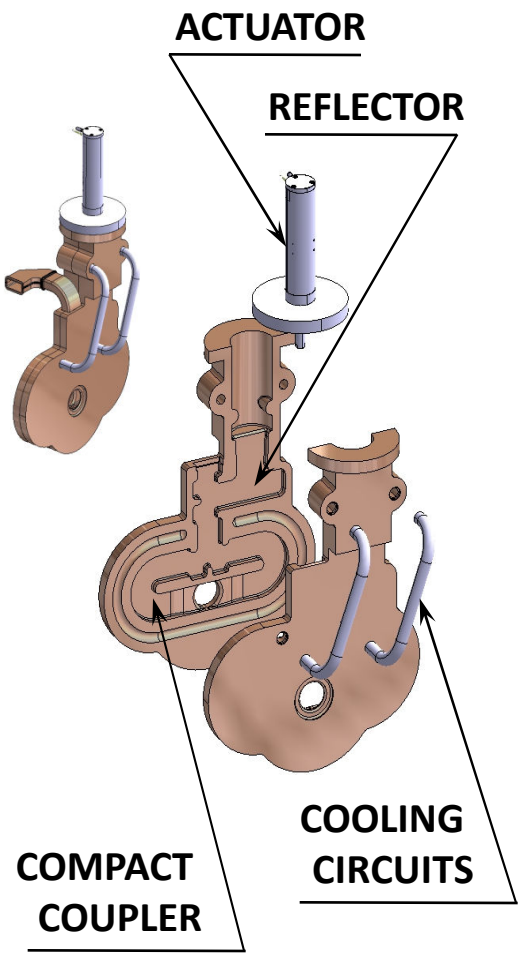

NEW

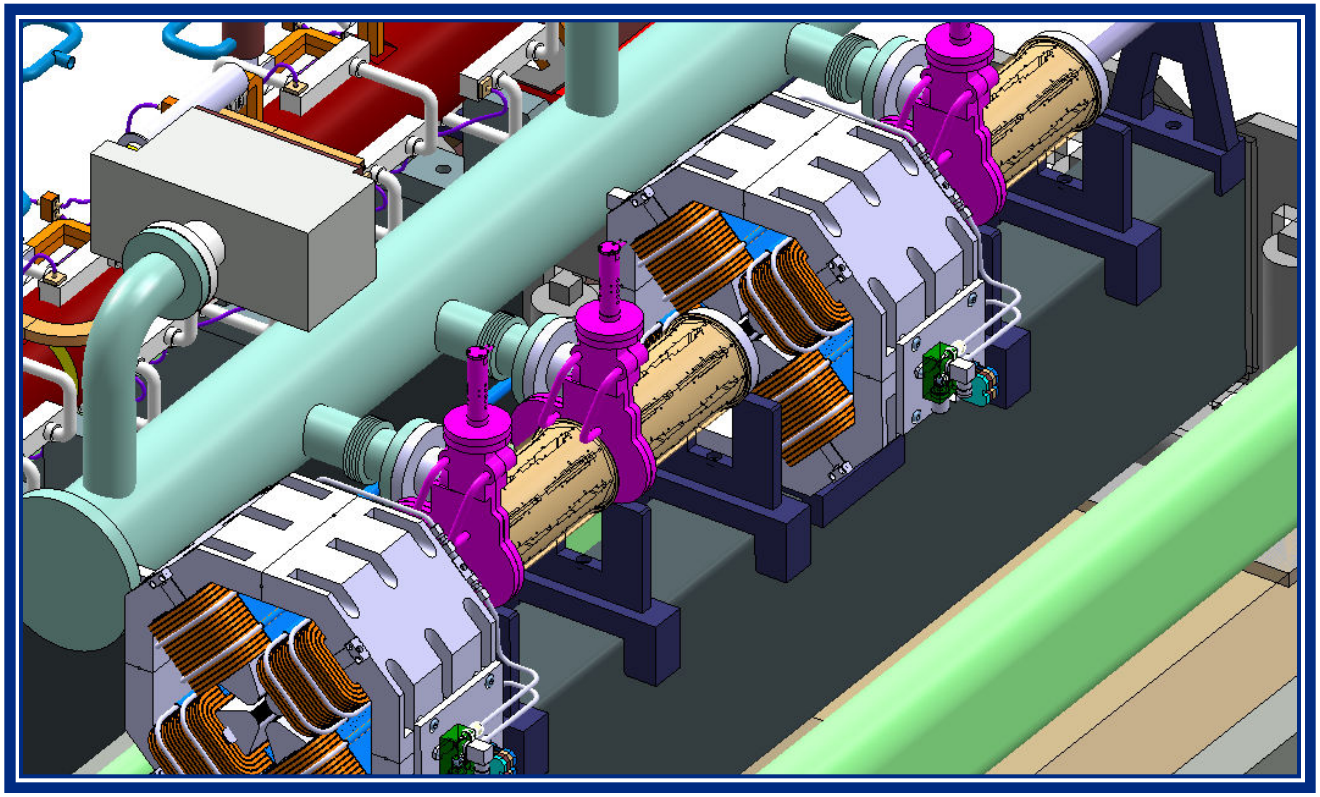

CHOKE MODE FLANGE

Alexandre.Samochkine @ cern.ch

PETS **(A)** and AS **(B)** are connected via waveguides and choke mode flanges (CMF). CMF allows the power transmission without electrical contact between waveguides. This device should be flexible in order to permit independent alignment of two waveguides.

Requirements:
Waveguide interconnections between PETS and AS via CMF:

X – shift:	± 0.25 mm
Y – shift:	± 0.5 mm
Z – shift:	± 0.5 mm
Twist:	< 5°

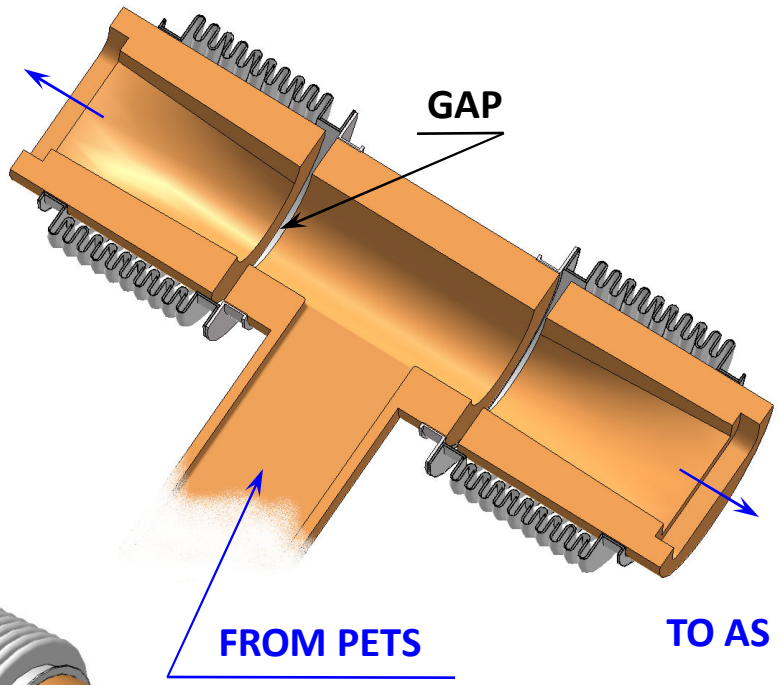

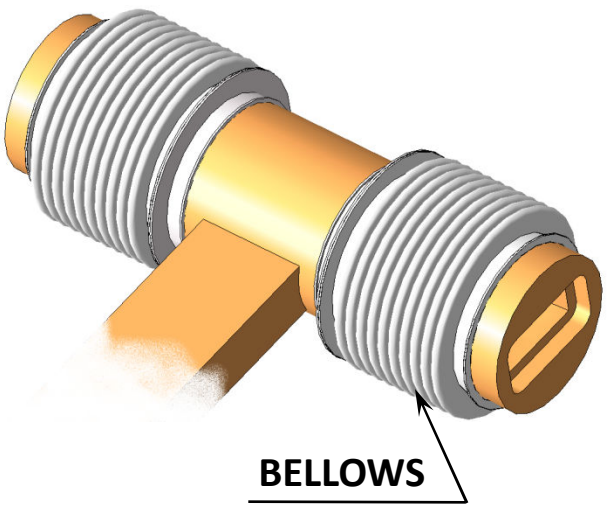

CHOKE MODE FLANGE ("HAMMER")

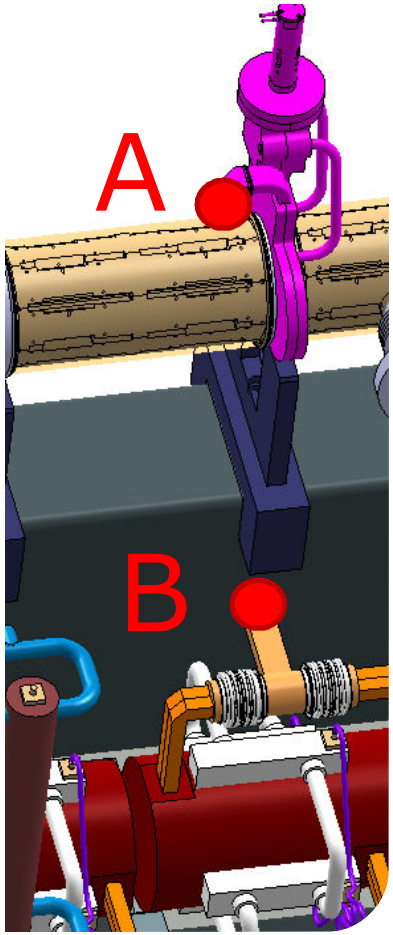

RF NETWORK DESIGN

Alexandre.Samochkine @ cern.ch

Waveguide length optimization is based on losses, phase advance and RF to beam timing considerations.

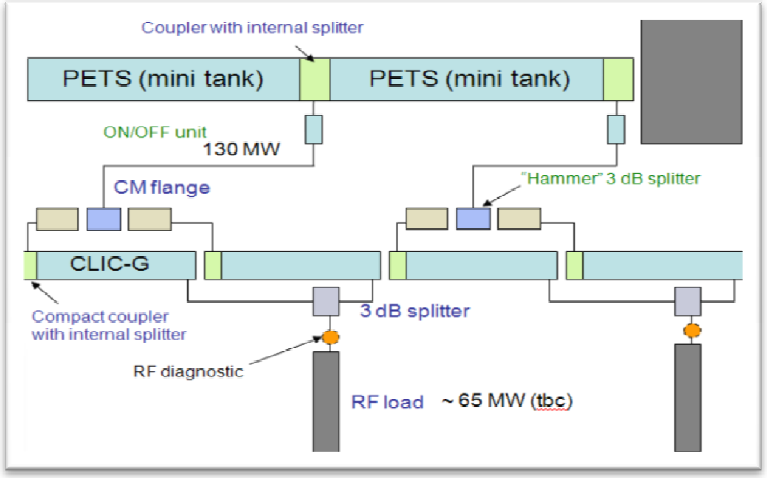

	A	B	C	D	E	F	G
1		WAVEGUIDE					
2		a		2.29E-02	m		
3		c		2.998E+08	m/s	Speed of Light	
4		f		1.1994E+10	Hz	CLIC frequency	
5		λ_0		2.50E-02	m	CLIC wavelength (c/f)	
6		λ_{cutoff}		0.04572	m	= 2 x a	
7							
8		WAVELENGTH					
9		λ_{wg}		2.985110E-02	m	$\lambda_{wg} = \frac{c}{f} \times \frac{1}{\sqrt{1-\left(\frac{c}{2a \cdot f}\right)^2}}$	
10							
11							
12		GROUP VELOCITY					
13		vg		2.51E+08	m/s	$vg = c \times \sqrt{1-\left(\frac{c}{2a \cdot f}\right)^2}$	
14		vg/c		8.37328E-01			
15							
16							
17		WAVEGUIDE LENGTH					
18		L_{as}		0.25	m	AS Length	
19		L_{as} x vg/c		2.09E-01	m		
20		Delay		8.339E-01	ns	$\frac{L_{as}}{c} \times 10^9$	
21		$L_2 - L_1$	$= L_{as}$ x vg/c	2.09E-01	m	= n x λ_{wg}	
22		n		7.0125E+00			
23		n real		7.0000E+00			
24		$L_2 - L_1$ corr		2.089577E-01	m	208.957	mm
25			ERROR	-1.490973E-03	ns		

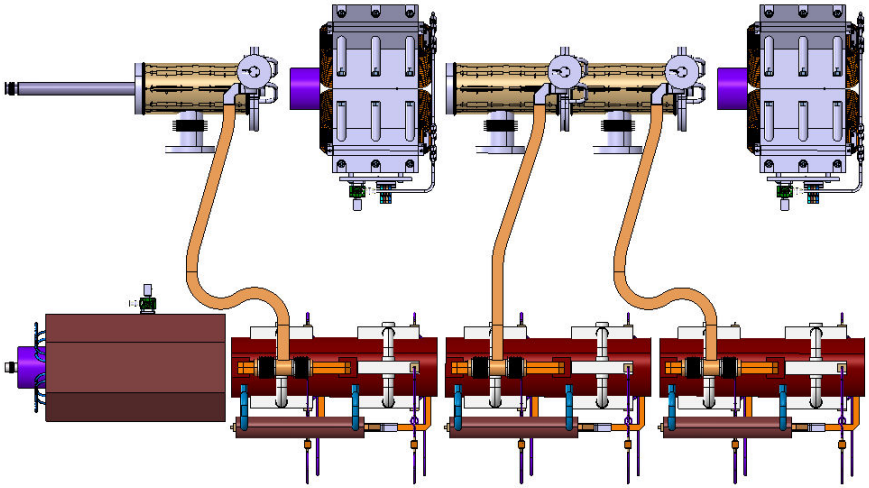

442.541	1st waveguide length			
$L1_1$ =	442.541	1	PETS 1	wg1
$L2_1$ =	651.498	2		wg2
$L1_2$ =	592.512	1	PETS 2	wg3
$L2_2$ =	801.469	2		wg4
$L1_3$ =	442.541	1	PETS 3	wg5
$L2_3$ =	651.498	2		wg6
$L1_4$ =	592.512	1	PETS 4	wg7
$L2_4$ =	801.469	2		wg8

The breakdown detectors must be integrated

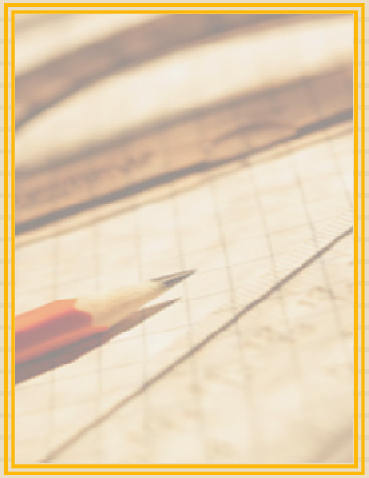

INSTRUMENTATION

BEAM POSITION & WAKE FIELD MONITORS

Alexandre.Samochkine @ cern.ch

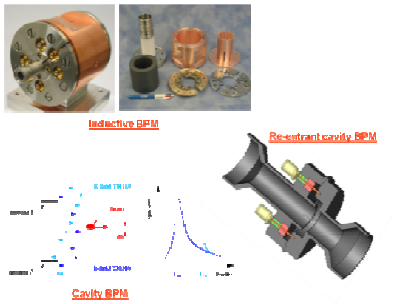

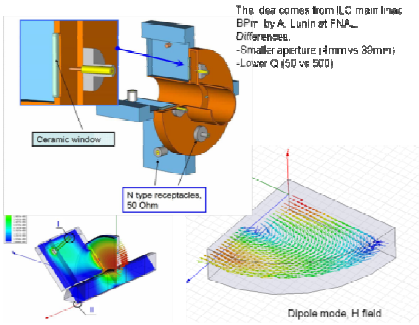

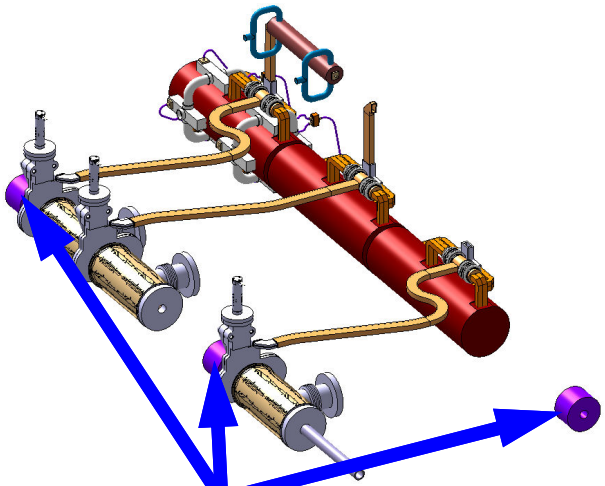

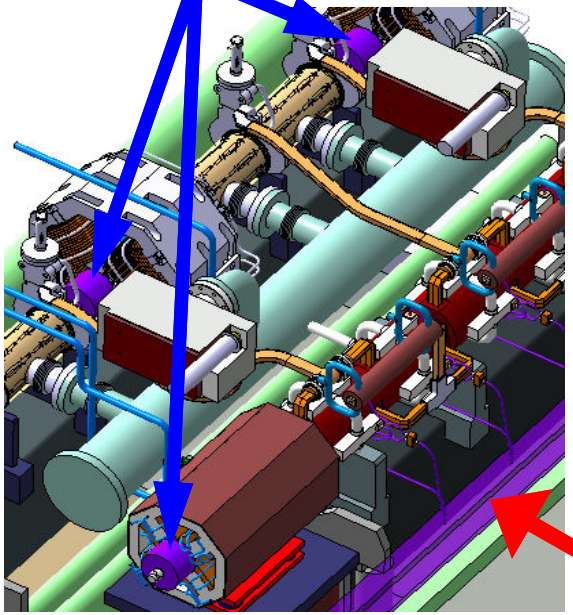

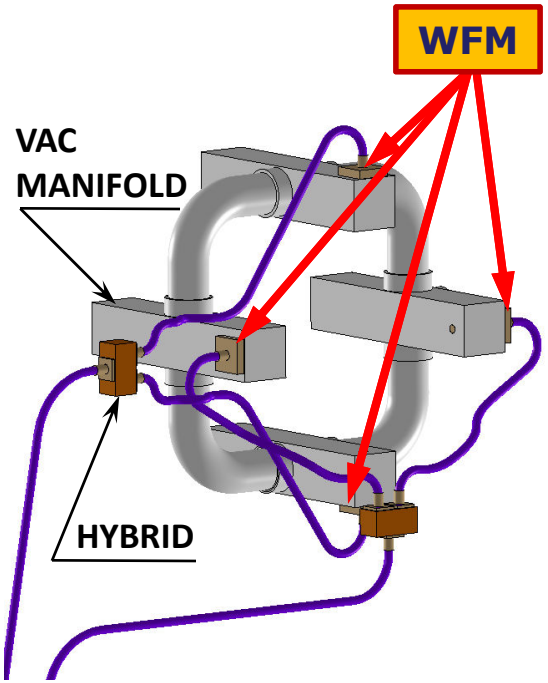

* 50x100 mm space on the side along the module has been reserved for the electronics placement.

Detailed design is needed

Q-BPM interconnection must be studied

*

INSTRUMENTATION INVENTORY

Alexandre.Samochkine @ cern.ch

Alignment

Type	Description	Qty MB	Qty DB	Total Qty	Nº of signals	Qty of cables per item	Qty of cables per module
Sensors	WPS sensor + cable "sensor - remote electronics" + remote electronics. Qty: 1 set per cradle (DB + MB) & 2 sets per MB quad	3	1	4	8	4	4
	Inclinometer sensor + cable "sensor - remote electronics" + remote electronics. Qty: 1 set per cradle (DB + MB) & 2 sets per MB quad	3	1	4	4	4	4
	Temperature probe	1	1	2	2	2	2
	Additionally, depending on the wire length, (every 100m if the wire length is 200m): 3 WPS + 2 inclinometers + 1 HLS (sensors on the metrological plate + cables + remote electronics hidden somewhere)	3 + 2 + 1		6	10	6	N/A
	wire tensioner will, perhaps, be equipped with a strength gauge	1		1	1	1	N/A
Movers	3 movers per cradle (snake system configuration) (DB + MB) + cables linking the movers to their command system	3	3	6	12	6	6
	5 movers + encoders for MB quad + cables linking the movers to their command system	5	N/A	5	10	5	5
Sum					**47**		**21**

22-Jul-2009 AS, CG, GR, HMD, IS, KA, LS EDMS Nº 1009474

Summary on CLIC Module (Type 1) instrumentation cables.

System	Number of signals	Qty of cables per module
Beam instrumentation	25	6
RF components	6	6
Cooling	72	2
Alignment	47	21
Stabilization	20	30
Vacuum	20	2
Sum	**190**	**67**

Number:	1009474	ver.2
EDMS Id:	1009474	
In Work		

PUBLIC

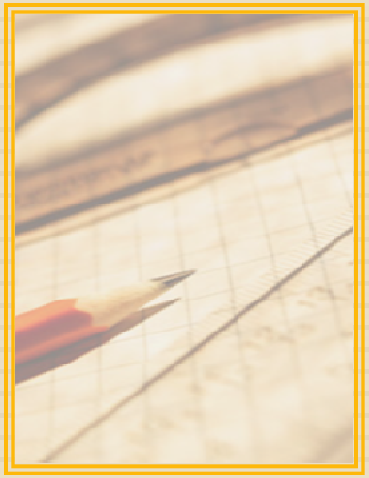

MAGNET SYSTEM

QUADRUPOLES

Alexandre.Samochkine @ cern.ch

Main Beam Quadrupole

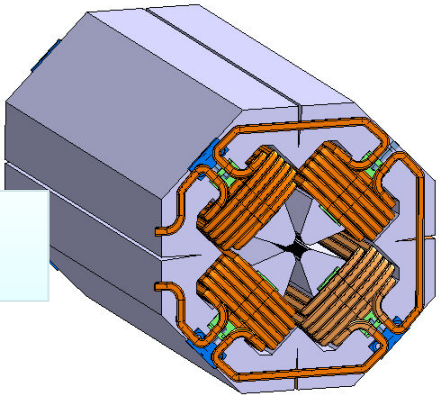

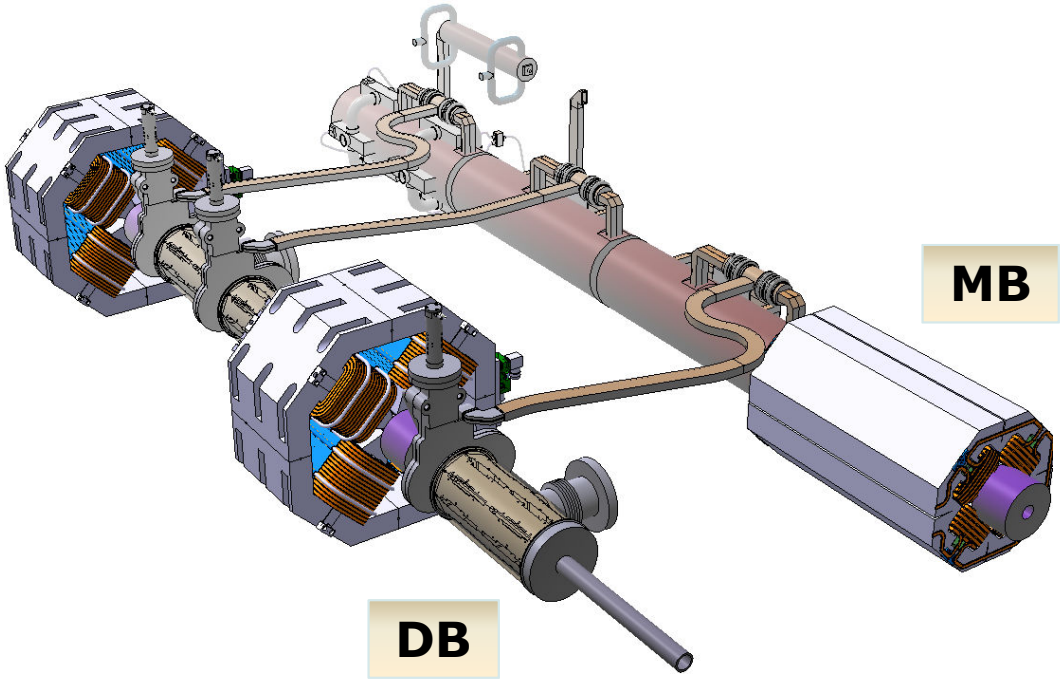

Drive Beam Quadrupole

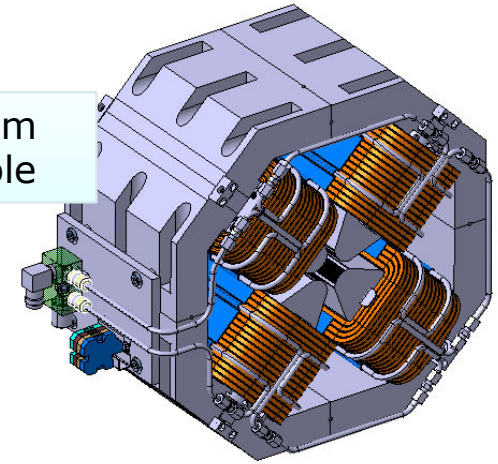

Final 3D models for magnets needed
➔ to be compatible with space allocation

BEAM HEIGHT

How to decrease beam height? Possible optimizations, DB Quad, girders, movers

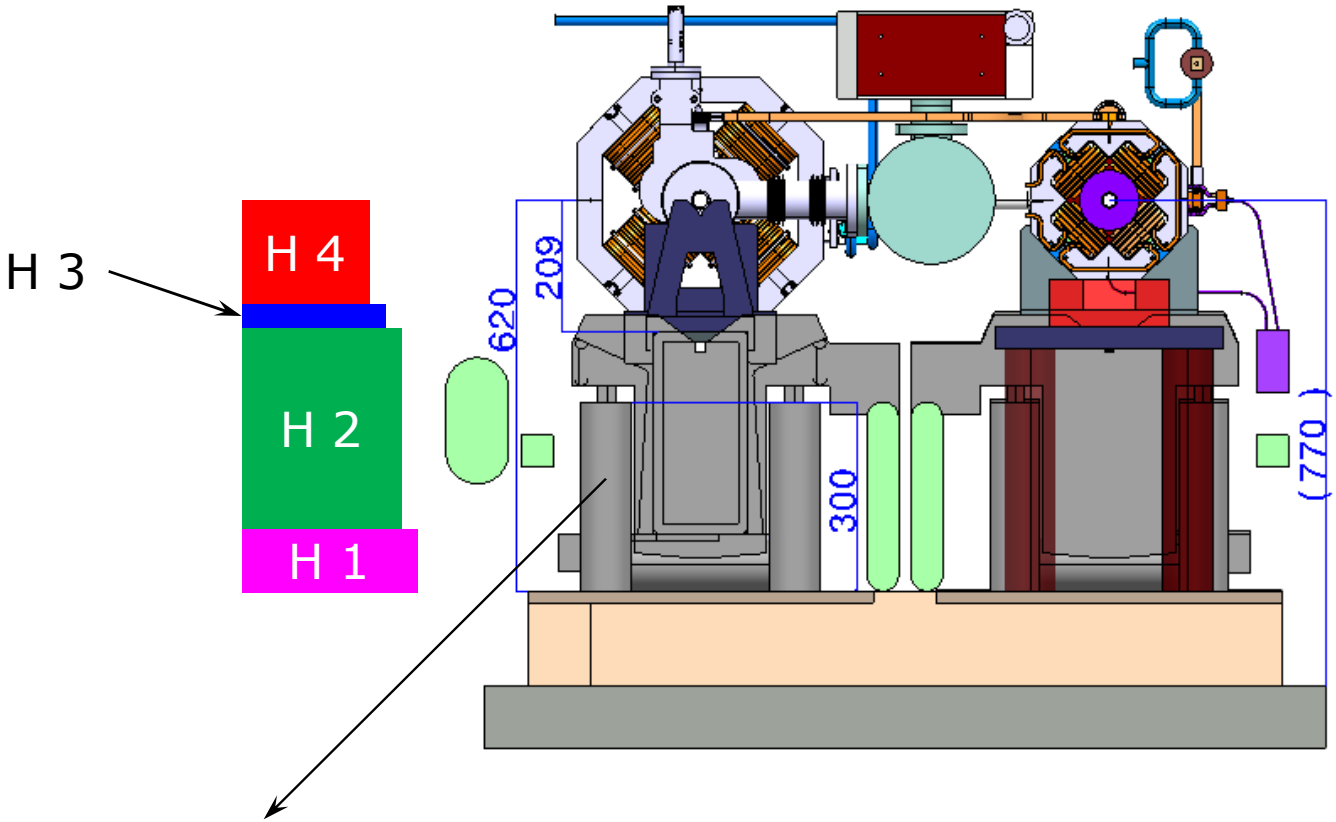

Reduction from
SU team input
(350 mm, D 150)

H 1 – TRANSVERSAL ACTUATOR
H 2 – GIRDER HEIGHT
H 3 – DB QUAD SUPPORT
H 4 – DB QUAD HEIGHT

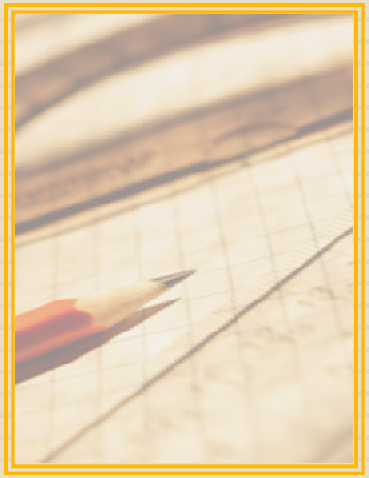

SUPPORTING SYSTEM

Alexandre.Samochkine @ cern.ch

SUPPORTING SYSTEM

BASELINE
MB girders are not of the same length
MB Q support interrupts the MB girder
MB Q beam pipe and AS are connected by bellows

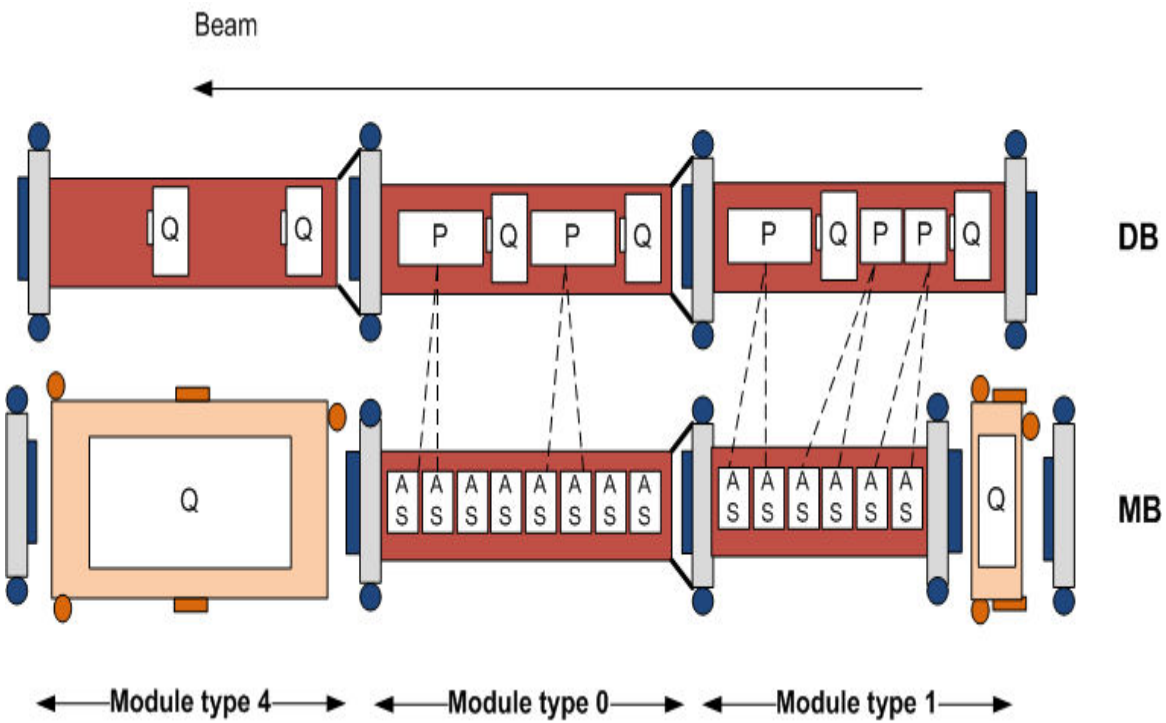

SUPPORTING SYSTEM

Alexandre.Samochkine @ cern.ch

Requirement:
possibility to align MB & DB separately

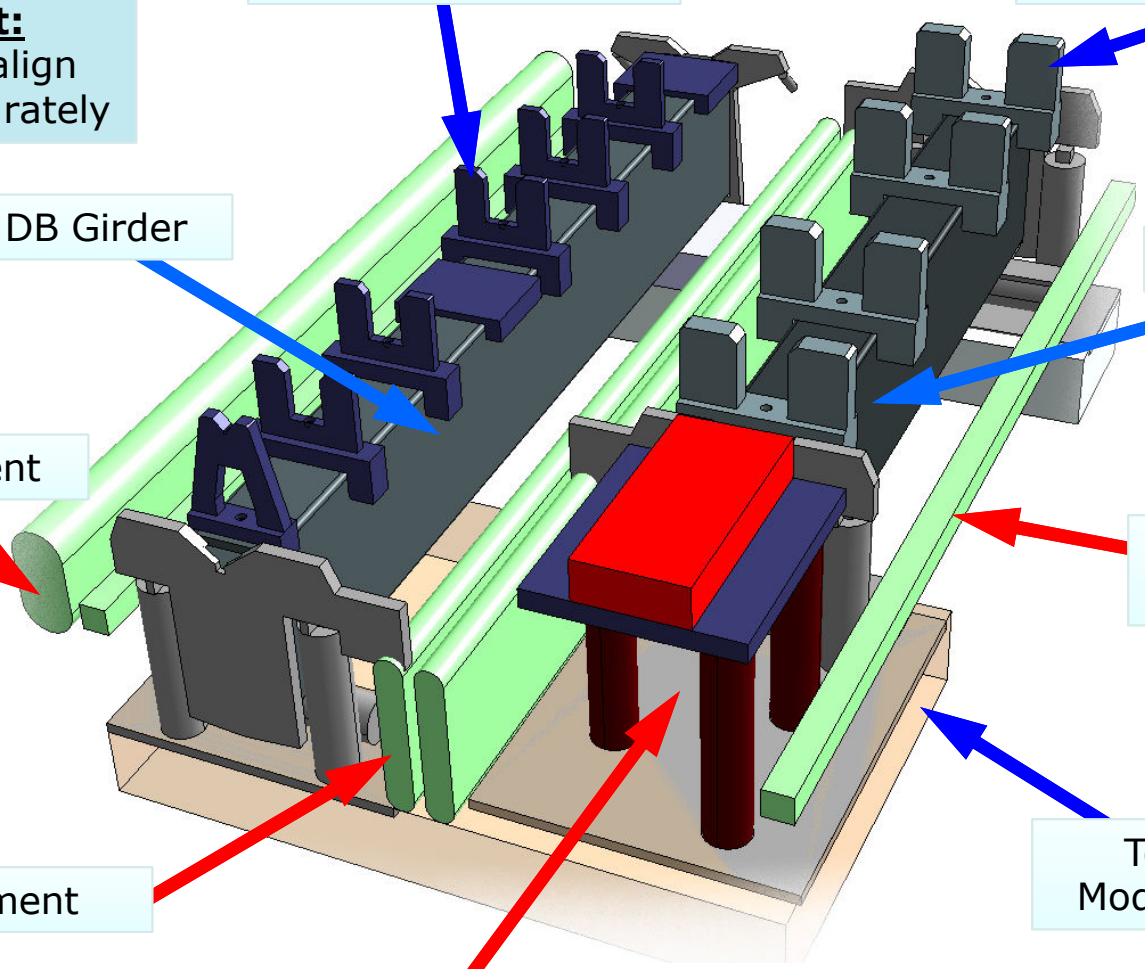

Space is reserved for MB Quad support (including alignment/stabilization/support) and alignment system

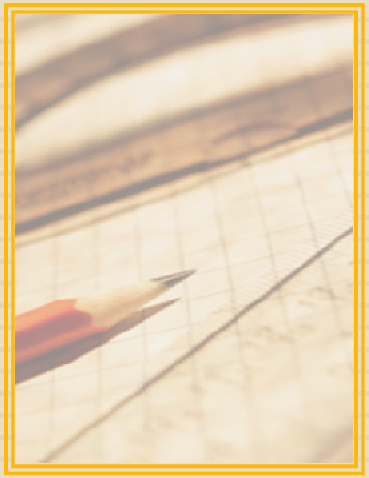

VACUUM SYSTEM

VACUUM LAYOUT

Alexandre.Samochkine @ cern.ch

Consideration on the quantity and overall dimensions of devices needed for creation and maintaining vacuum for the experiment is shown schematically.

10^{-8} mbar BASELINE

Sectoring valves must be integrated

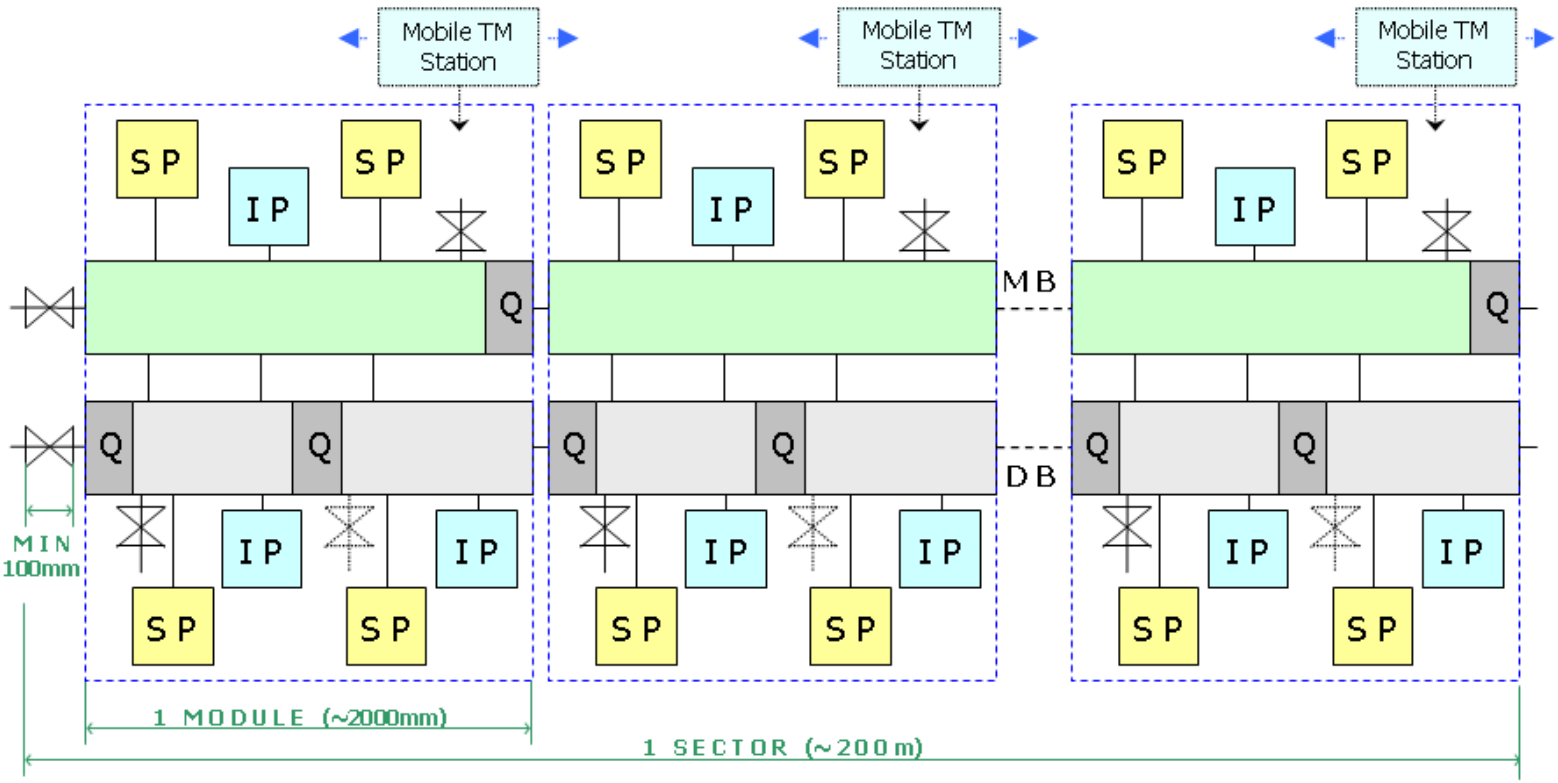

LEGEND	OBJECT	QUANTITY	SIZE (mm)	WEIGHT
Q	Quadrupole			
Mobile TM Station	Mobile Turbo Molecular Station	3-6 stations/sector, 40 in total	500x500x900	
S P	Sublimation Pump	4/module [MB-2, DB-2]		
I P	Ion Pump	3/module [MB-1, DB-1 or 2*]	152x310x240	20 kg
⋈	Manual Valve	3/module [MB-1, DB-1 or 2*]		

** - depends on Quad Vacuum Chamber cross section*

VACUUM

Alexandre.Samochkine @ cern.ch

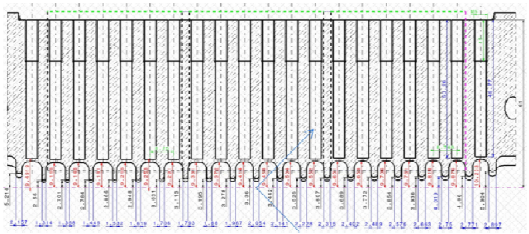

Longitudinal cut of 11.42 GHz AS quadrant

The vacuum simulation based on calculation method with possible 10% error was done by P. Costa-Pinto to estimate the pressure recovery time inside the AS of a standard module after a spark.

The 11.4 GHz AS (CLIAAS110001) was used for simulation. Model consists of 8 copper AS inside a stainless steel tank of 2 m long and Ø 400 mm. Three different pumping speeds (500 l/s, 1000 l/s and 2000 l/s) have been simulated. The amount of gas released per spark is based on the data measured in the spark test system for **Mo**, and considered to occur during 75ns. The simulation was performed for the two main gases observed, **H_2** and **CO**.

The results were 6 ms period of time for recovering 10^{-8} Torr for **H_2** and 20 ms for **CO** after spark.

Calculation of area of AS surfaces exposed to the vacuum

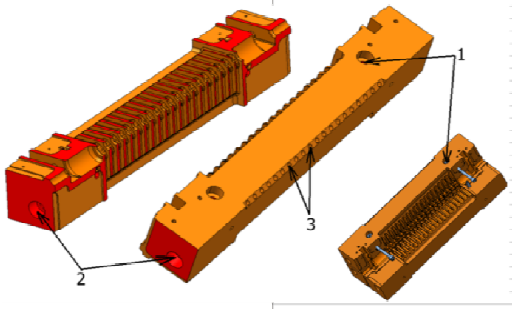

4 Quadrant assembled:			
Area 0.372m2			
Volume 0.002m3			
Volume 1 quadrant AS (Relative Error = 0.000006%)		m^3	4.57E-04
Total area 1 quadrant AS (Relative Error = 0.027907%)	Surfa	m^2	0.09062516
	1	0.00166272	
	2	0.00049018	
	3	0.00022657	
	4	0.00059636	
	5	0.00063774	
	6	0.00048061	
	7	0.00063774	
	8	0.00068154	
	9	0.00022357	
	10	0.00766036	
sum		0.01339729	
	11	0.00006663	x2
	12	0.0000657	x2
	13	0.00006387	x2
	14	0.00006202	x2
	15	0.00006015	x2
	16	0.00005827	x2
	17	0.00005637	x2
	18	0.00005446	x2
	19	0.00005253	x2
	20	0.00005058	x2
	21	0.00004862	x2
	22	0.00004664	x2
	23	0.00004465	x2
	24	0.00004264	x2
	25	0.00004061	x2
	26	0.00003857	x2
	27	0.00003651	x2
	28	0.00003444	x2
	29	0.00003338	x2
	30	0.00047124	x2
	31	0.0001131	x2
sum		0.00308196	
	32	0.00141792	0.01789816
AS (1 quadrant total area /contact surfaces excluded/)			0.07292801
AS surf. area in contact with vacuum		**m^2**	**0.29171204**

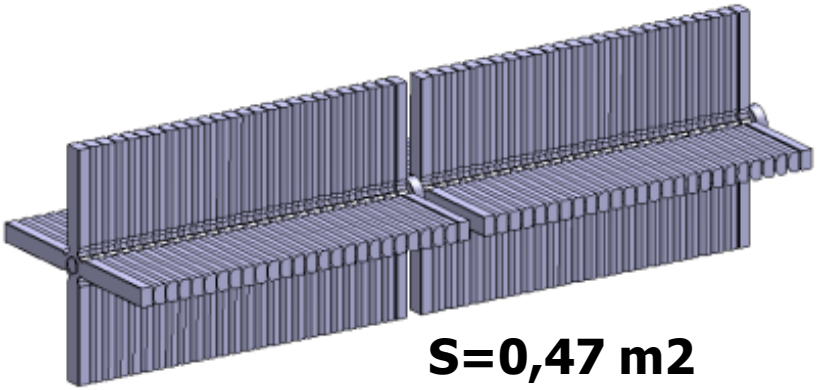

S=0,47 m2

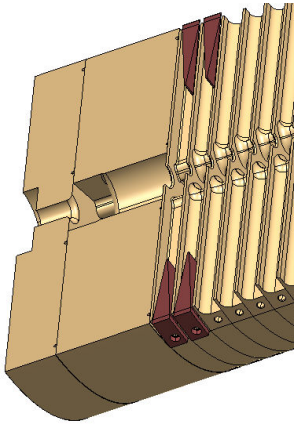

Rough calculation of AS surface for pumping is done. The more precise (with the loads surface) must be finished as soon as the AS design done.

VACUUM MANIFOLDS

Alexandre.Samochkine @ cern.ch

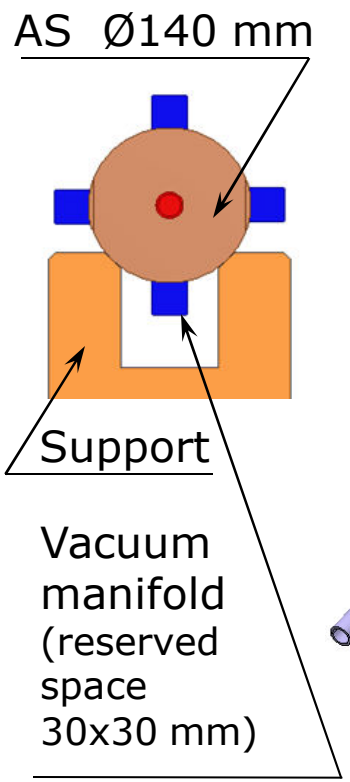

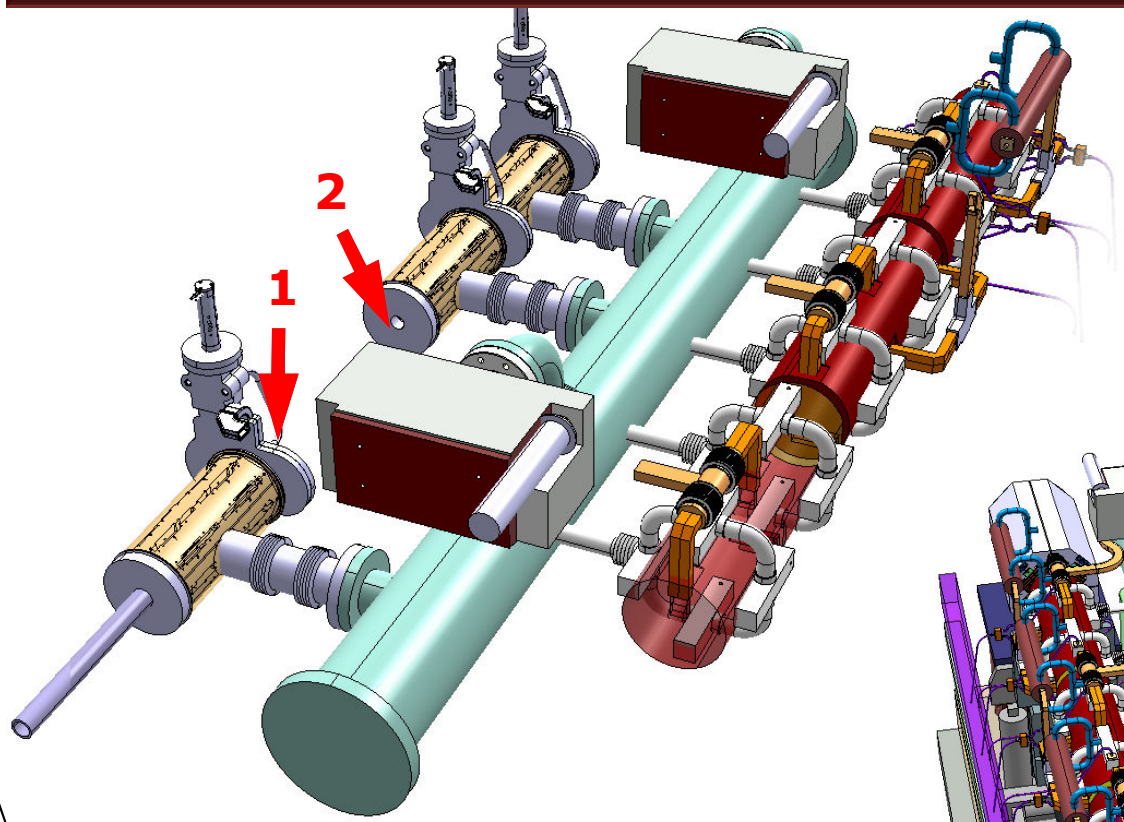

1 PETS–BPM, 2 QUAD-PETS

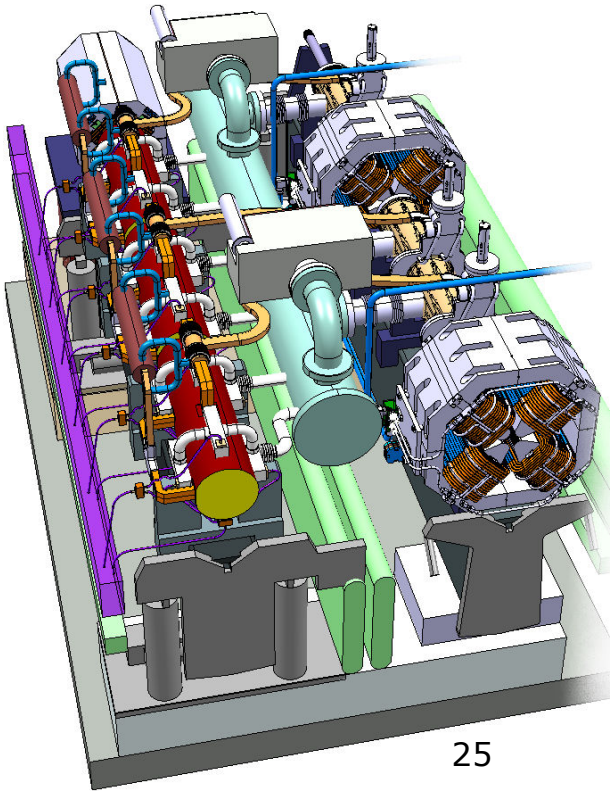

Interconnections under design – still to be integrated

Vacuum system is under optimization

Vacuum components supporting, decoupling from AS & PETS are our current challenging tasks.

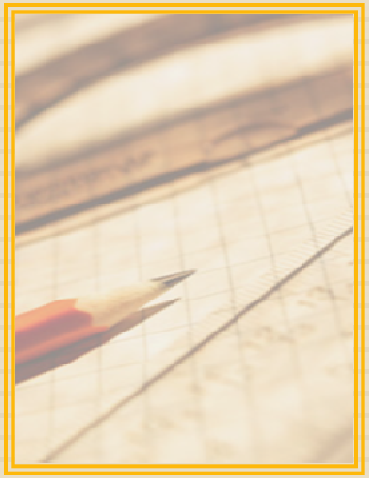

ALIGNMENT & STABILIZATION SYSTEM

ALIGNMENT & STABILIZATION

Alexandre.Samochkine @ cern.ch

A proposal for MB quad fine alignment and stabilization has been suggested previously. The problem is under study. Space was reserved accordingly.

Yesterday input to be integrated

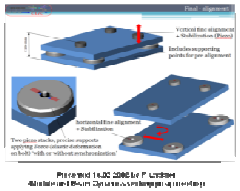

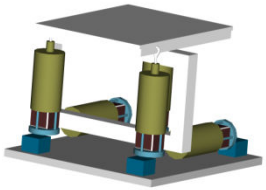

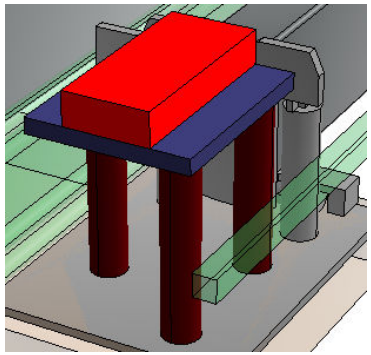

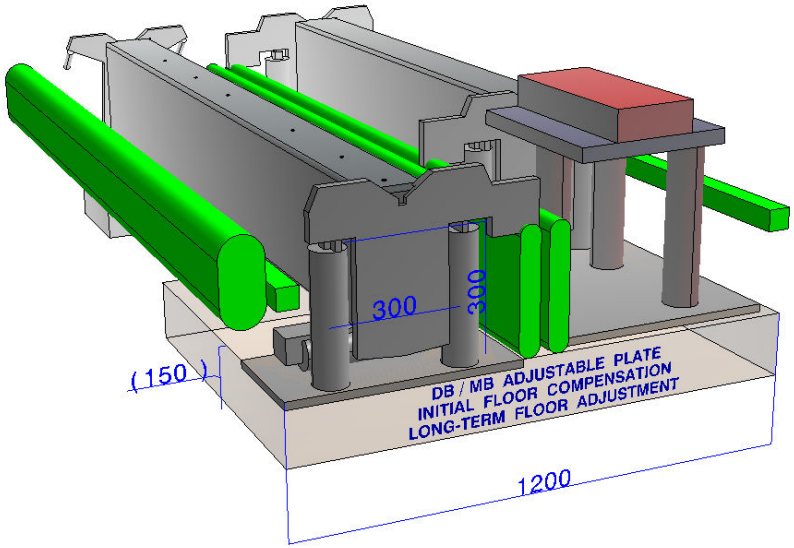

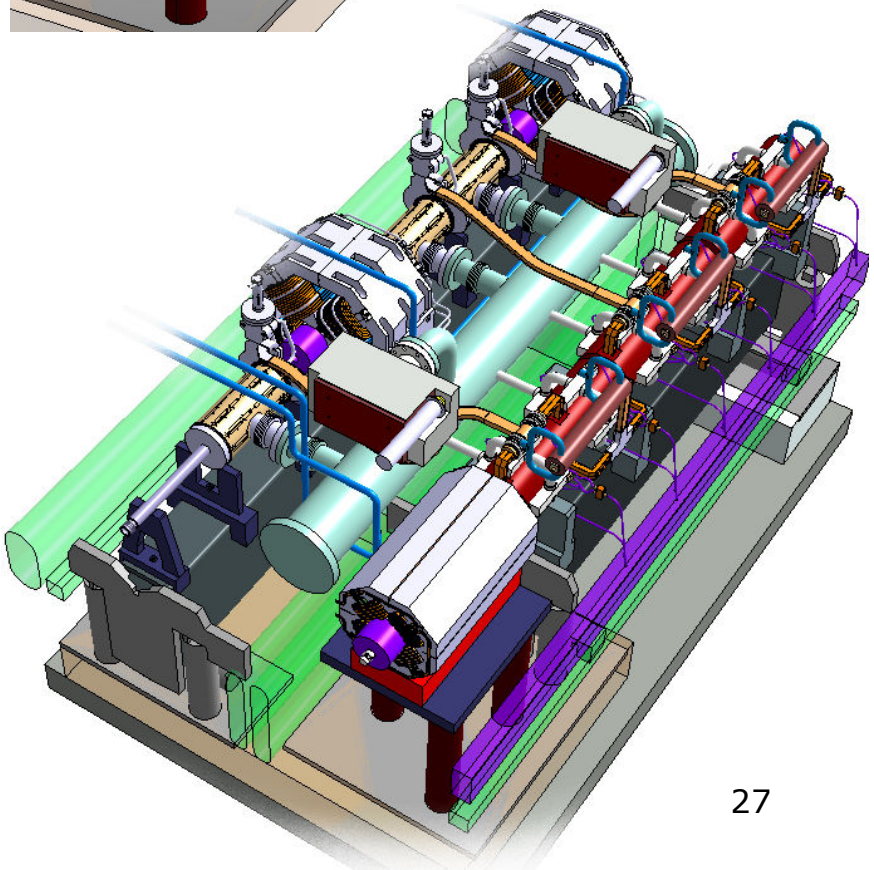

Space reservation for alignment equipment

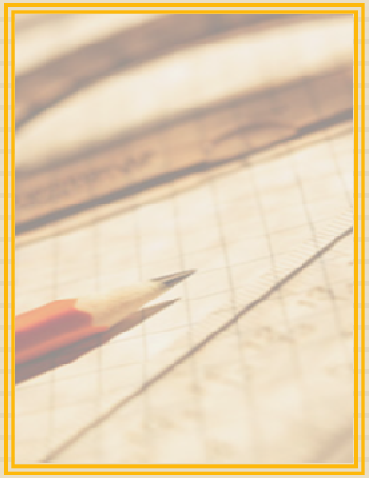

COOLING SYSTEM

MODULE COOLING LAYOUT

Alexandre.Samochkine @ cern.ch

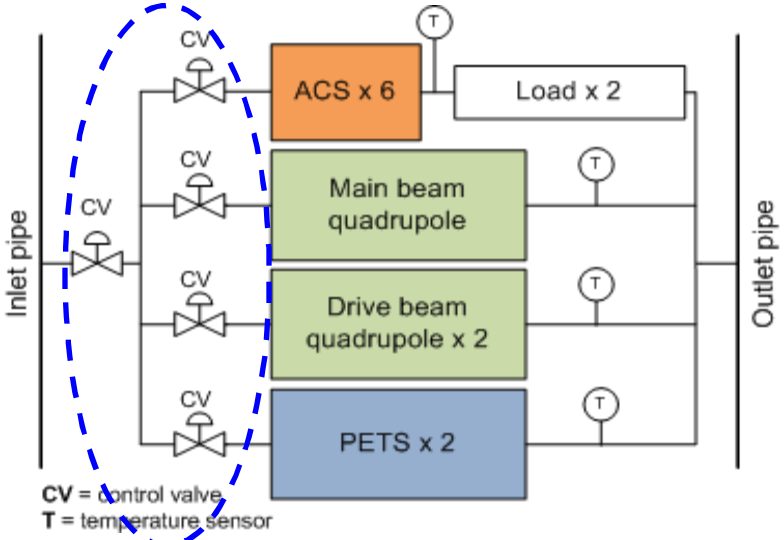

Valves still have to be integrated

- **MB** - AS in series and loads in series, Quad – in parallel
- **DB** - PETS in series, Quads in series

The water circuits have a common inlet and outlet. Loads dimensions were adapted to the module and do not exceed 300mm in length and Ø 50mm.

An example of cooling circuits routing

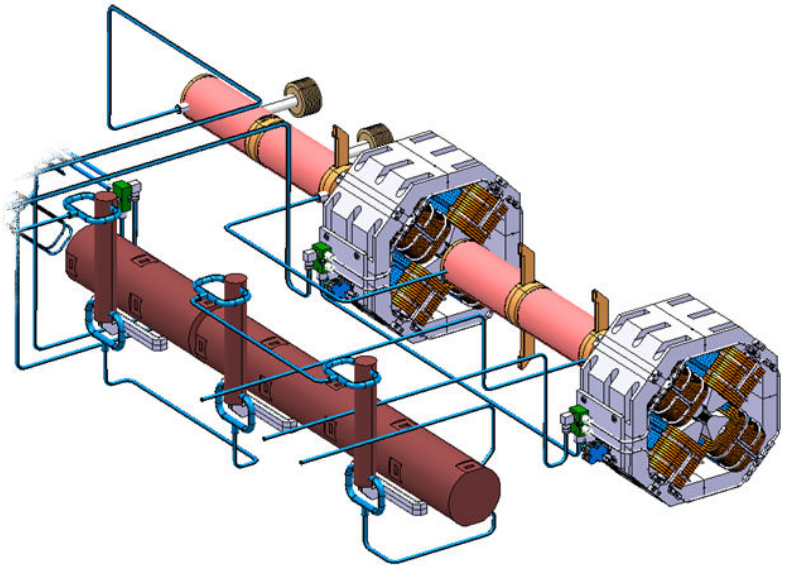

PETS COOLING

Alexandre.Samochkine @ cern.ch

Baseline:
- cooling circuits external to PETS
- cooling of PETS in series

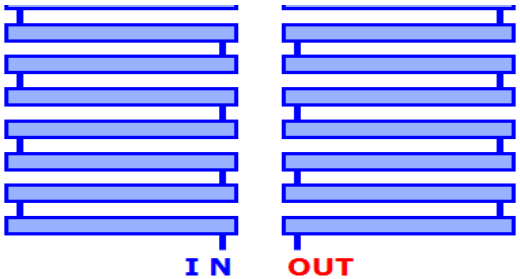

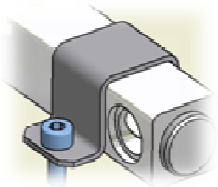

Forced convection cooling – circuits inside the vacuum tank, outside the octants

OLD

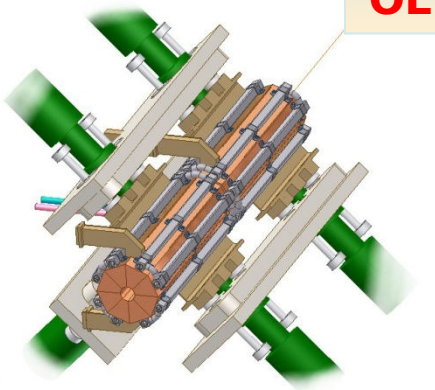

NEW

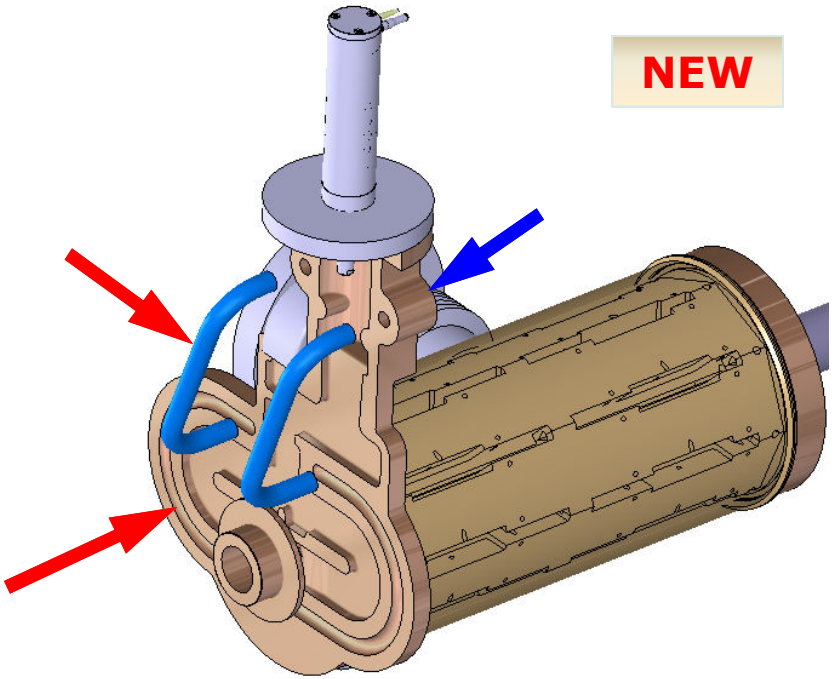

New cooling configuration

Cooling channel and tubes integrated into compact coupler

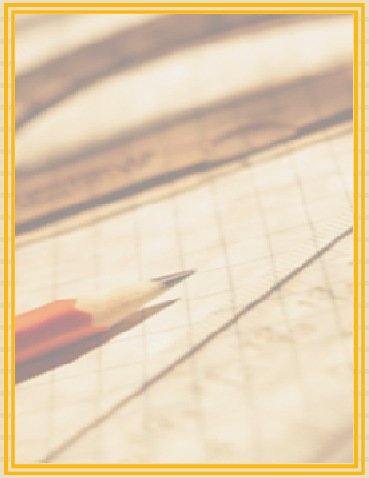

ASSEMBLY, TRANSPORT, INSTALLATION

MODULE TRANSPORT & INSTALLATION

- The module assembly will be done on the surface (as much as possible). Each module has the cradles only on one end => the temporary support is needed. Strategy for Q modules to be agreed with SWG.
- An agreed strategy (with CES WG) is based on overhead lifting with spread beam.
- The vertical interconnection plane between adjacent modules is taken into consideration.
- Two beams must be rigidly bound in order to maintain the alignment during transport (our concern – dedicated test in girder mock-up). It would be nice to be able to transport interconnected modules.

The required space has been reserved for the alignment system. And we have to cross these zones during installation.

The lifting points still must be defined.

- The transport solution needs to be in compliance with systems' components.
- The test area must be compatible with transport and installation tests requirements.
- The transport and installation issues must be studied at the current design phase.

CLIC MODULE TYPE 1

Alexandre.Samochkine @ cern.ch

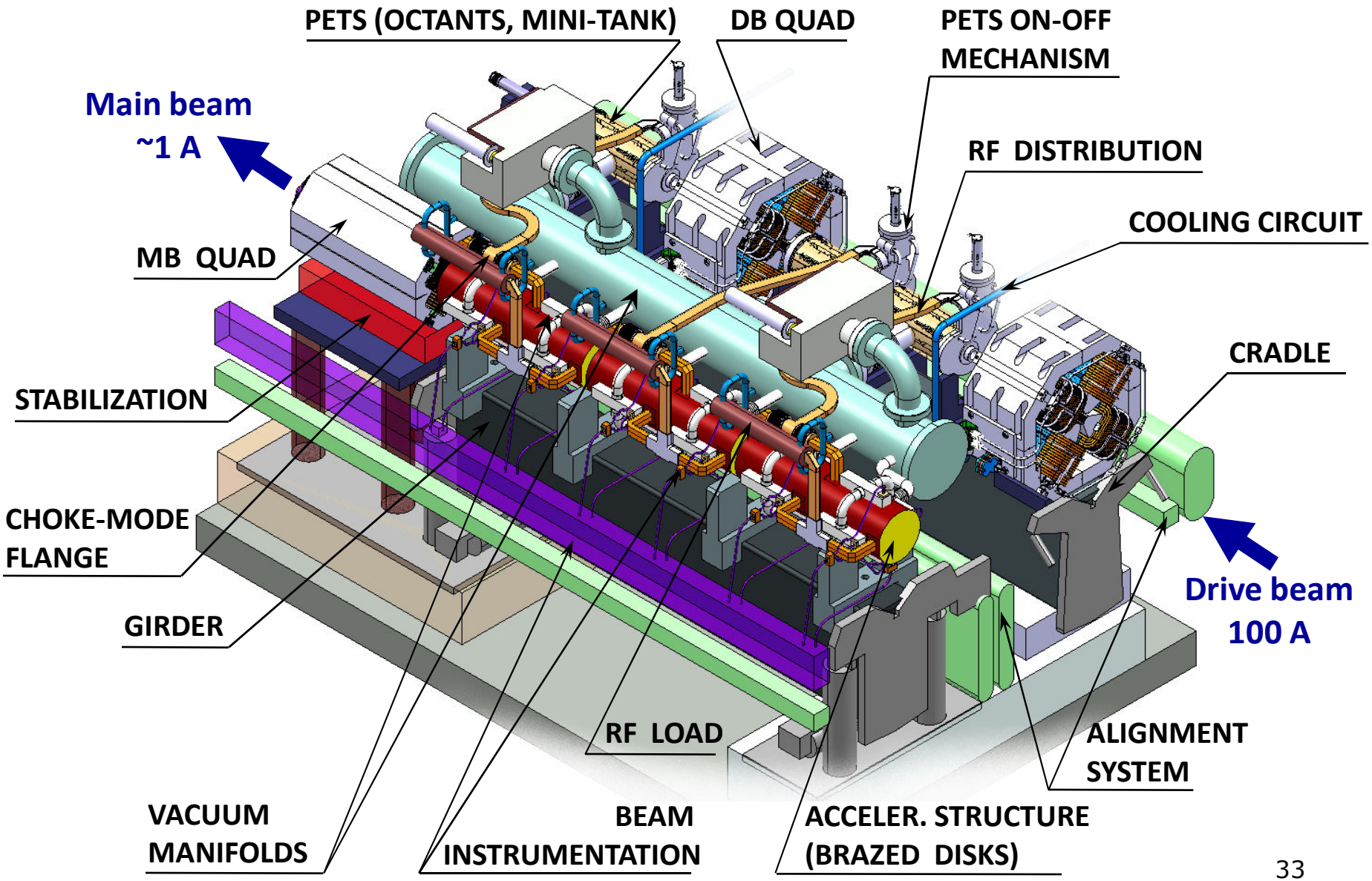

Alexandre.Samochkine @ cern.ch

CLIC MODULES TYPE 0 & T4

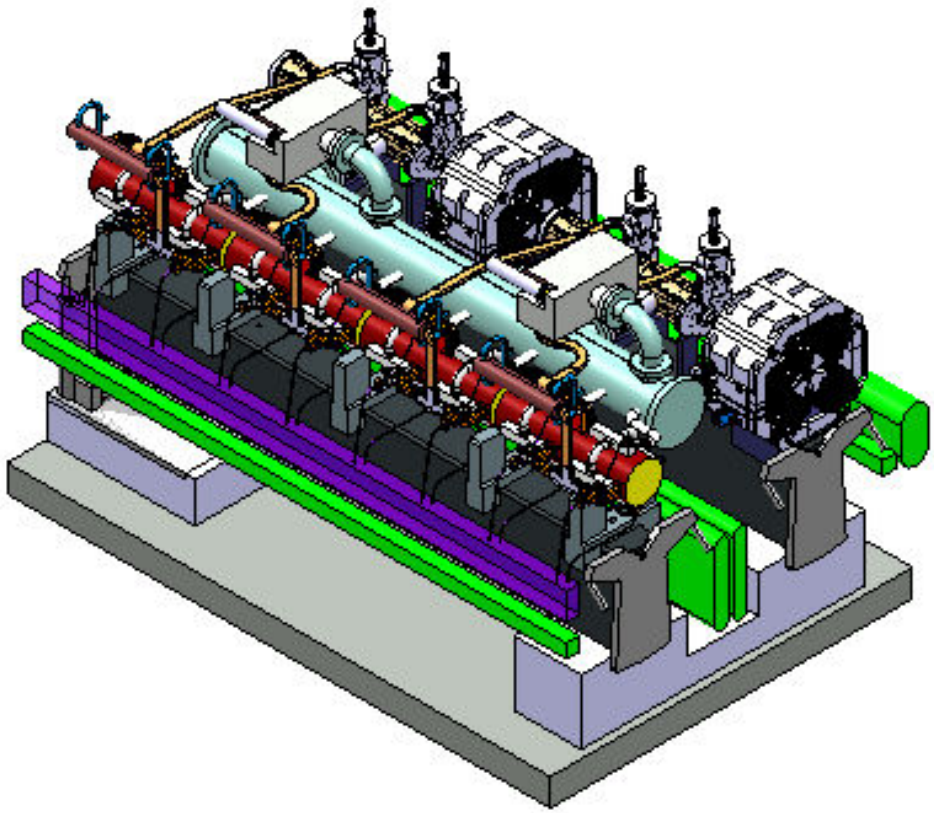

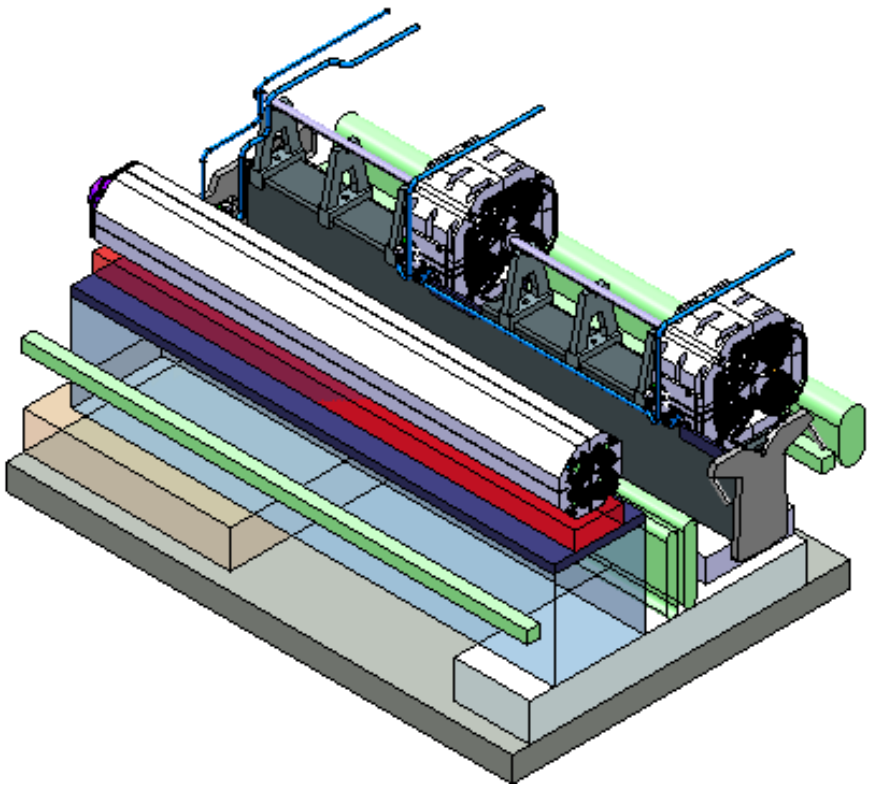

Alexandre.Samochkine @ cern.ch

CONCLUSIONS

- Integration of different systems in terms of space reservation has been finished.
- Detailed design started for the main systems.

PETS concept is well advanced including the On-Off mechanism.

AS layout is under way. Integration conditions are specified. The system is very complex for design and integration. This is due to necessity to have many systems attached to AS.

RF network is well advanced.

Magnets dimensions should be confirmed.

The detailed design for supporting system is needed for better understanding of integration issues.

This is valid for the alignment and stabilization systems' components as well.

The vacuum parts are defined but the neighboring components give some restrictions. The optimization will be continued.

The instrumentation components design would require more attention.

Transport features to be implemented.

GRATITUDE

I am very much obliged to each system responsible for their contribution and cooperation!

THANK YOU !

Alexandre.Samochkine @ cern.ch

AS (ALTERNATIVE)

Depending on manufacturing strategy the AS could be produced of four quadrants, later assembled together.

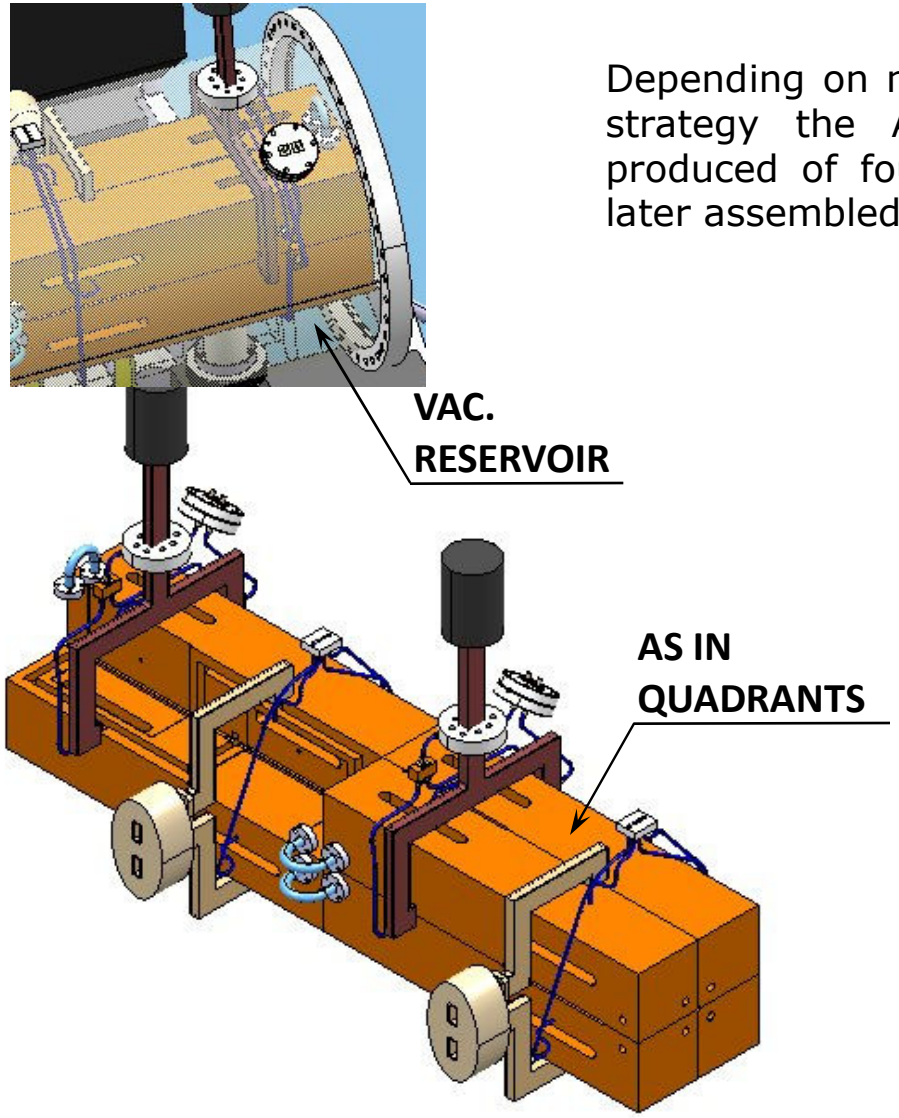

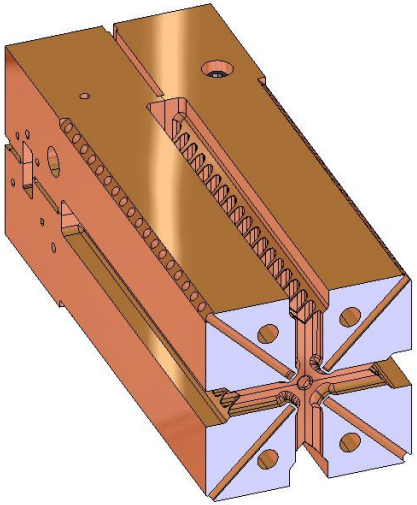

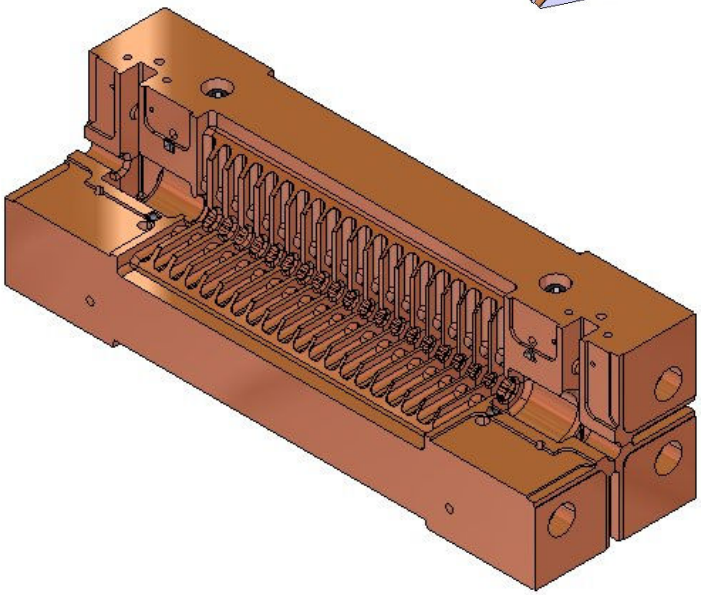

TEST MODULES INTEGRATION STUDY.