Karlsruhe Institute of Technology

Multiplexed readout of microwave SQUID microcalorimeters

KIT: Oliver Sander, Nick Karcher, Oliver Krömer, Matthias Balzer, Marc Weber
KIP, Uni HD: Sebastian Kempf, Mathias Wegner, Andreas Fleischmann, Christian Enss

Institut für Prozessdatenverarbeitung und Elektronik

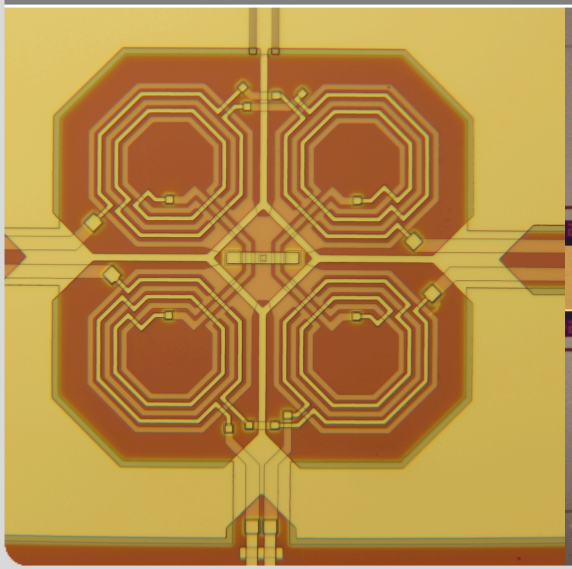

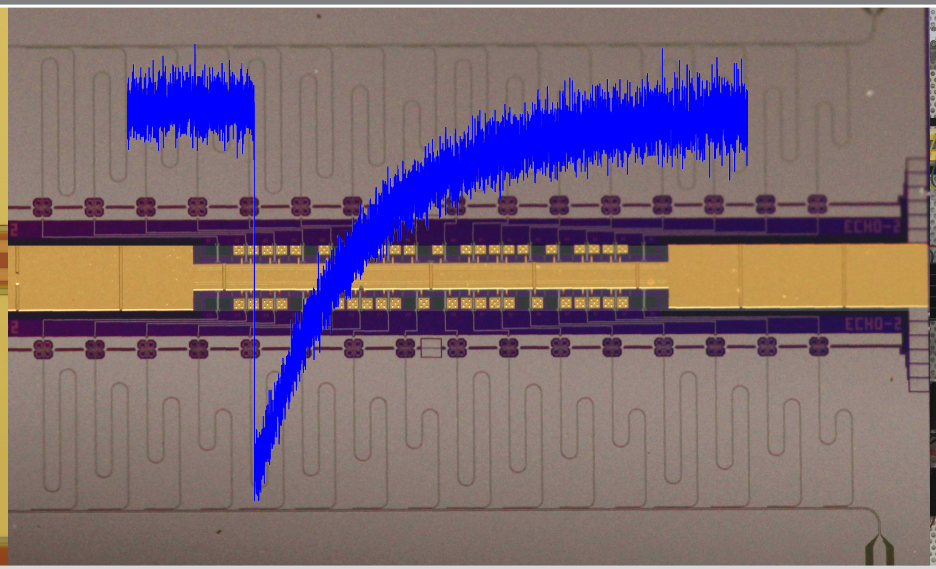

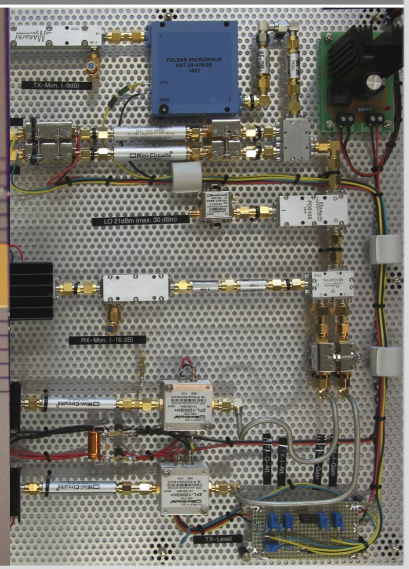

Metallic Magnetic Calorimeters (MMCs)

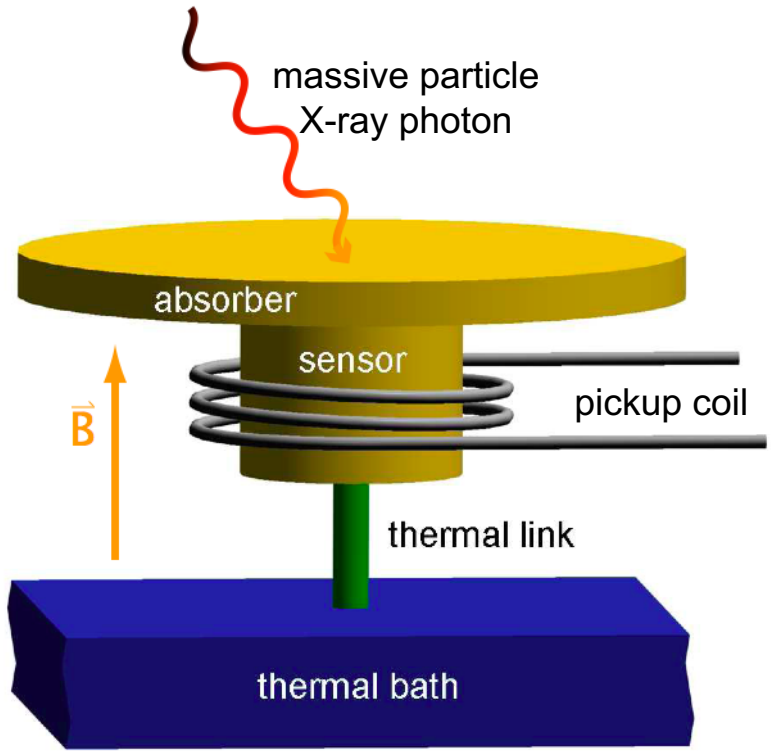

single detector event

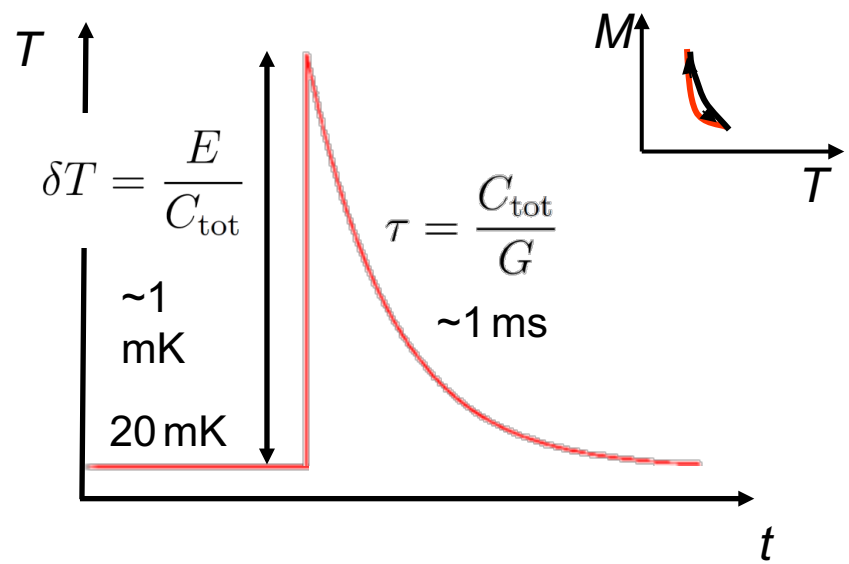

main differences to resistive thermometers:

- no power dissipation in the sensor
- no galvanic contact to readout circuit

Key features of metallic magnetic calorimeters

Fast signal rise time

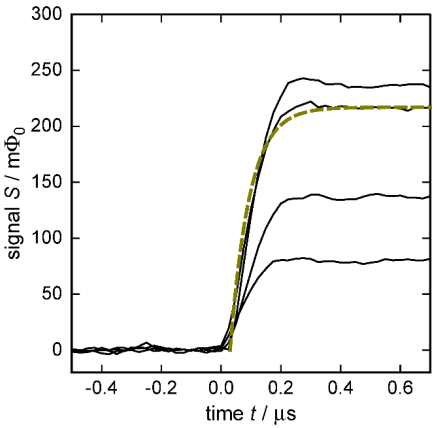

High energy resolution

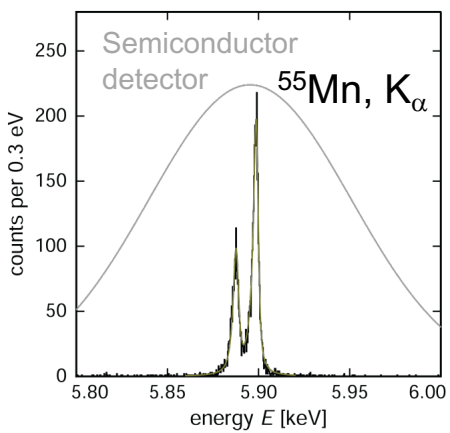

Excellent linearity

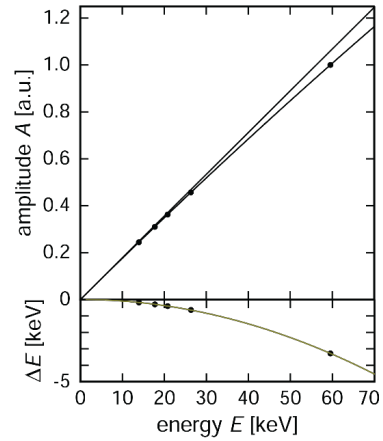

Large energy bandwidth

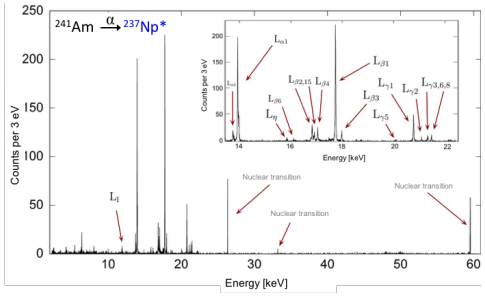

τ_0 < 100 ns

ΔE_{FWHM} = 1.6 eV @ 6 keV

5.9 % @ 60 keV

eV to 100 keV

↓

↓

readout requirements

↓

↓

Large bandwidth (~MHz)

Very low readout noise

Linear readout

Large dynamic range

Applications of metallic magnetic calorimeters

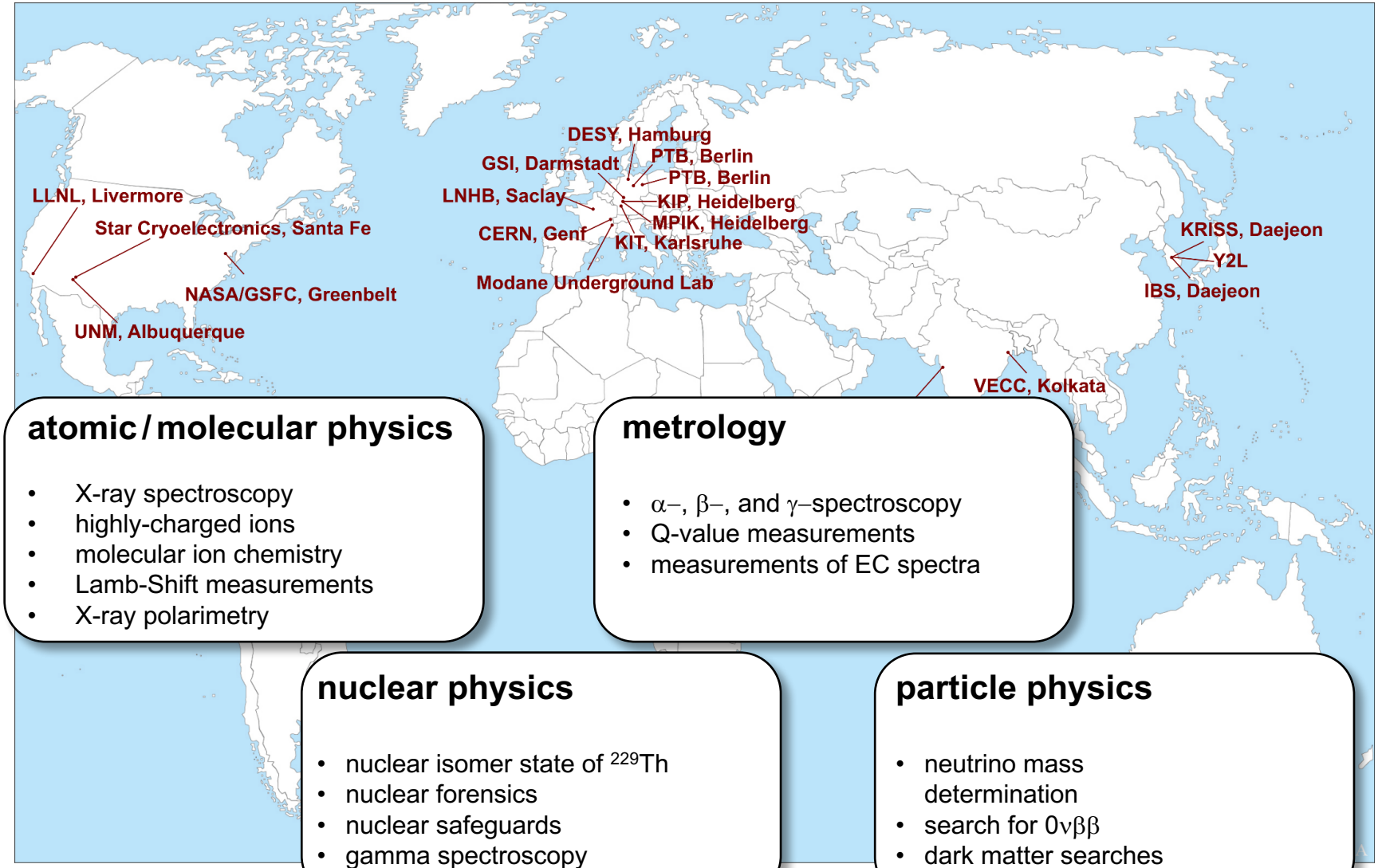

atomic / molecular physics

- X-ray spectroscopy
- highly-charged ions
- molecular ion chemistry
- Lamb-Shift measurements
- X-ray polarimetry

metrology

- α–, β–, and γ–spectroscopy
- Q-value measurements
- measurements of EC spectra

nuclear physics

- nuclear isomer state of ^{229}Th
- nuclear forensics
- nuclear safeguards
- gamma spectroscopy

particle physics

- neutrino mass determination
- search for $0\nu\beta\beta$
- dark matter searches

Readout of MMC Detector Arrays

The **E**lectron **C**apture ^{163}**Ho**lmium experiment **ECHo** will measure the electron neutrino mass by analyzing the energy spectrum in the electron capture process of ^{163}Ho.

ECHo-1k: ~50 detectors → ECHo-1M: ~50.000 detectors → ...

How to read out a large number of detectors?

Single-channel readout:
10 wires, 2 SQUIDs,1 electronics

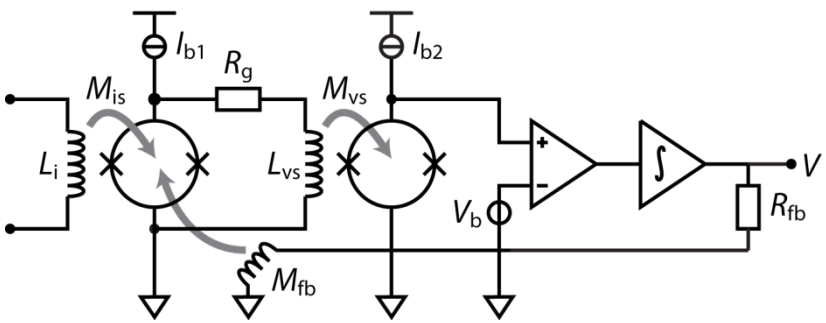

Multiplexed readout:
Frequency Division Multiplexing allows 100s detectors per readout channel

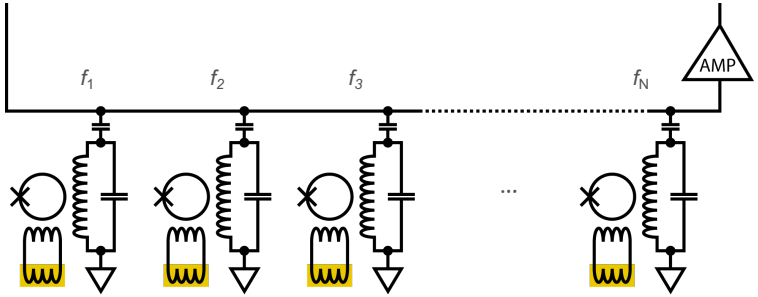

- number of wires
- parasitic heat load
- costs
- complexity

$\sim N$ → scalability

Principle of microwave SQUID multiplexing

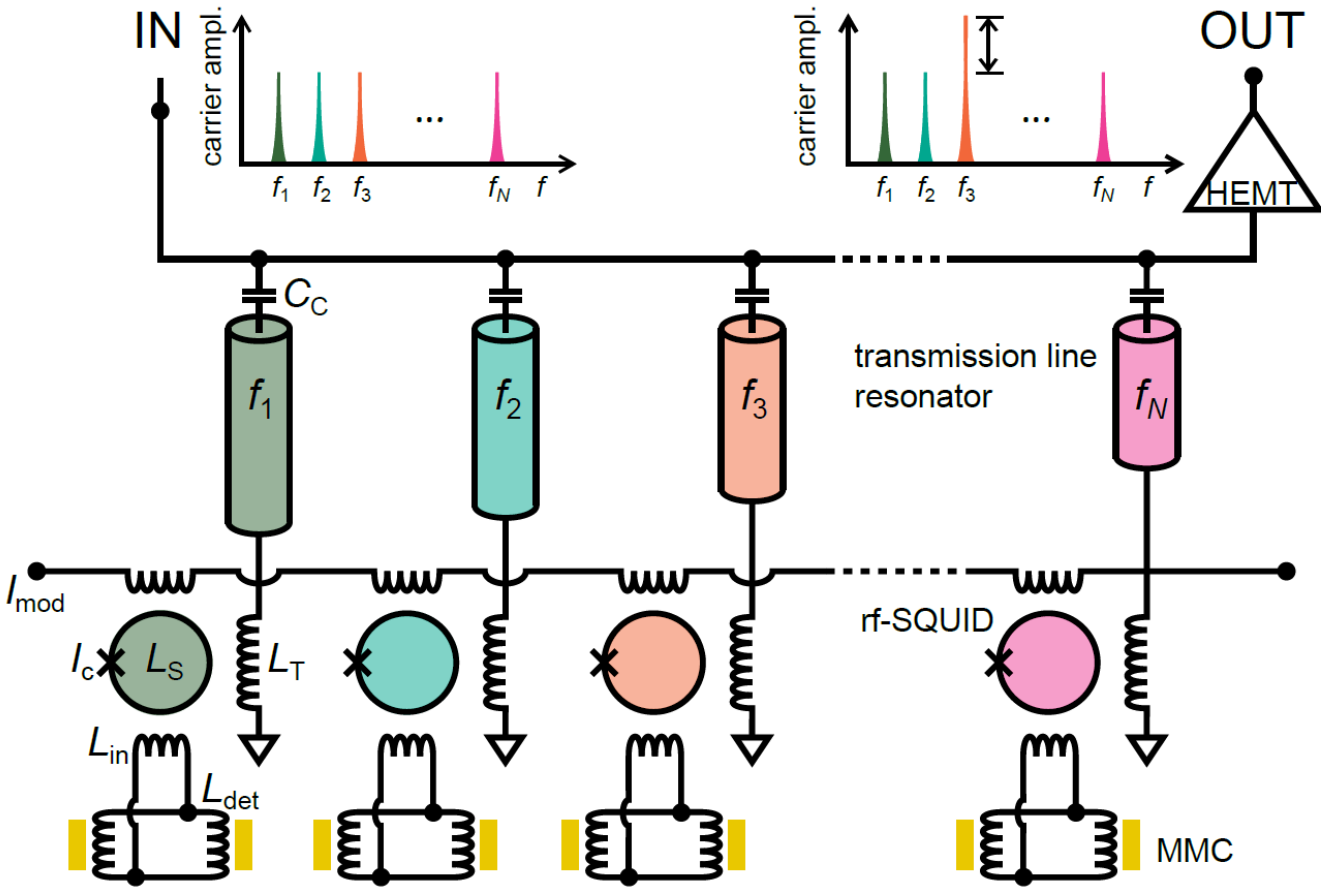

array readout using only one HEMT amplifier and two coaxes

[4] K. Irwin and K. Lehnert, Appl. Phys. Lett. 85 (2004), 2107-9
[5] J. A. B. Mates et al., Appl. Phys. Lett. 92 (2008), 023514

Frequency domain multiplexing I

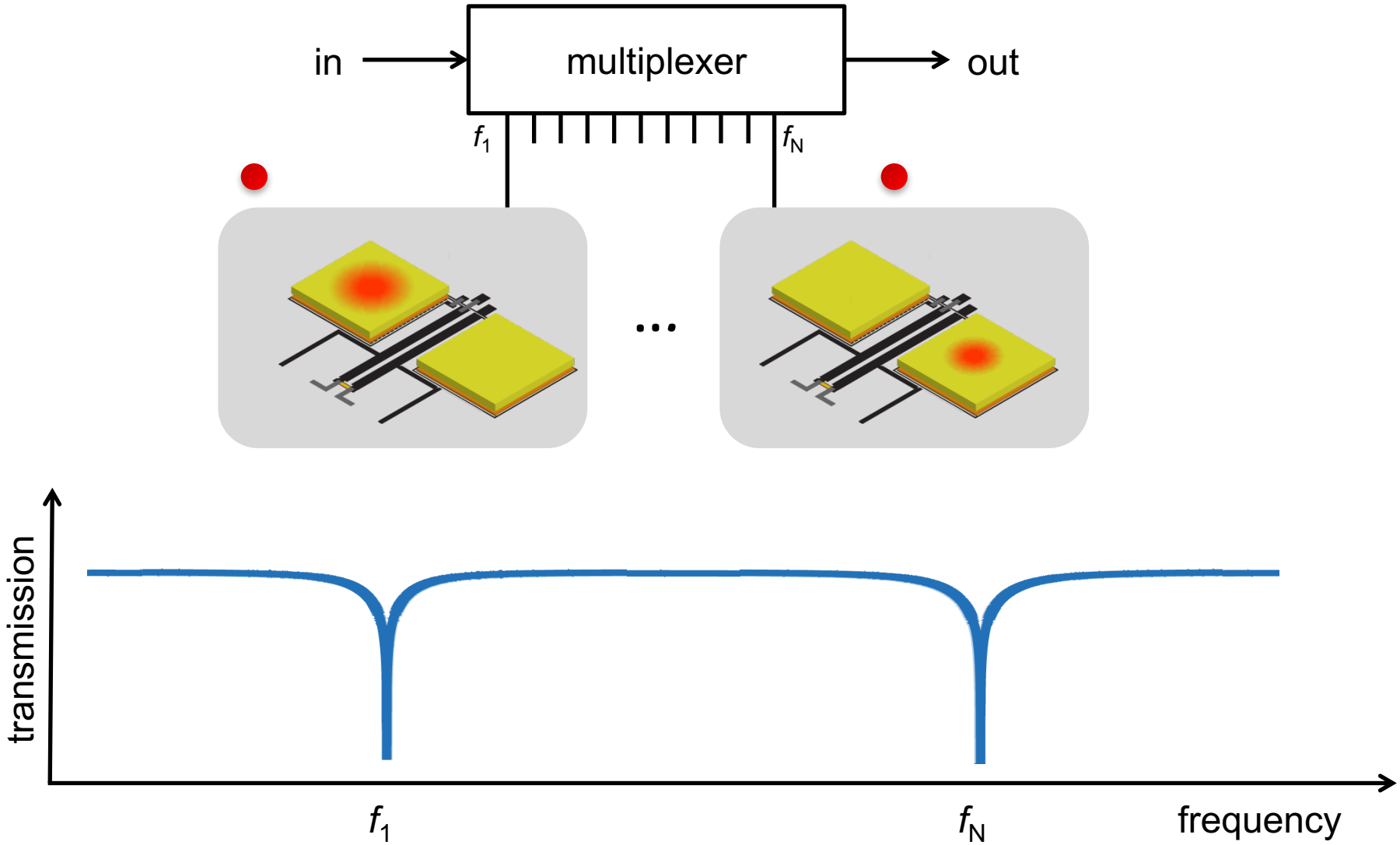

Frequency domain multiplexing II

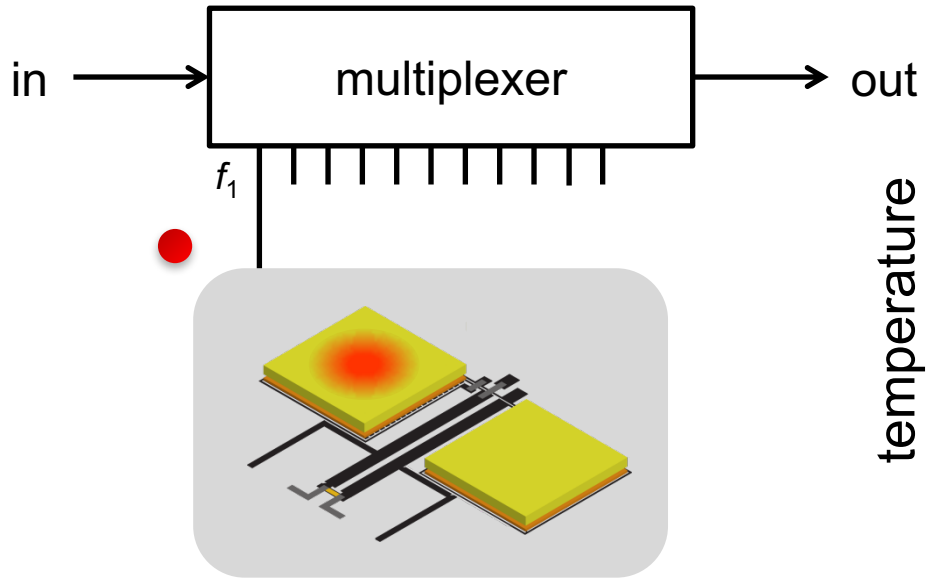

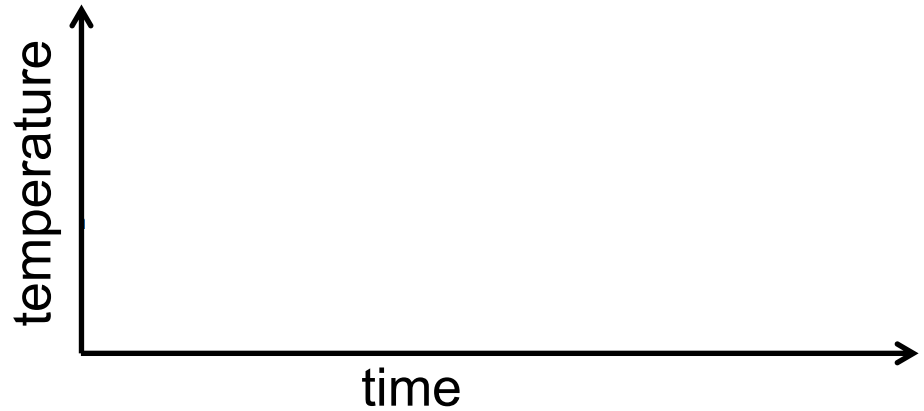

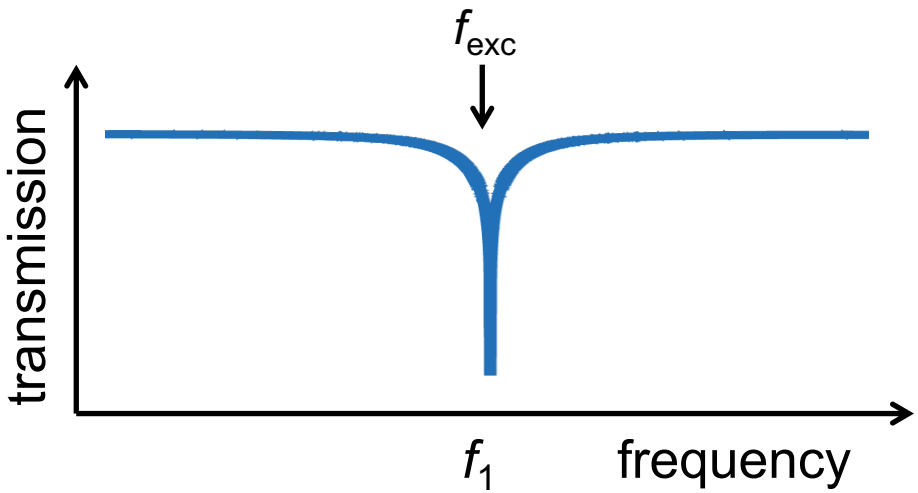

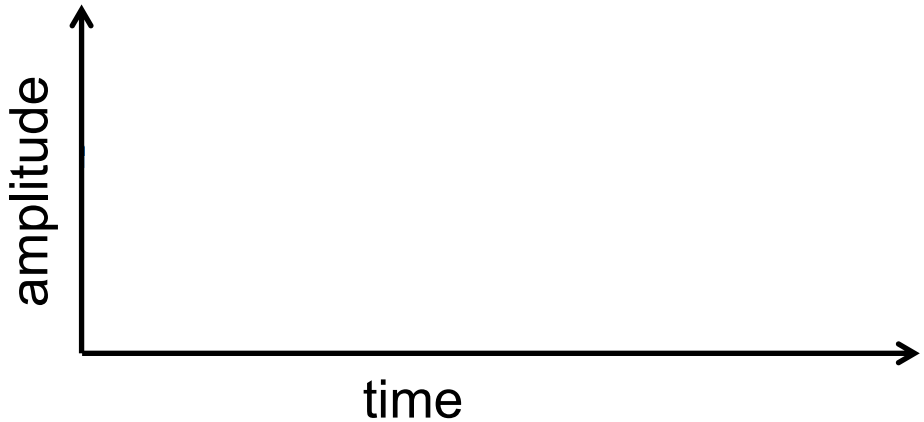

Detector array with on-chip multiplexer

- 64 detector pixels with expected τ_0 < 1 µs and ΔE_{FWHM} < 5 eV
- 14 microfabricated layers: heights from nm to µm, widths from µm to cm

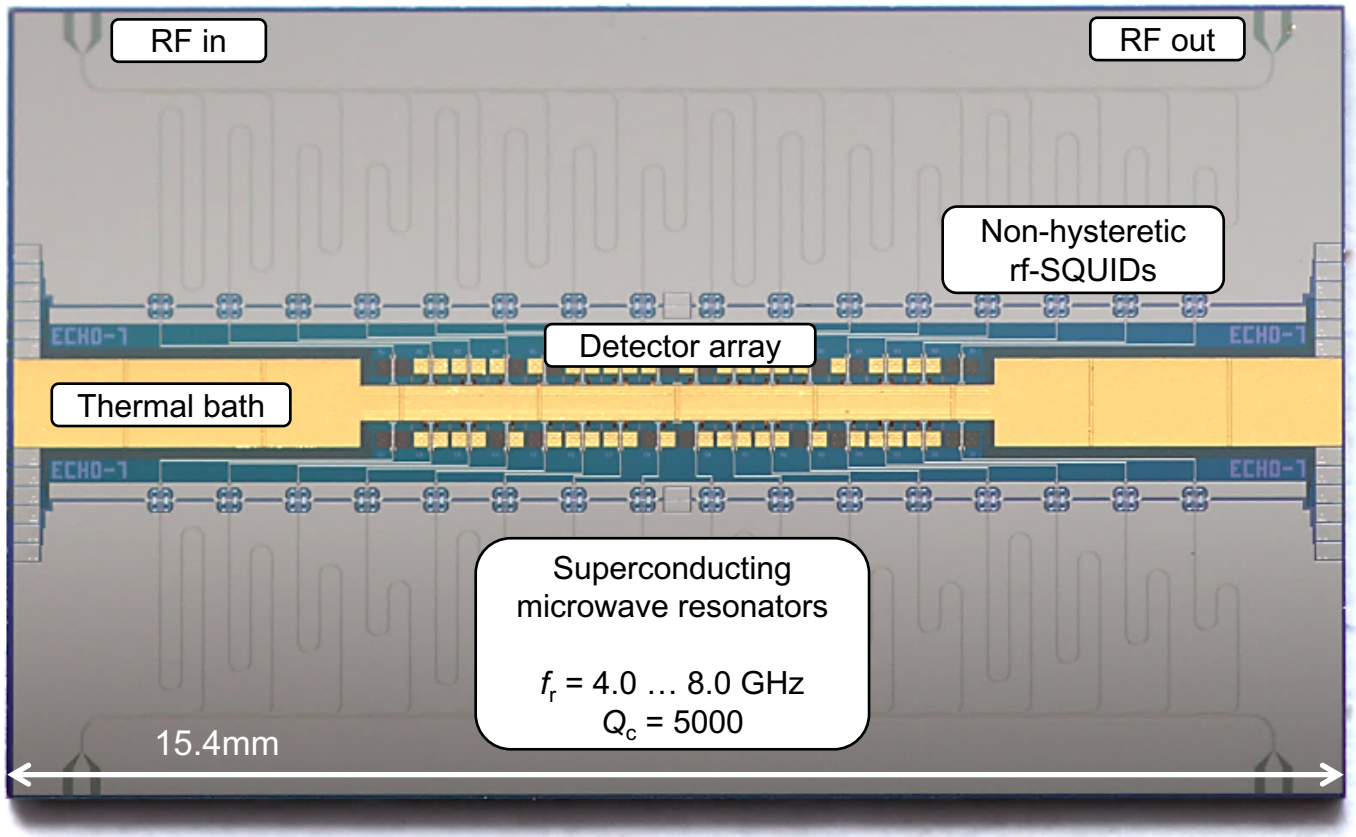

Fabricated @ KIP

Software-defined radio architecture

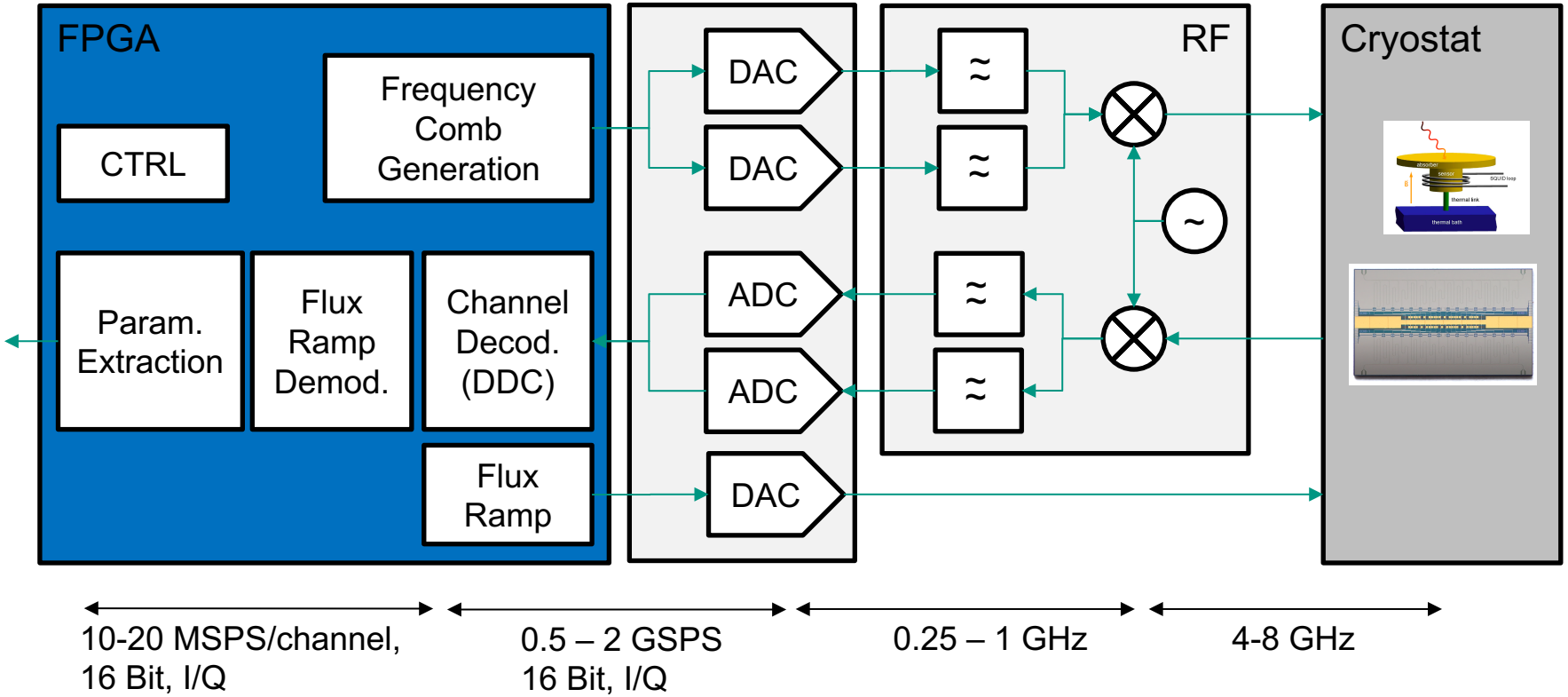

Readout system for 6k MMC channels

- primary target: ECHo-100k experiment

- 4 GHz bandwidth (4-8 GHz)
- 10 MHz channel spacing
- 400 channels per board
- ATCA, MTCA.4 or 19” server rack
- custom PCBs

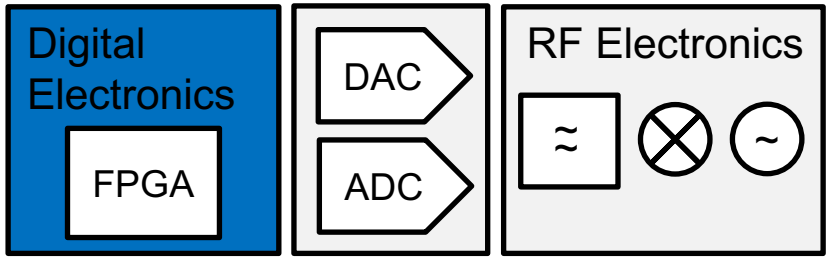

19“ COTS housing

Digital electronics

- Xilinx Zynq Ultrascale+
- 2nd FPGA if 400 channel processing does not fit into one single FPGA
- slow control on processors
  - Linux based, running on integrated cores
  - system configuration (ADC/DAC/LO/FPGA/...)
  - auto calibration (finding resonances, calibrate mixer errors, ..)
  - runtime control and diagnostics
- dataflow in reconfigurable logic
  channelization → flux ramp demodulation →
  → param. extraction (e.g. optimal filter) → storage

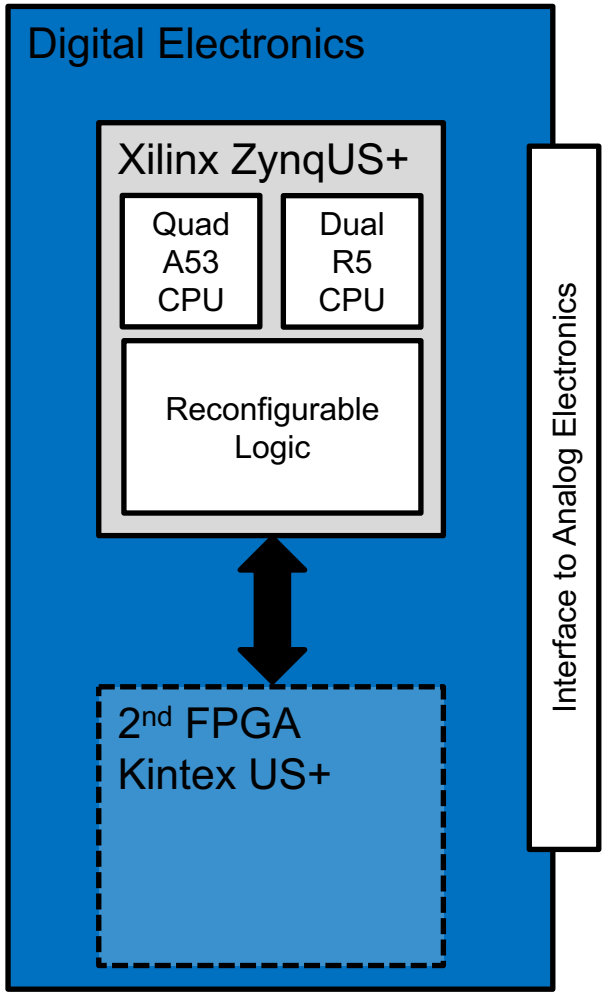

RF frontend and ADC/DAC

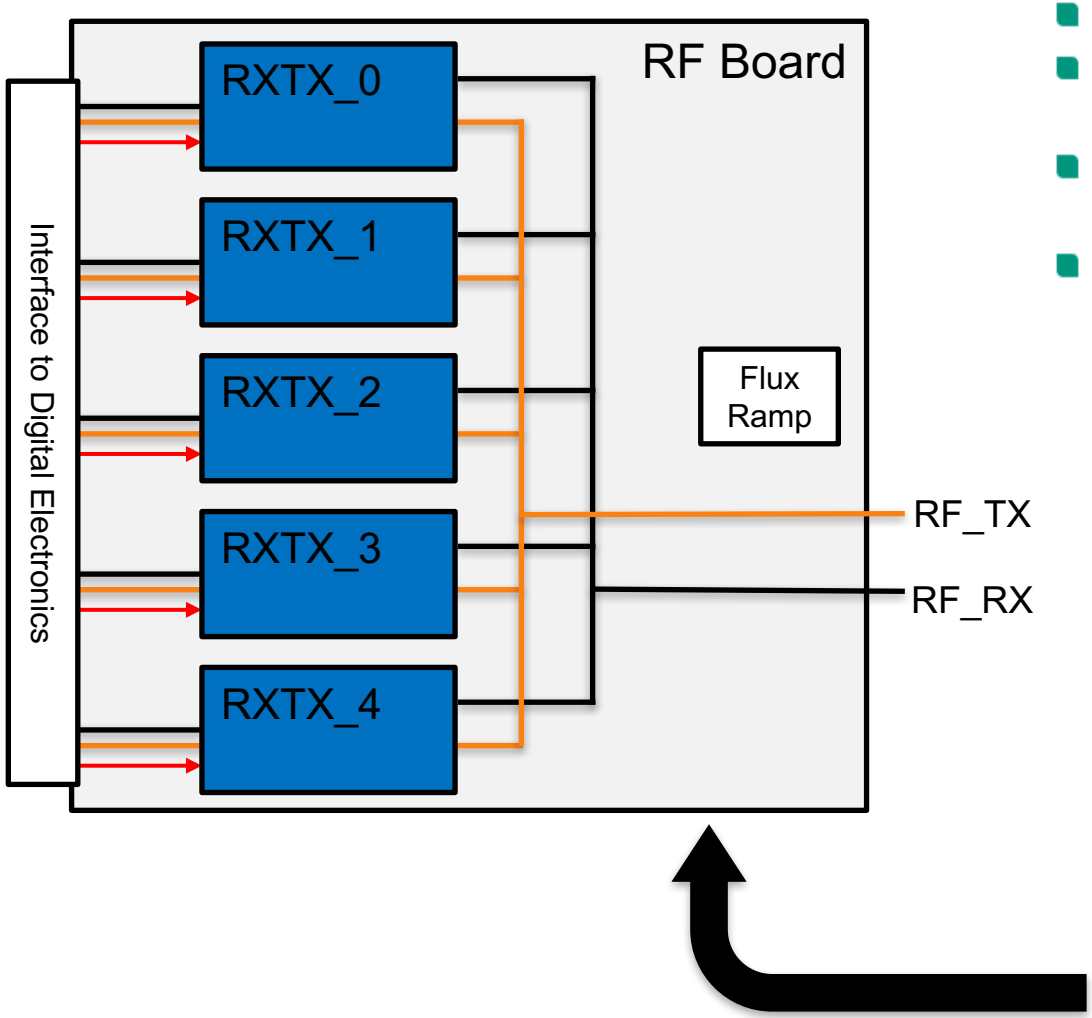

- 4 GHz total analog bandwidth (4-8 GHz)
- 5x 1 GSPS 16 Bit I/Q ADC = 20 GB/s (each covering 800 MHz)
- 5x 1 GSPS 16 Bit I/Q DAC = 20 GB/s (each covering 800 MHz)
- configurability
  - LO, ADC, DAC configuration
  - amplification, attenuation, filter, mixer tuning, …

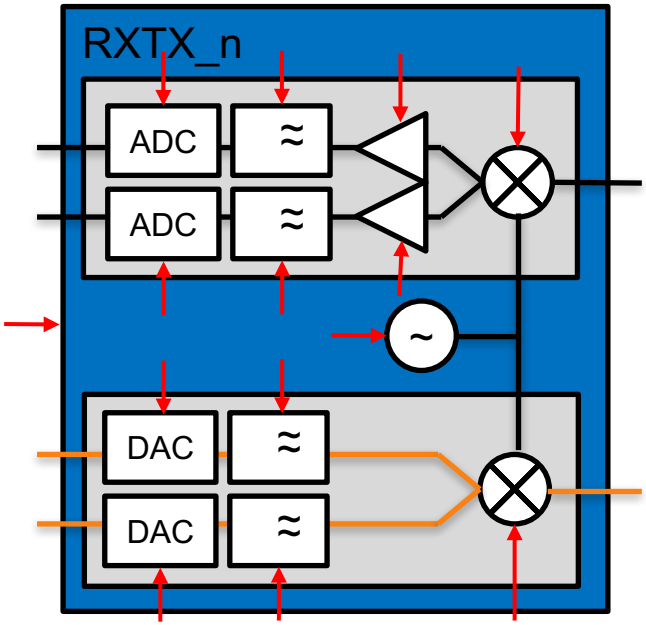

← Configuration ports

Multiplexed MMC readout: proof of concept

Goal Readout of two channels

Setup

Xilinx VC707
ADC: TI ADS54J69 EVM
DAC: TI DAC39J84 EVM
RF Frontend: KIP setup, KIT setup

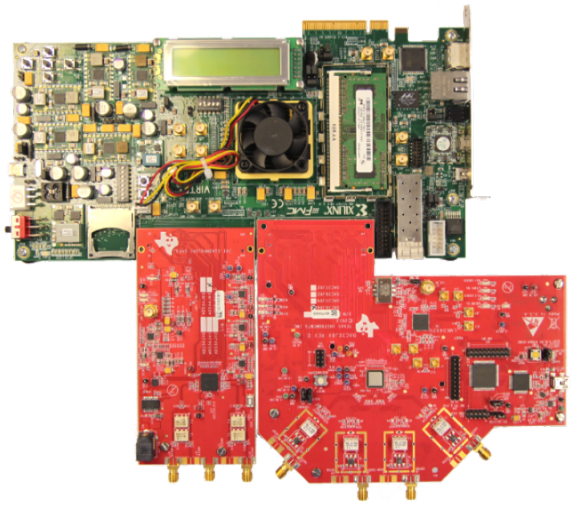

HW setup

raw data measurement

- test of infrastructure
- freq. comb generation
- record raw data

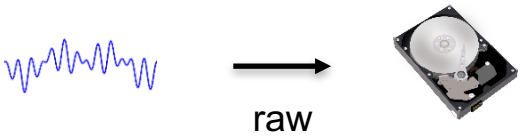

on board channelization

- long-time measurement
- functional test DDC
- record pulses

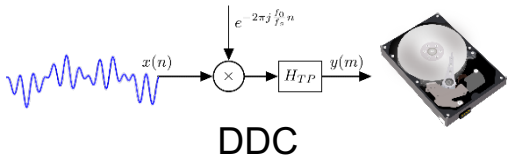

Firmware for raw data measurement

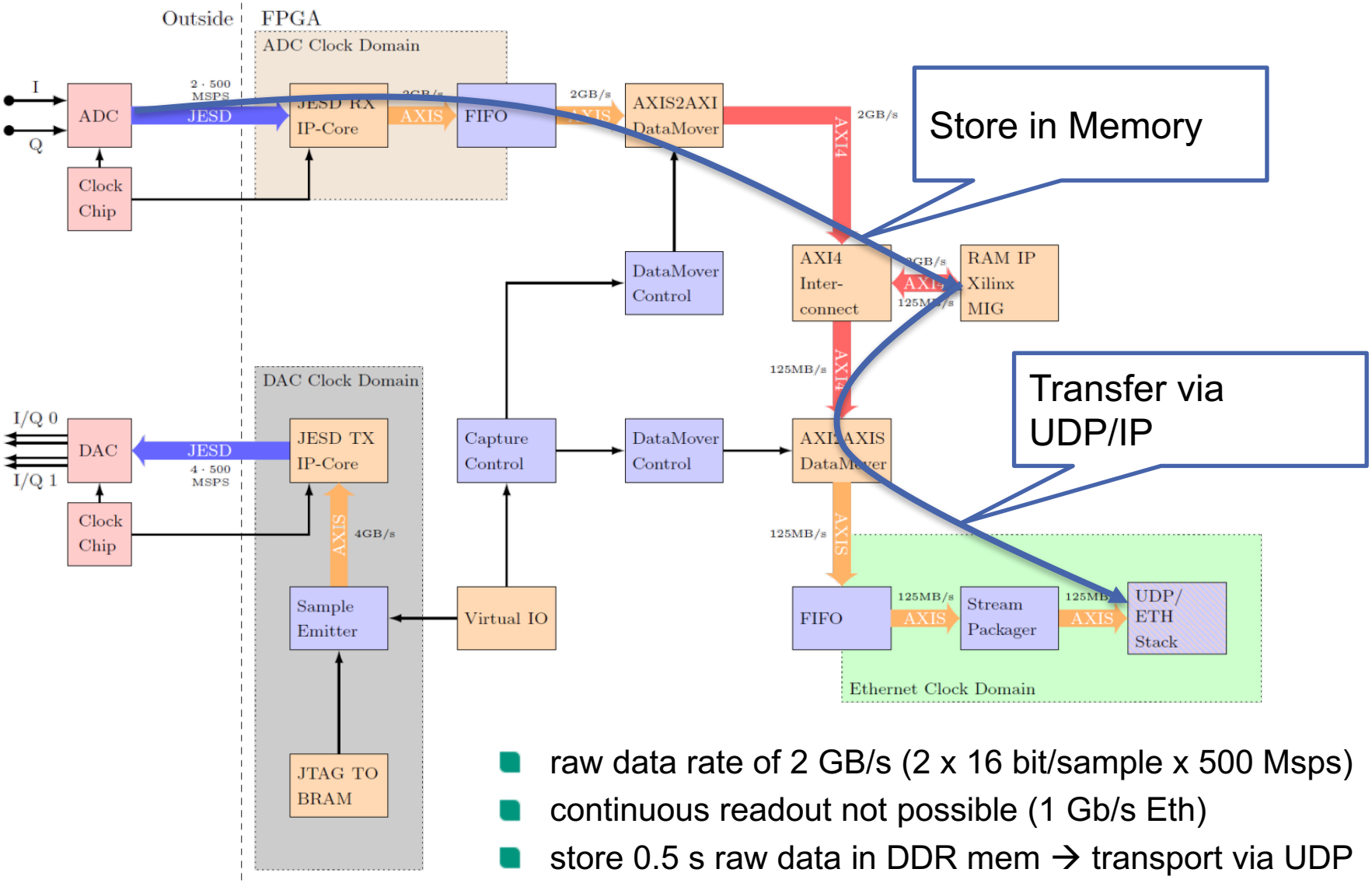

- raw data rate of 2 GB/s (2 x 16 bit/sample x 500 Msps)
- continuous readout not possible (1 Gb/s Eth)
- store 0.5 s raw data in DDR mem → transport via UDP

Interpretation raw data

- channelization: digital down conversion (DDC) in software
- measurement contained 5 tone frequency comb and a periodic modulation on the detectors SQUID
- extraction of the signal from four resonator feedbacks and one off-resonator-tone

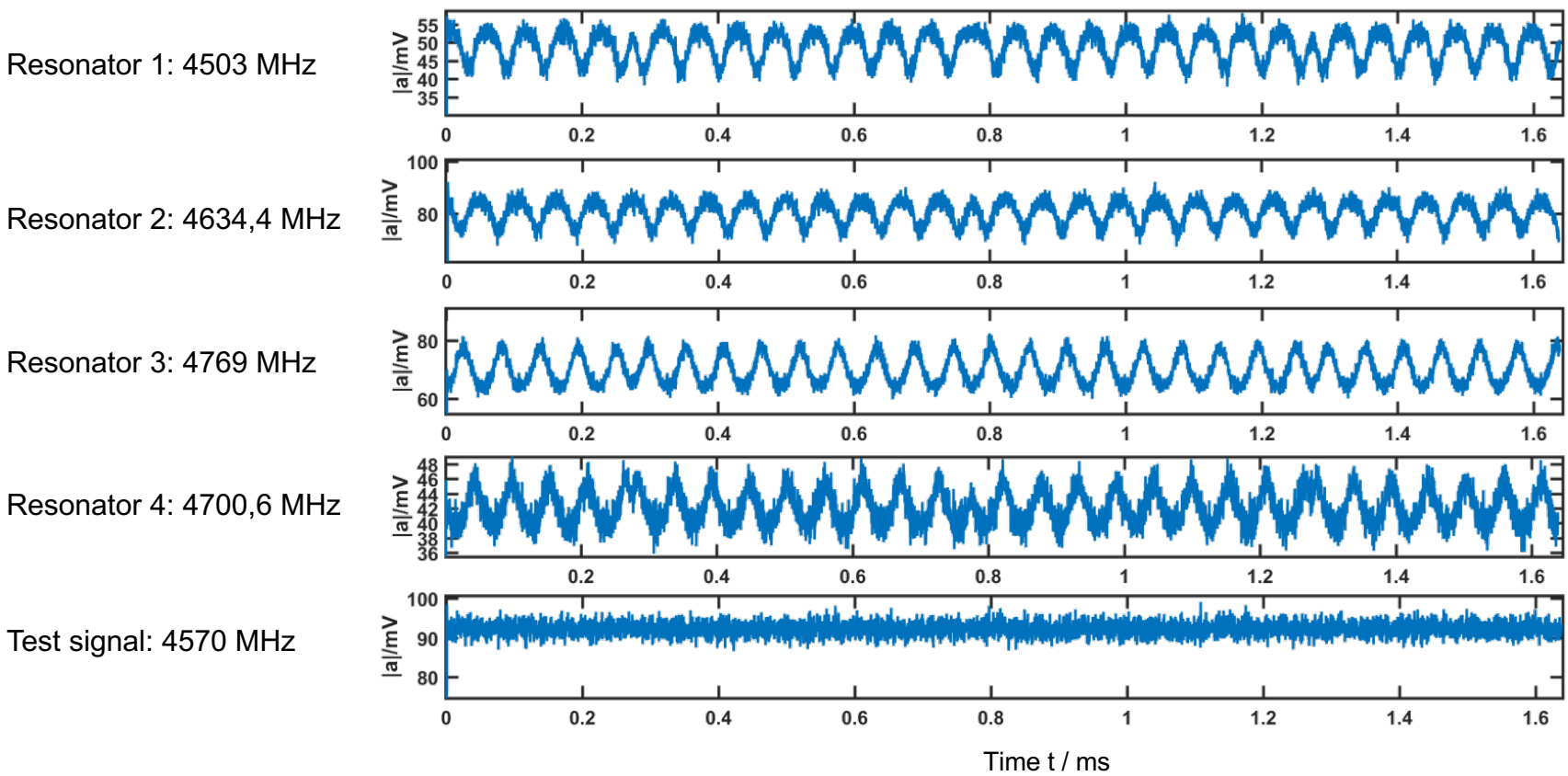

Firmware with DDC

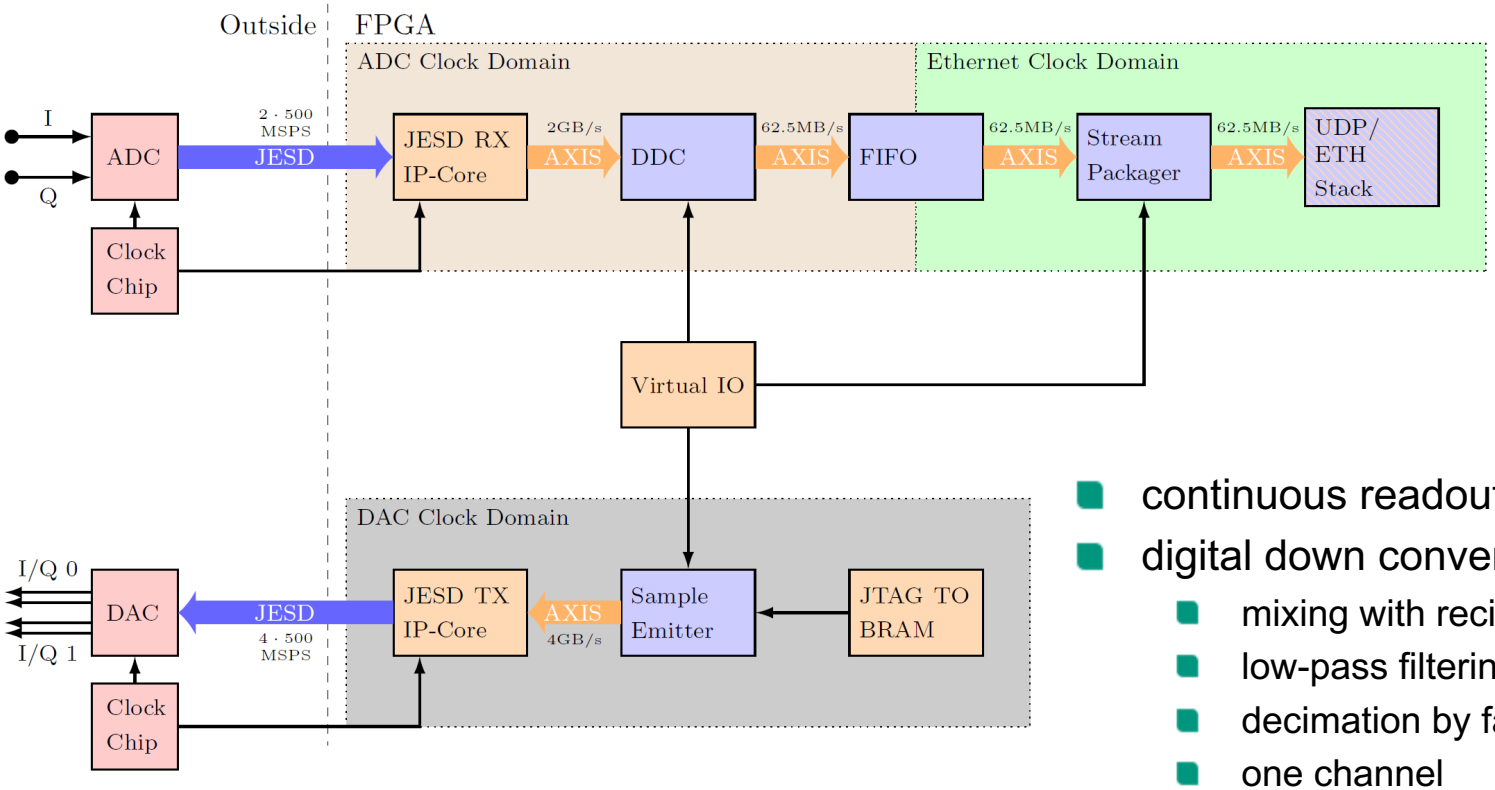

- continuous readout via 1 Gb/s Eth.
- digital down conversion
  - mixing with reciprocal frequency
  - low-pass filtering
  - decimation by factor 32
  - one channel
- 62.5 MB/s data rate for one channel

Measurements with DDC

- sensor signals with DDC directly visible:

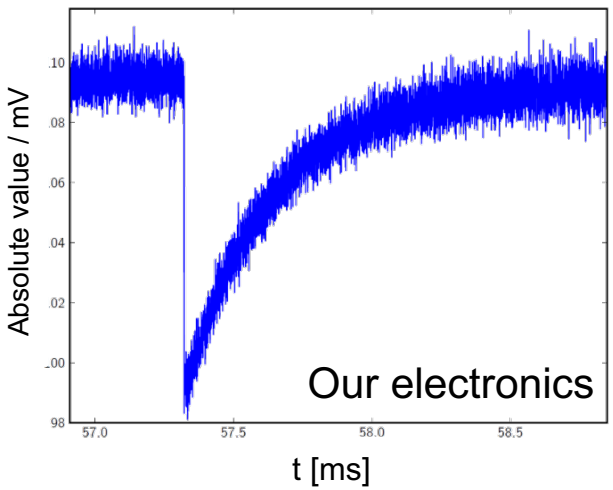

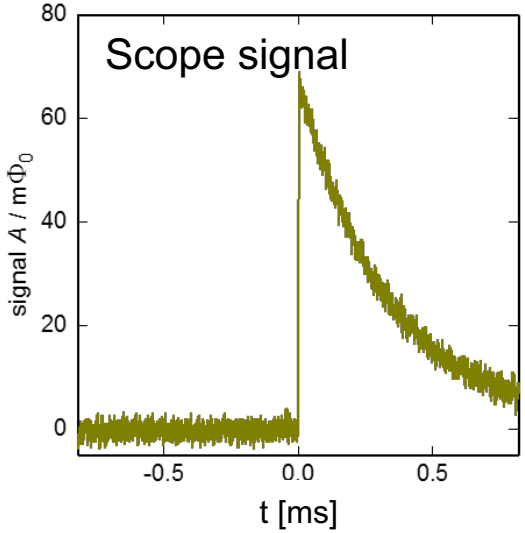

- measurement with modulation:

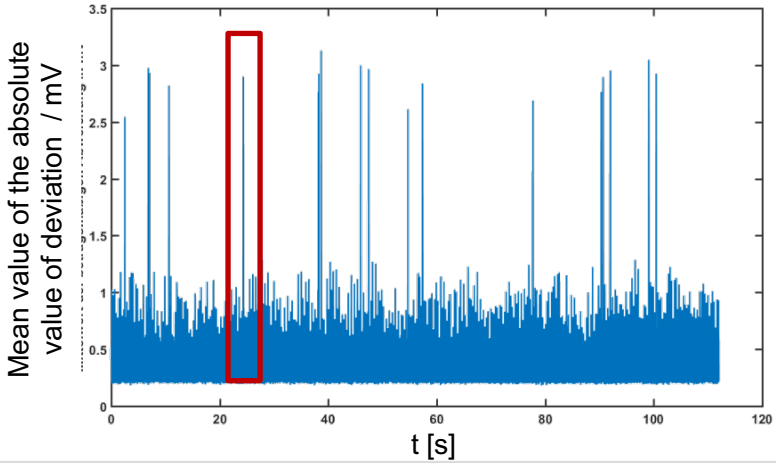

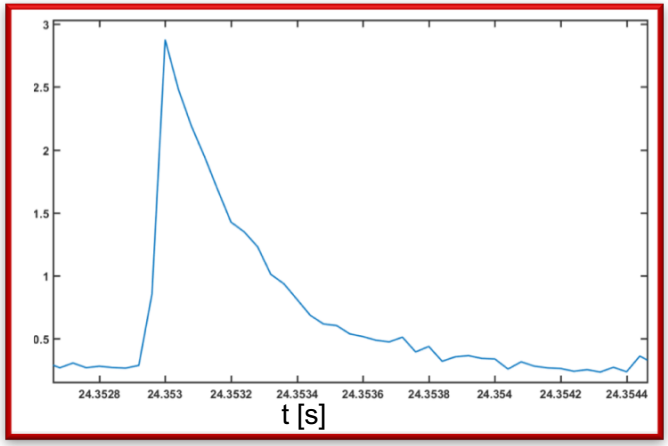

RF setup

Cryo TX

DAC

Cryo RX

ADC

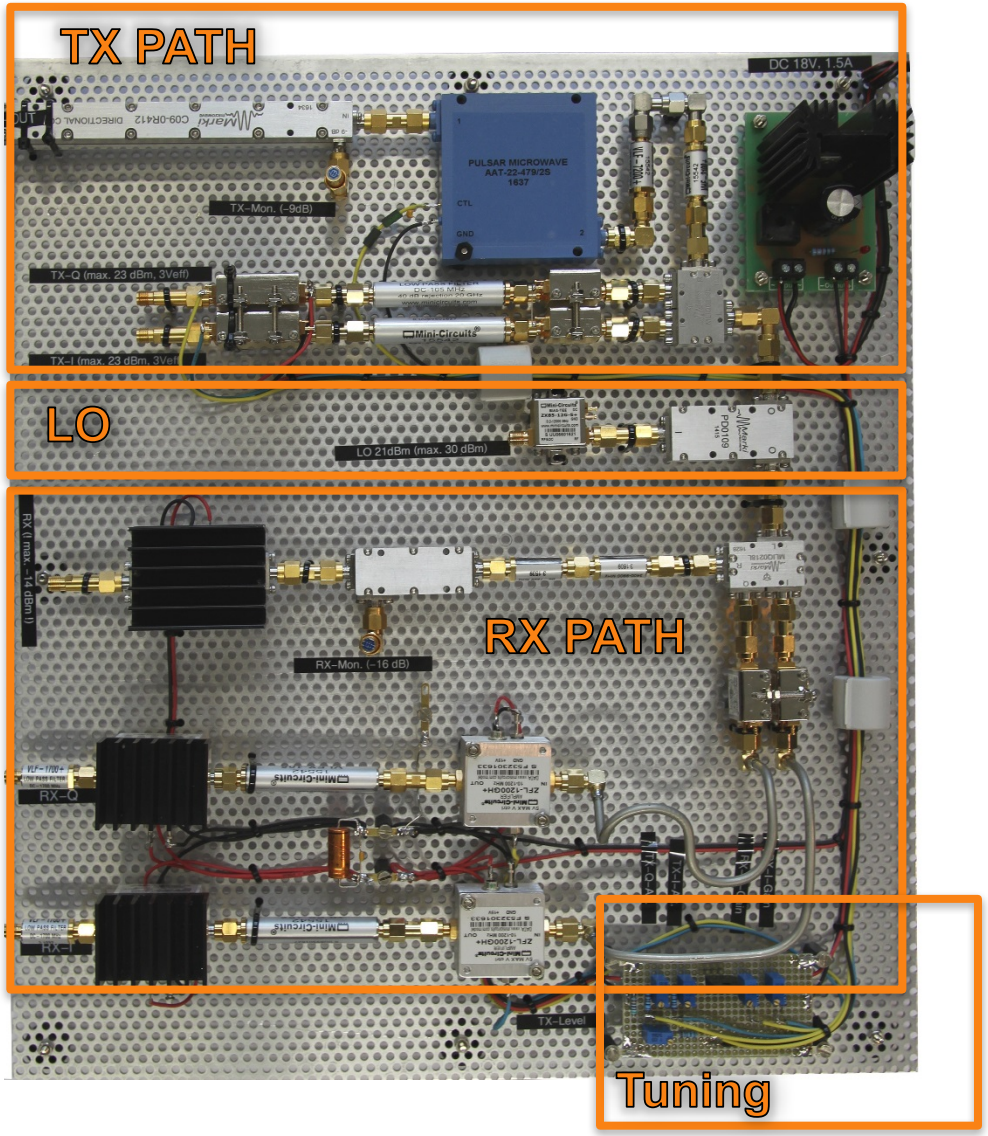

- IQ-Mixer
  - MLIQ0218L
  - 2 – 18 GHz HF
  - 0 – 2 GHz RF
  - 29 dB sideband suppression
- ± 230 MHz complex baseband
- variable attenuation and amplification
- monitoring

Summary and outlook

- **Metallic magnetic calorimeter have excellent properties for a wide range of applications**

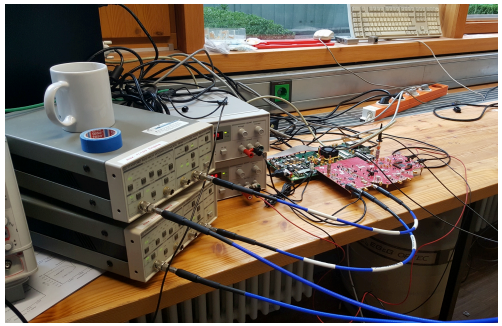

- **Readout of arrays is complex due to FDM**

- **First proof of concept was successfully built**

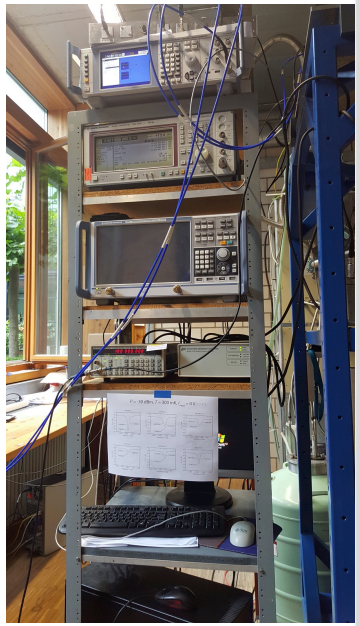

- **Measurements delivered very promising results**

- **ECHo-100k systems development started**

Thank you for your attention.