High-power target development for the next-generation of ISOL facilities

Lucia Popescu (SCK•CEN)

lpopescu@sckcen.be

SCK•CEN
STUDIECENTRUM VOOR KERNENERGIE
CENTRE D'ETUDE DE L'ENERGIE NUCLEAIRE

Outlook

- Motivation for high-power target development
- Introduction to high-power targetry
- Short review of various high-power target concepts
- Summary & Outlook

Motivation for high-power target development

- Exotic nuclei: highly-interesting study laboratories, challenging the current nuclear-physics models
- Difficulties encountered in delivering beams of such exotic nuclei:
  - Extremely low production cross sections
  - Overwhelming production of unwanted species in the same beam-target interaction
  - Very short half lives of the nuclei of interest.
- Some of the "targetry" solutions to improve RIB production (yields & purity):
  - Use of different target materials (more favorable cross sections, favoring isotope release, etc.)
    see presentation by JP Ramos (Session 1)
  - Optimize target configuration
  - Use different primary-beam energies
  - Use **higher beam-power on target** (higher driver-beam intensity)

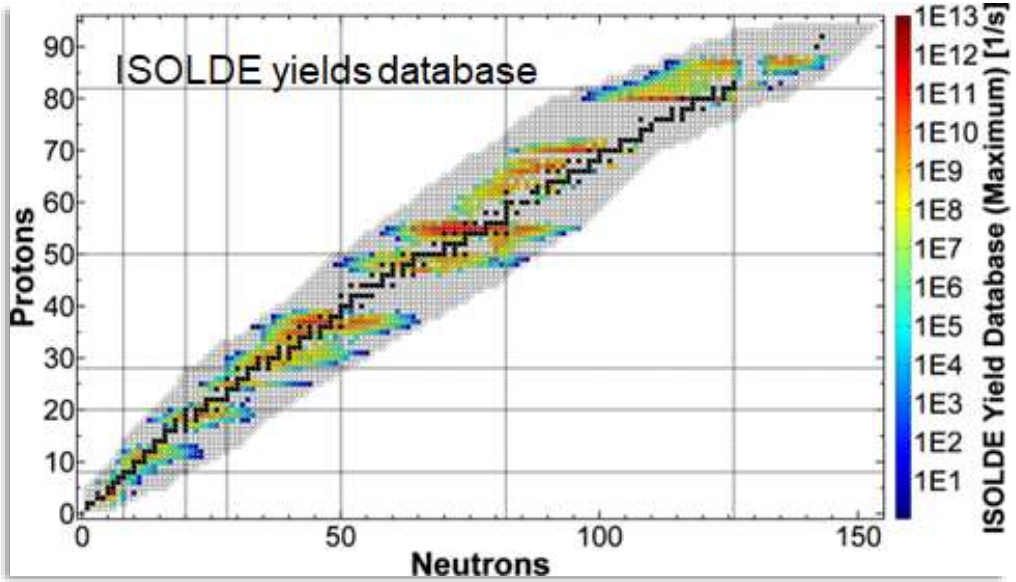

Setting the ground

- Low-power targets require electric heating in order to reach the temperature regime specific to the evaporation of desired isotopes (e.g. ISOLDE targets)
- High-power targets are heated by the beam-power deposition and require heat removal during operation in order to prevent melting (e.g. ISAC targets)
  - Careful engineering design to ensure uniform temperature profile in the target and its container
  - Highly dependent on accelerator operation (continuity of the driver beam on target)
    - Beam interruptions affect the integrity of the target (target material & target container)
    - In the absence of electric heating, isotopes release stops during beam-off periods
- Different challenges for high-power targets when implemented at different beam energies:

$W_{beam} = I_{beam} \times E_{beam}$
$W_{dep} = I_{beam} \times \Delta E$

$E_{beam}\downarrow$, $W_{beam}\downarrow$ but $\Delta E \uparrow$ => $W_{dep} \uparrow$

The deposited-power **density** is (much) higher when targets are irradiated by low-energy beams => different target concepts needed

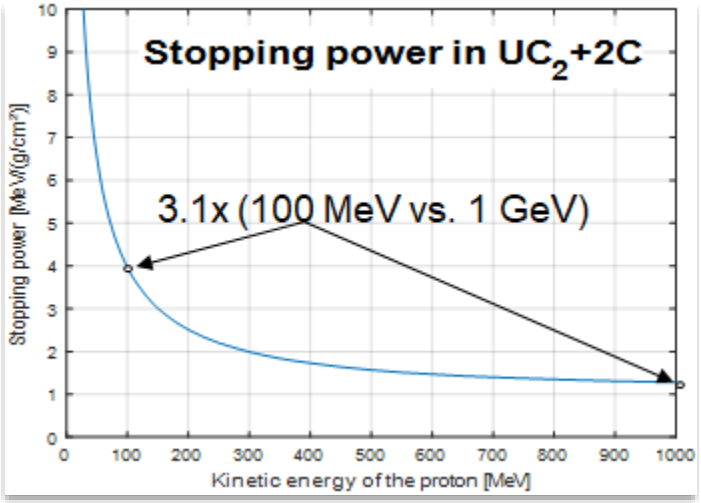

Should one ever use low driver-beam energies?

RIB production - Energy dependence

- FLUKA simulations for isotopes production by a p-beam of various energies on a U-based ISOL target)

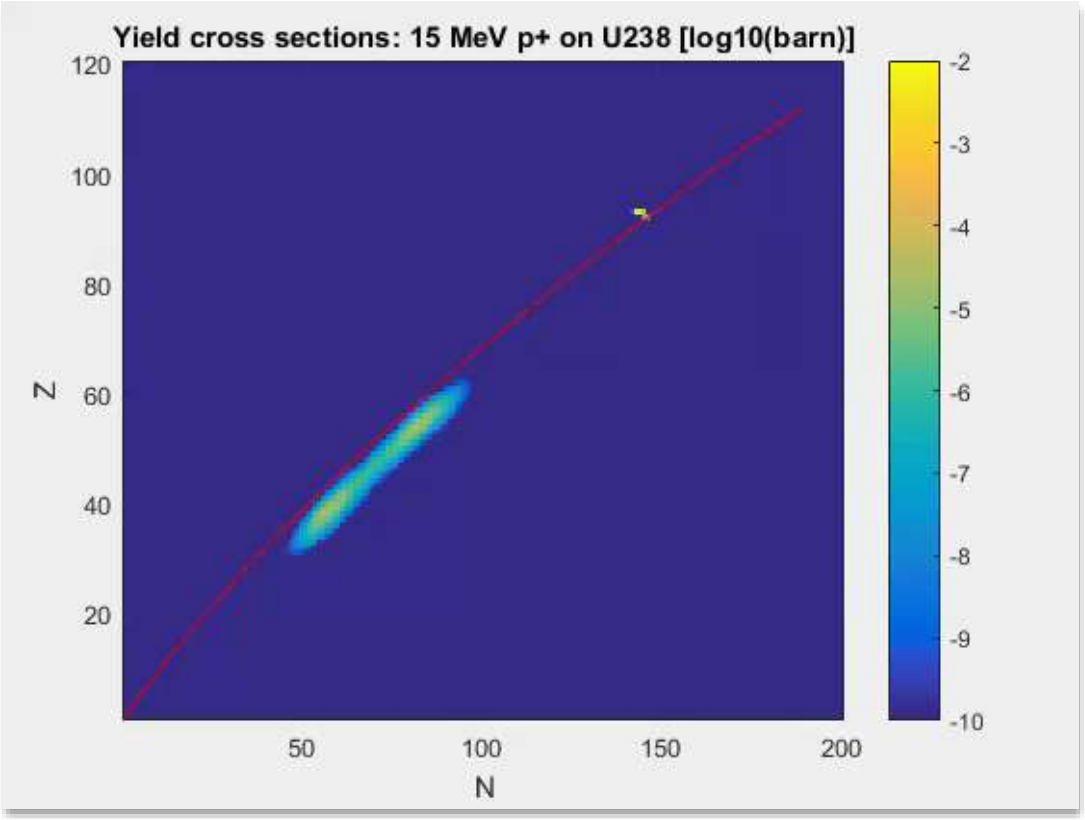

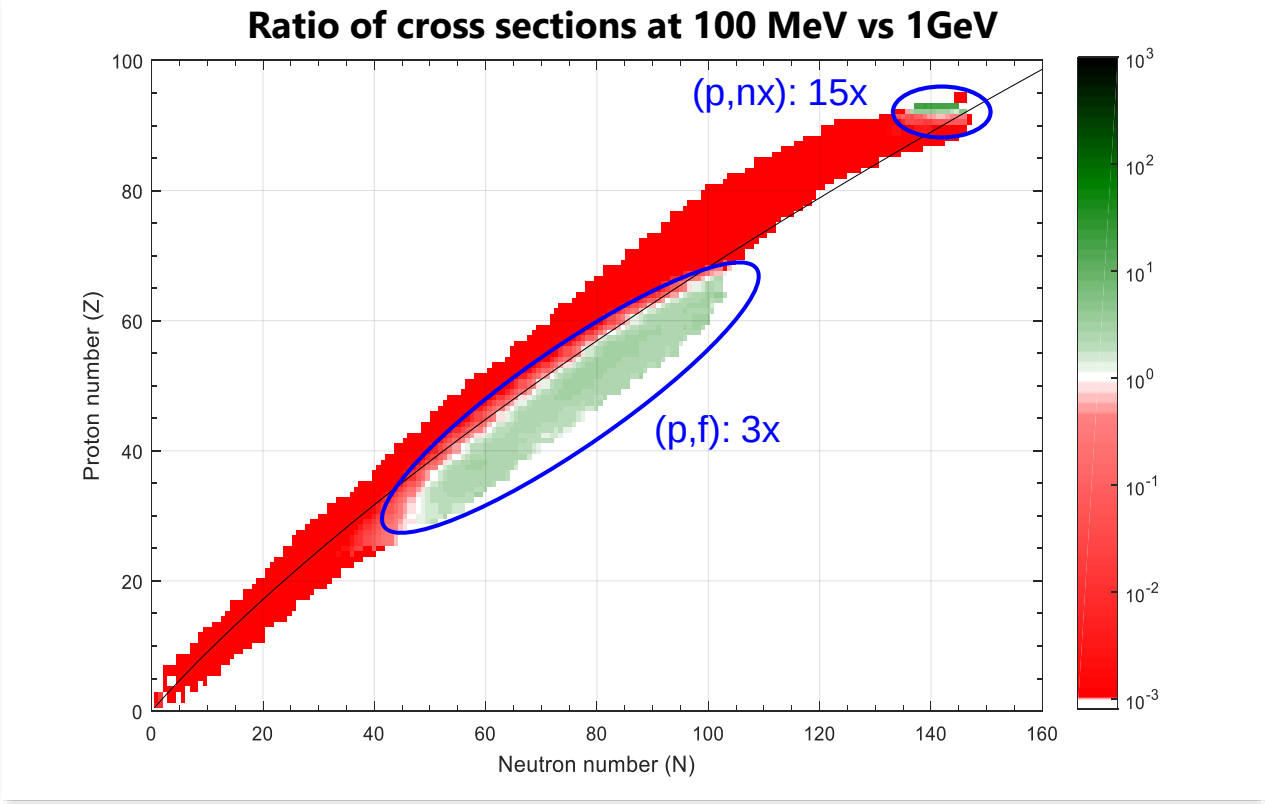

- Using various primary-beam energies one populates different regions of the nuclear chart

Targets operating in “converter mode”

- Primary beam interacts with a converter => n
- Fission induced in the ISOL target by neutrons
- Limited number of reaction channels are open
  - Increased purity of the RIB
- Decoupling beam-power deposition from target heating
  - Avoiding temperature gradients in the fission target
  - Allows further increasing the driver-beam power (↑RIB yield)
- Fission target less prone to beam-interruptions issues:
    - Thermal stress (target material & container)
    - Suppression of isotopes release from the target
- Limited production of α-emitters (licensing limitation)

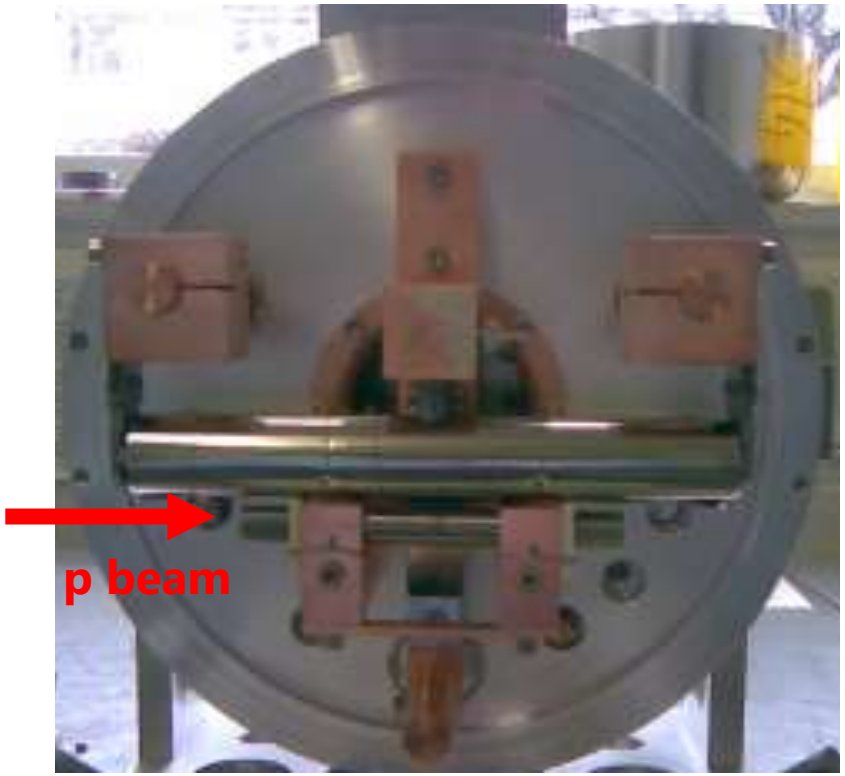

Neutron converter at ISOLDE,
T. Stora, EURISOL-DF conference, Leuven, 2016

High-power targets: summary of various concepts

- High-energy high-power targets
  - Direct targets:
    - **ISAC** hp target
    - EURISOL 100-KW target concept: **LIEBE**
  - Converter targets:
    - **p2n**
    - **EURISOL** Multi Megawatt concept

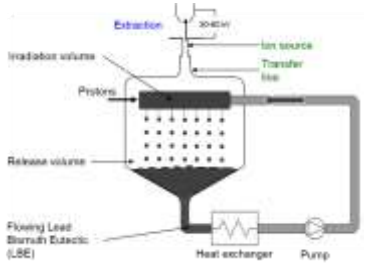

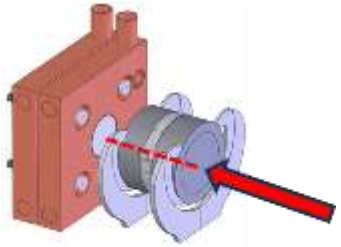

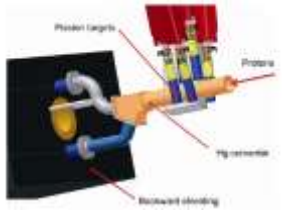

- Low-energy high-power targets
  - Direct targets:
    - **SPES**
    - **ISOL@MYRRHA phase 1**
  - Converter targets:
    - **ARIEL**
    - **SPIRAL2**

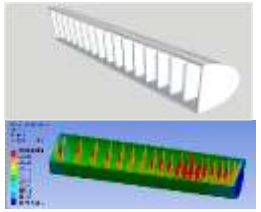

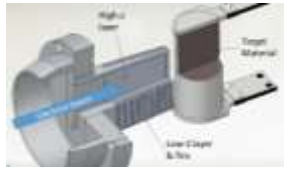

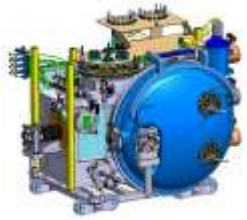

High-power direct targets: ISAC

TRIUMF high power target design (500 MeV)

- 20-mm diameter Ta target container
- Composite carbide target discs to enhance heat conduction within the target material and into target container
- 55 mm x 55 mm Ta fins for enhanced radiative cooling (ε_{eq} = ~0,9)
- Capable of handling 17 kW deposited beam power
- Beam on actinide targets limited to 10 μA by licensing

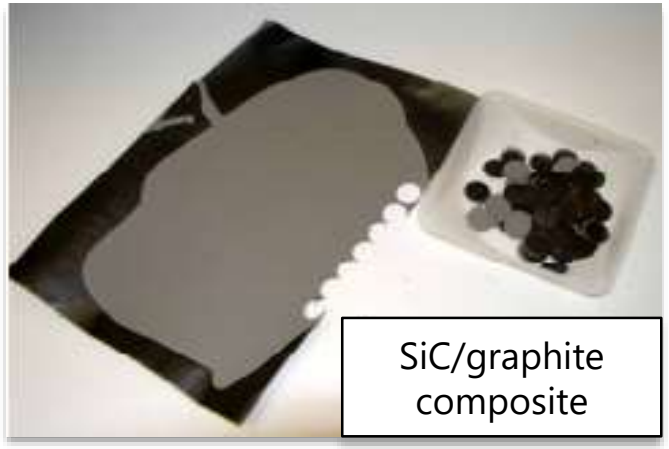

Marik Dombsky, "Current status & future plans for the TRIUMF-ISAC Radioactive Ion Beam Fiacility", Workshop on nuclear physics at the MYRRHA accelerator, Brix annual workshop, April 2008, Mol, Belgium.

High-power direct targets: LIEBE

- **Molten-metal loop-type direct target** (concept proposed in EURISOL-DS)
  - Decoupling production & release & heat removal
  - Thicker target (~200 g/cm^2)
    - Higher in-target production
  - Dedicated release volume
    - Formation of small target-material droplets (~10 µm)
    - Faster diffusion = increased release efficiency
  - Dedicated heat exchanger
    - Better heat removal
    - Possibility to have a higher driver current

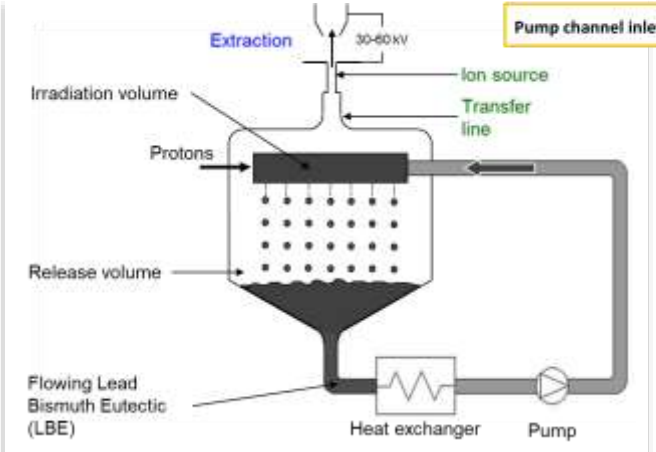

Proposed in EURISOL DS

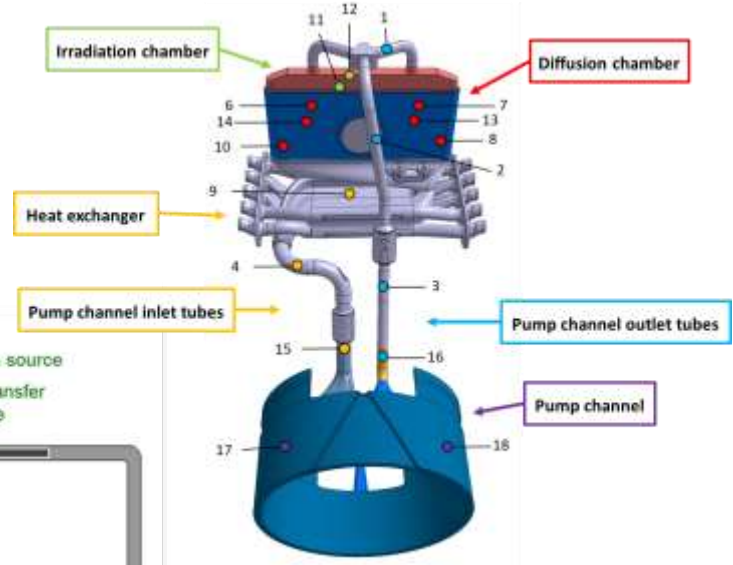

LIEBE main components

- **LIEBE project**
  - Develop and test a prototype of a molten-metal loop-type direct target
  - Offline and online tests at ISOLDE
  - Collaboration between 6 institutes: CEA, CERN, IPUL, PSI, SCK•CEN, SINP
  - Extraction of short-lived Hg isotopes

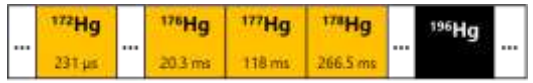

High-power direct targets: LIEBE

LIEBE target currently under offline commissioning

- Liquid metal flow assessment
  - Cavitation limits checked at IPUL
  - Minimum flow for release optimization achieved (0.13 L/s)
- Target manipulation and installation tests
- Fully operational target now on test-stand with mass separator
  - Vacuum testing
  - Pump vibration monitoring (alignment, cavitation)
  - Thermal testing (check for cold zones)
  - Mass scans
- Vacuum leak issue
  - Deformation of the vacuum vessel due to thermal stress
    - Thermal radiation of hot ion-source (2000°C)
  - New vacuum vessel design solved the issue

KUKA robot handling the LIEBE target in the ISOLDE target area

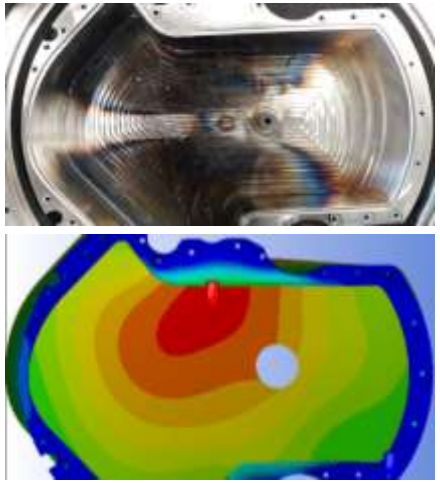

ANSYS simulation of the vacuum vessel deformation

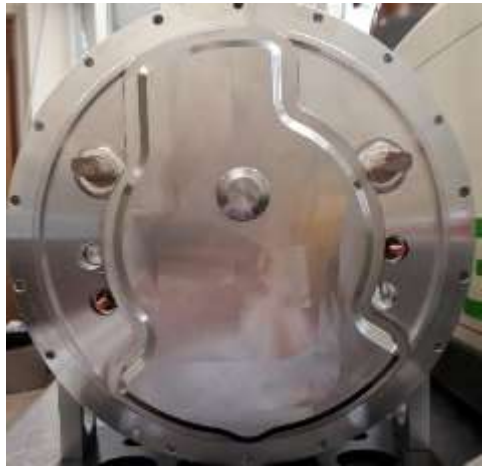

New vacuum vessel design coping with the leak issue.

High-energy high-power converter targets: p2n

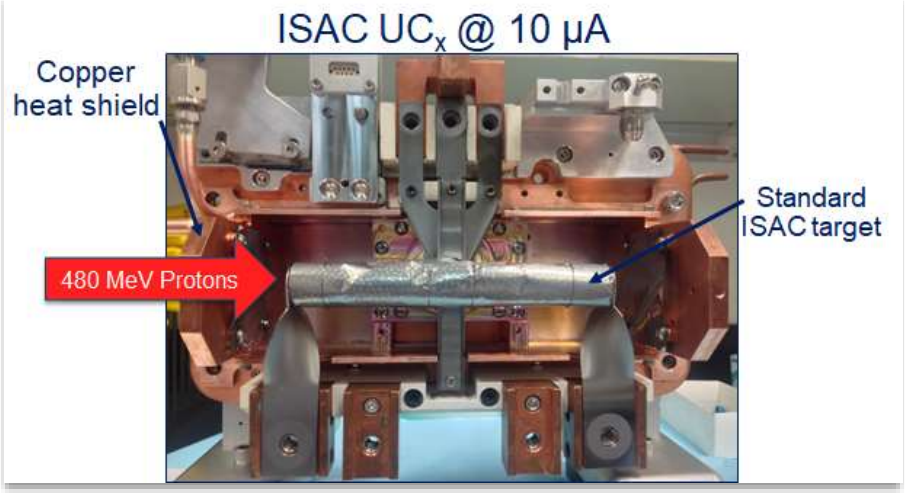

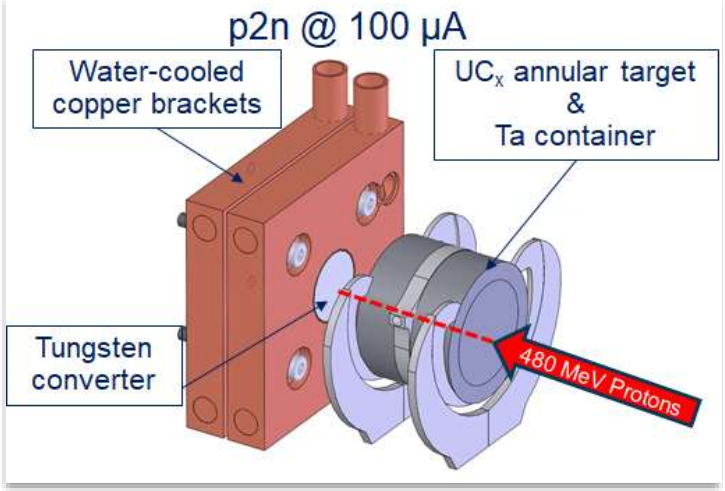

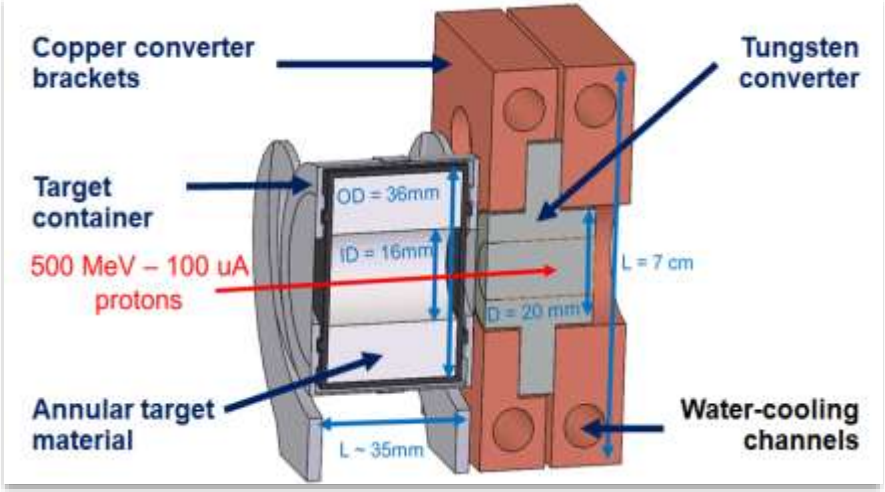

- Match/improve ISAC yields while suppressing proton-rich isobaric components
- Overcome ISAC UCx beam intensity limitation due to alpha-emitters activity and radiotoxicity
- First high power p2n operation at full proton beam power:
  - ~7 kW deposited in 2 cm
  - Increase geometrical efficiency
  - Decoupling target heating and incoming proton beam current

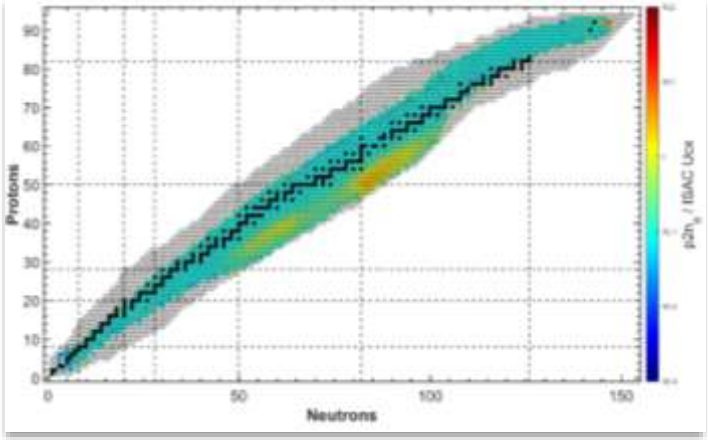

High-energy high-power converter targets: p2n

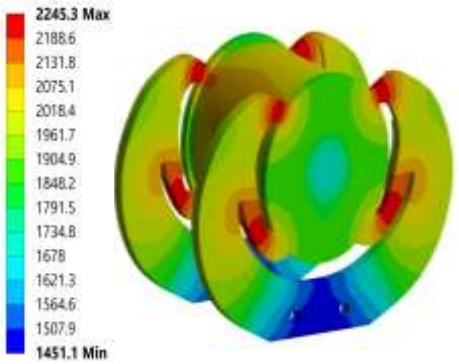

Total beam power deposited = 7.5 kW
Max T = 2100 C

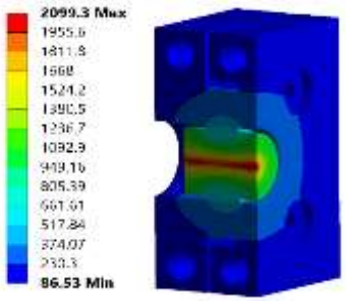

Total current = 1500 A
UCx temperature >1800 C

Off-line tests

- Current = 1500 A
- Temperature exceeding expectations
- Target failed after day
- Second prototype ongoing

- Characterize the contact resistance W – Cu alloy
- Thermal simulation benchmarked
- Torque on screws determined

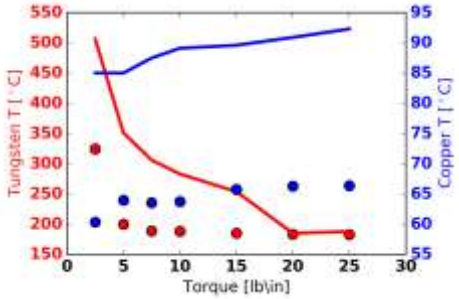

On-line operation (20 shifts approved. Request for beamtime in Spring 2019)

- Extraction of several beams of different elements:
  - Neutron-rich nuclei → Sn, Cd and Zn to be maximized;
  - Main related isobaric contaminants → Lanthanides, Cs, Rb
- Laser Ion Source (LIS) operated for ionizing Sn, Cd, Zn
- ISAC yield station: Absolute yield of the reference isotope
- TITAN MR-TOF-MS: Isobaric beam composition

expected

ISOTOPE	ISAC UC_x	p2n-a	p2n-a / ISAC
130Cd	6.42E+06	3.66E6	0.5
133In	9.19E+06	1.66E7	1.83
135Sn	1.70E+07	4.36E7	2.57

CONTAMINANT	ISAC UC_x	p2n-a	p2n-a / ISAC
130Cs	3.10E+09	2.41E9	8E-2
133Cs	1.37E+10	1.15E9	8.37E-02
135Cs	9.14E+09	8.68E8	9.50E-02

High-energy high-power converter targets: p2n

- Complementary tests at ISOLDE

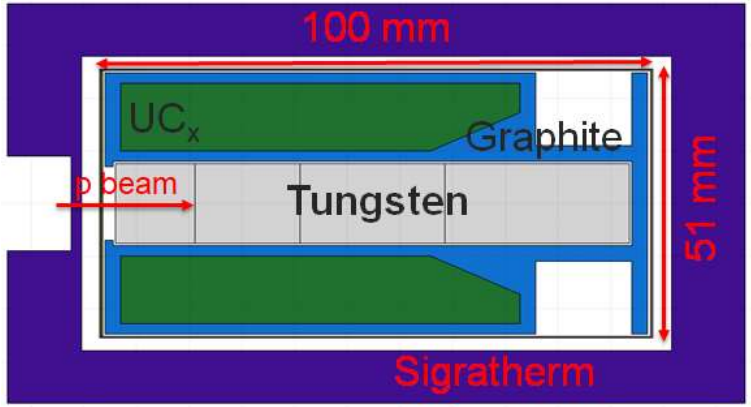

Converter will act as internal heat source

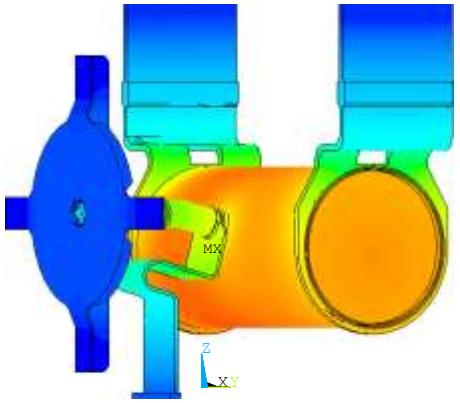

M. Ballan, et al.

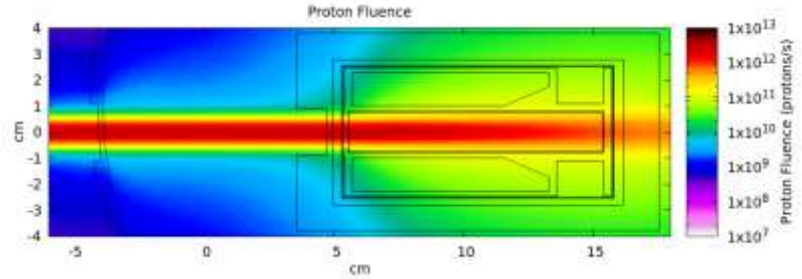

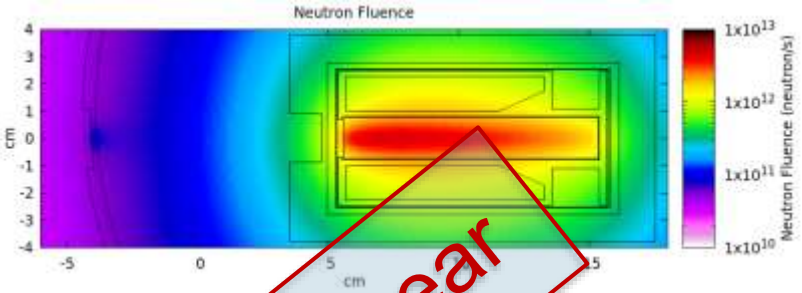

- Normal shielding: several metal foils stacked

- **New shielding: Sigratherm material (1-cm thick)**

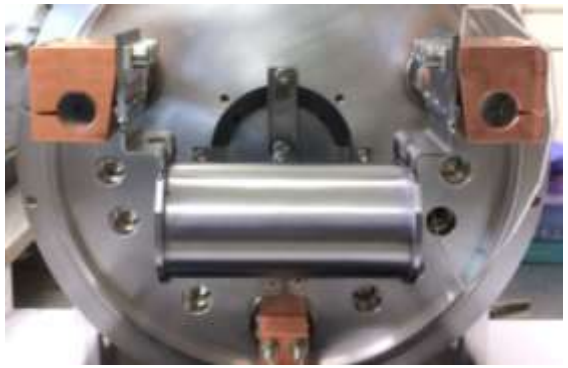

To test online this year

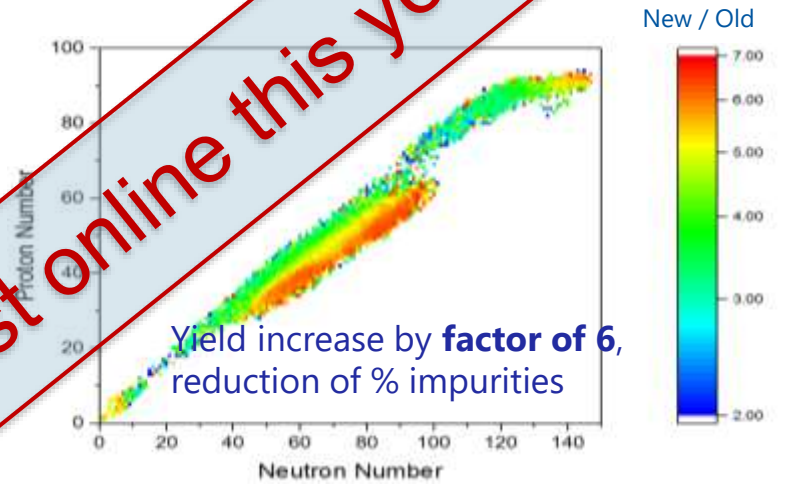

Yield increase by **factor of 6**, reduction of % impurities

High-energy high-power converter targets: EURISOL multi-MW target

- 4-mA 1-GeV p-beam on a liquid-metal converter target surrounded by multiple fission targets allowing high in-target production yields (~10^{15} fissions/s/mA)

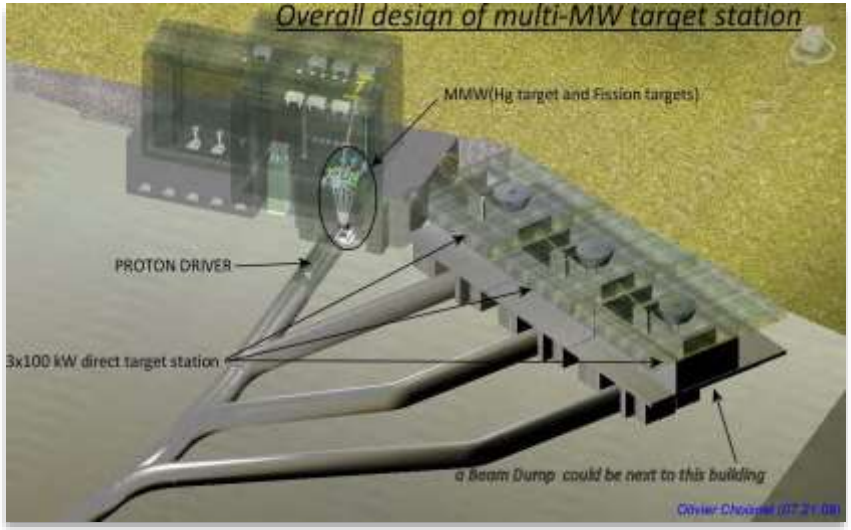

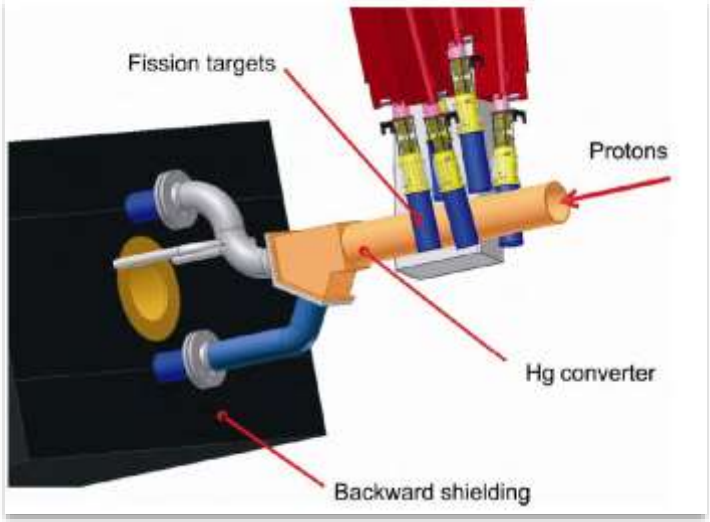

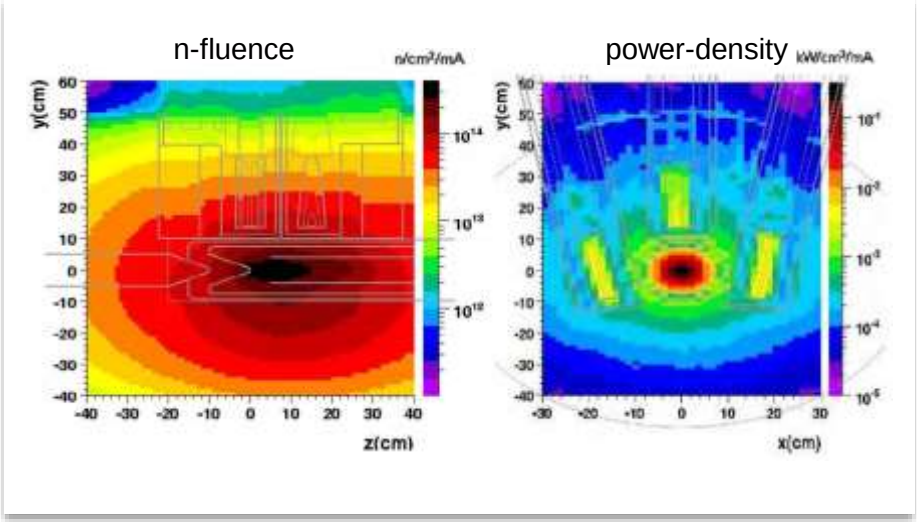

- Ambitious project proceeding through an intermediate step: **EURISOL-DF**
  - Realization of intermediate facilities:
    HIE-ISOLDE, SPES, SPIRAL2, ISOL@MYRRHA
  - Preparing the physics and technology for the (MW) EURISOL facility

Low-energy high-power direct targets: SPES

- 50 mm diameter target container
  - Larger surface area to radiatively cool the target (8 kW)
- Lower energy protons (40 MeV)
  - More intense heat deposition in the target material
  - 7 thin target discs optimally distributed over the length of the target to get a uniform temperature distribution
  - Radiative cooling from target discs to target container
- Integrated beam dump

see presentation by A. Monetti (Session 2)

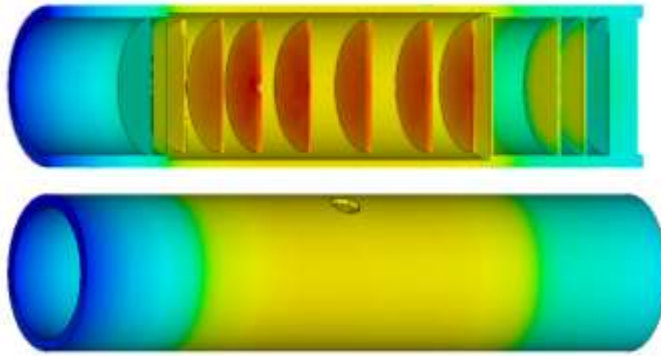

Low-energy high-power direct targets: ISOL@MYRRHA phase 1

- MYRRHA

	Energy	*Current*
MYRRHA phase 1	100 MeV	4 mA
ISOL@MYRRHA (PTF)	100 MeV	500 µA
MYRRHA phase 2	600 MeV	4 mA
ISOL@MYRRHA (PTF)	600 MeV	200 µA

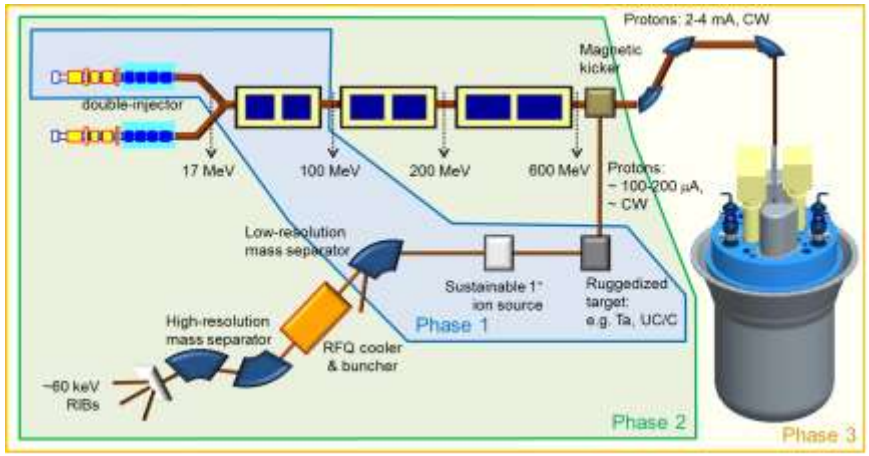

- The proton target facility (PTF)
  - upgradable to 600 MeV proton beams
  - ISOL system + spare irradiation pit

- Dedicated ISOL targets
  - Compact targets for the production of exotic/short-lived isotopes (physics)
  - Large high-power targets for the production of longer lived isotopes (applications)

Low-energy high-power direct targets: ISOL@MYRRHA phase 1

Non-actinide targets for day-1 operation of ISOL@MYRRHA

- Startup of the ISOL system with non-actinide targets
- Proposal: titanium targets for production of Sc isotopes
  - Ti-carbide as target material (T_{melt} = 3140°C)
- Target optimized for in-target production (part of PhD M. Ashford)
  - By variation of target material density (g/cm^2)
  - Limited to 10 kW deposited power (unfinned target container of ø4 cm, L=20 cm)
  - Limited to 300 µA beam current (beam window)
- 1D model for quick assessment of optimal target density (g/cm^2)
  - Followed by detailed FLUKA and ANSYS calculation
  - Optimal distribution of the discs to get uniform target temperature

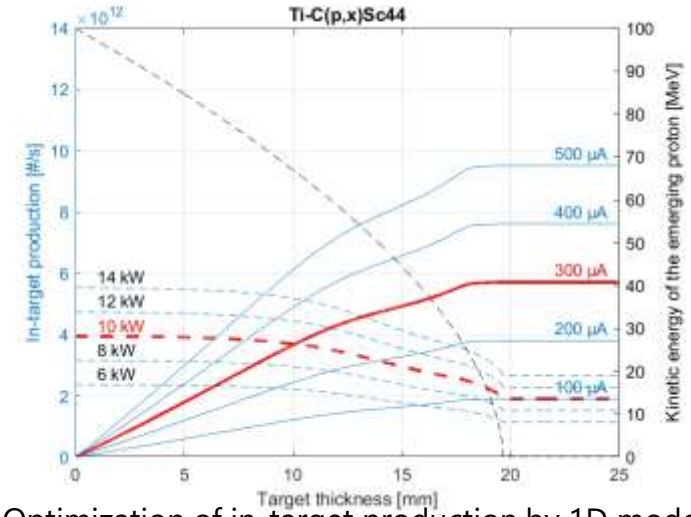

Optimization of in-target production by 1D model

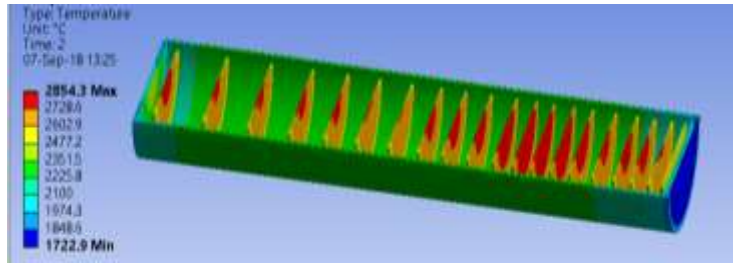

Titanium carbide 20 discs, total thickness 10mm

more detailed information on the poster 101, **M. Ashford** (SCK•CEN)

Low-energy high-power direct targets: ISOL@MYRRHA phase 1

- Two reference high-power target configurations
  - 10 kW / 300 µA: bare container (ø4 cm, L=20 cm)
  - 25 kW / 500 µA: finned container (projected licensing limit)
  - Carbide target discs spread over the length of the target => uniform temperature profile (similar to SPES targets)
  - Proton-beam rastering

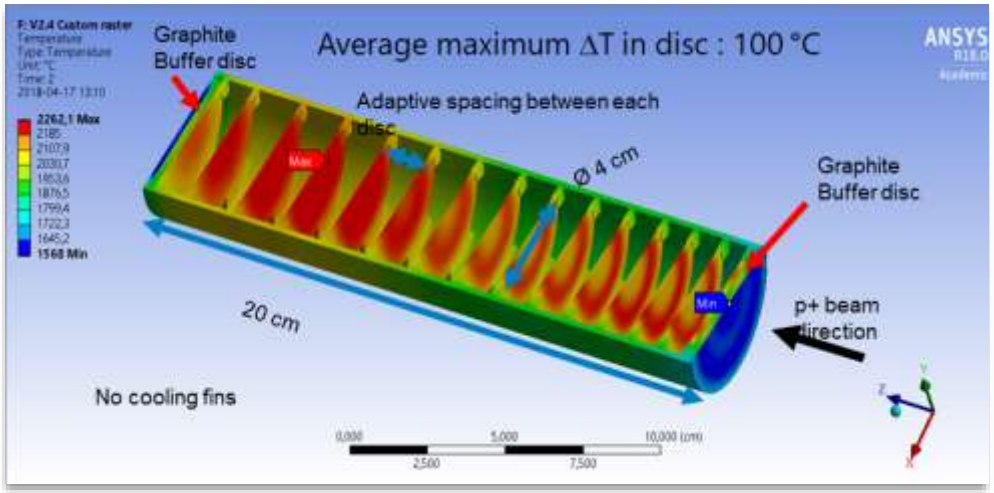

- 100 MeV is challenging for beam window design
  - Window 1: avoid proton beam line contamination (safety)
  - Window 2: avoid beam dump contamination (waste)
  - 100 MeV = high energy deposition in the windows
  - Large scattering when beam passes through target

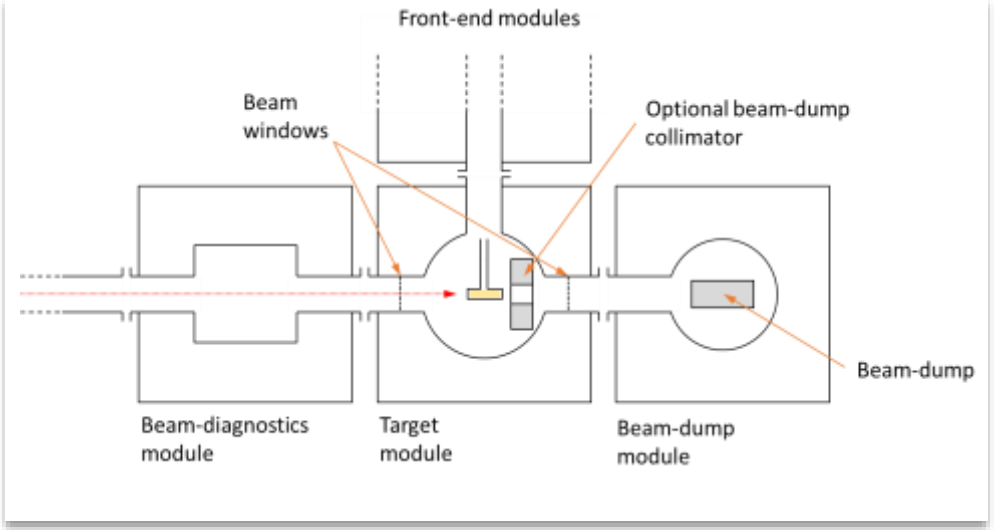

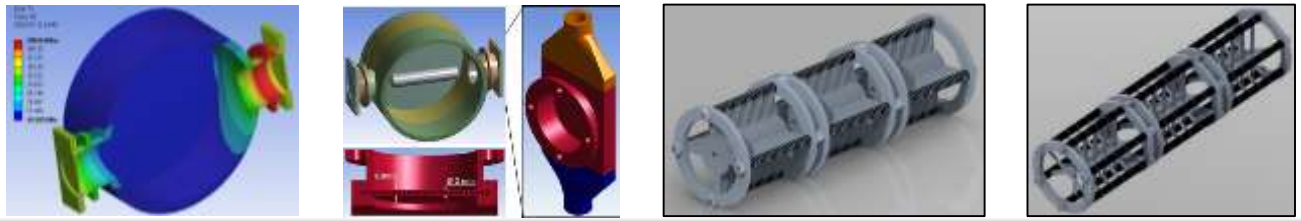

Low-energy high-power converter targets: ARIEL

- 35-MeV >100-mA electron beam on a (e-γ) converter target
- Water-cooling and thermal design optimized for 100 kW electron beam power operation (experimentally validated up to 10 kW driver beam power equivalent)
- Production of radioisotopes in the ISOL actinide target by photo-fission

converter

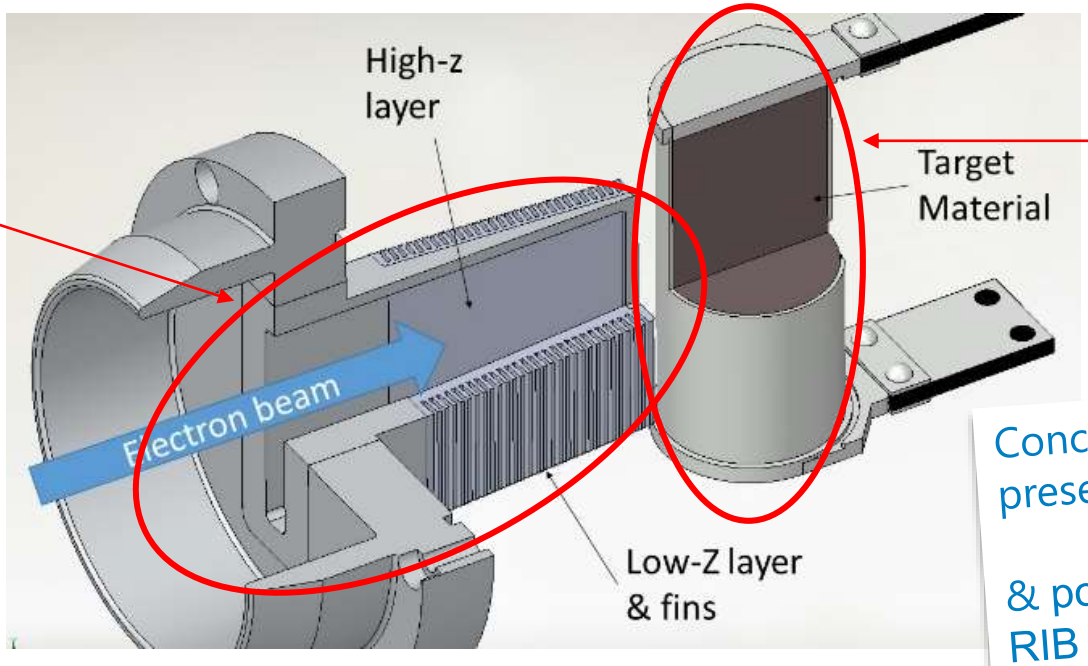

photo-fission target

Concept detailed in the following presentation by Thomas Day Goodacre

& poster 60: "High-power converters for RIB production"

B. G. Cade, L. Egoriti, and A. Gottberg, Thermal design of a 100 kW electron to gamma converter at TRIUMF, IPAC2018, Vancouver, BC, Canada

Low-energy high-power converter targets: SPIRAL2

- 40-MeV up to 5-mA deuteron beam on a rotating graphite wheel (converter)
- Large U-base ISOL target behind the converter

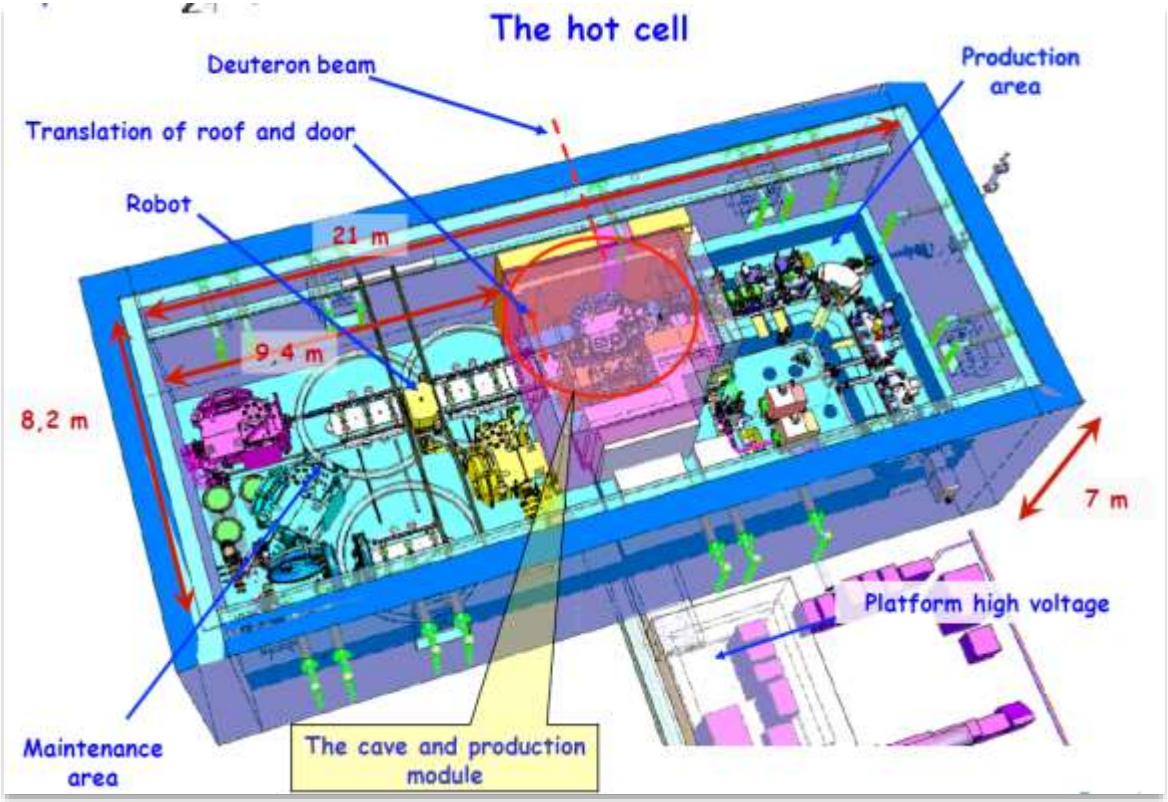

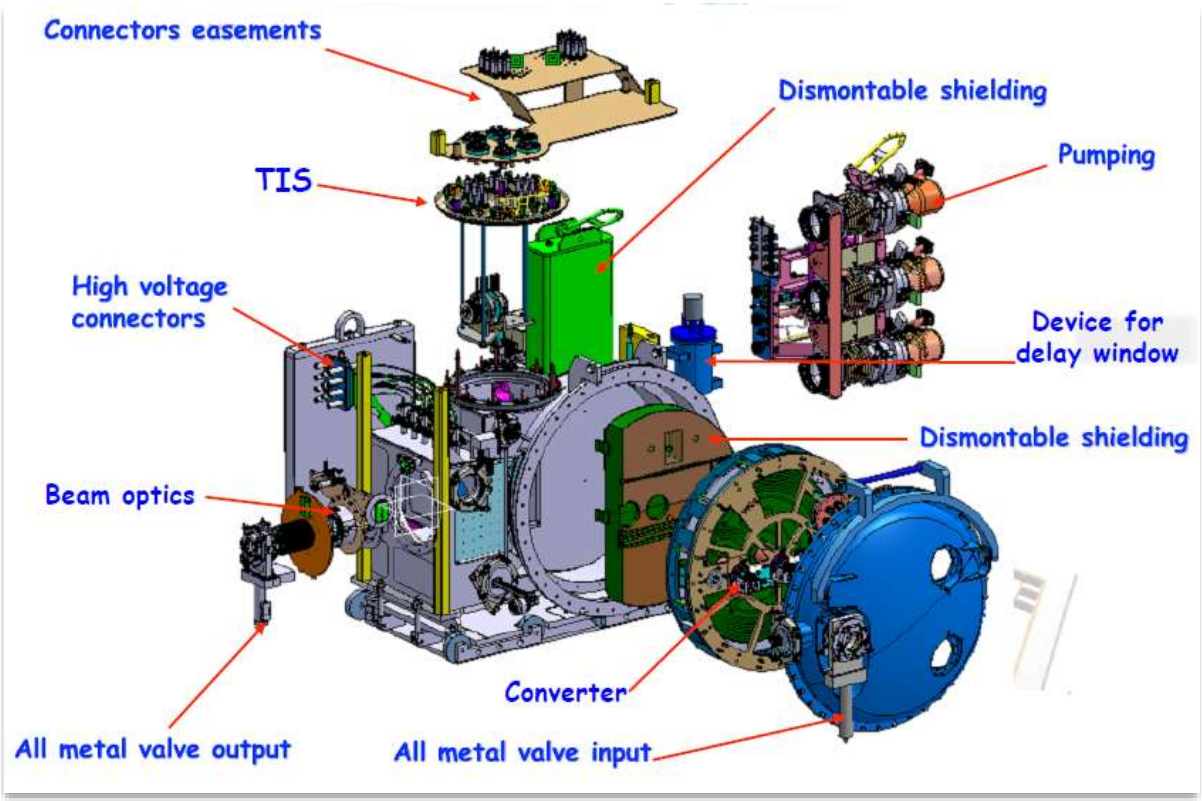

Y. Huguet, The production module, SPIRAL 2 week 2011

Summary and Outlook

- The high-interest in exotic RIBs motivates development of next-generation ISOL facilities
  - Advance in high-power targetry
  - Advance in target materials
  - Development of high-intensity ion sources
  - …

- Upcoming ISOL facilities implement high-power target technology at low driver-beam energies => innovative target concepts

- Current developments are paving the road towards the ultimate ISOL facility (in Europe):

EURISOL

SCK•CEN
Studiecentrum voor Kernenergie
Centre d'Etude de l'Energie Nucléaire
Belgian Nuclear Research Centre

Stichting van Openbaar Nut
Fondation d'Utilité Publique
Foundation of Public Utility

Registered Office: Avenue Herrmann-Debrouxlaan 40 – BE-1160 BRUSSELS
Operational Office: Boeretang 200 – BE-2400 MOL

SCK•CEN
STUDIECENTRUM VOOR KERNENERGIE
CENTRE D'ETUDE DE L'ENERGIE NUCLEAIRE