# ProtoDUNE DP

- **Detector elements**
- **Installation sequence**

**A. Gendotti ETHZ**

# Detector elements

# DETECTOR OVERVIEW

- 4x CRP Modules 3x3m²
- Field Cage (8x Modules)
- Cathode (4x Modules)
- GroundGrid (4x Modules)
- 36 x PMTs → 2 Layouts, both compatible with Internal Cryogenic and actual design of the Groundgrid

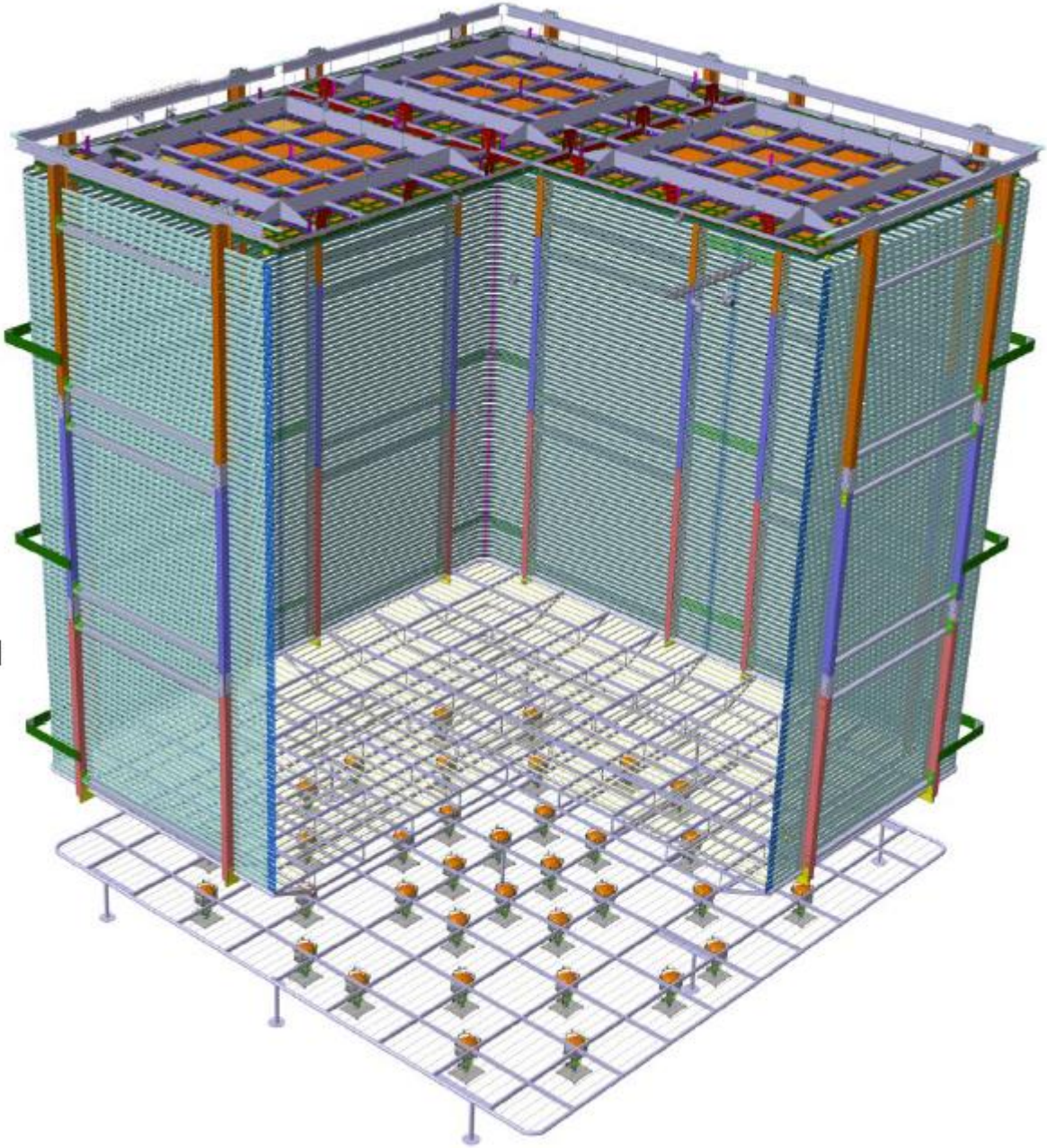

# DETECTOR OVERVIEW

- Top FTs
- Internal Cable Trays
- 4 x Purity Monitor
- Internal Cryogenic piping
- Beam Plug
- HVFT degrader

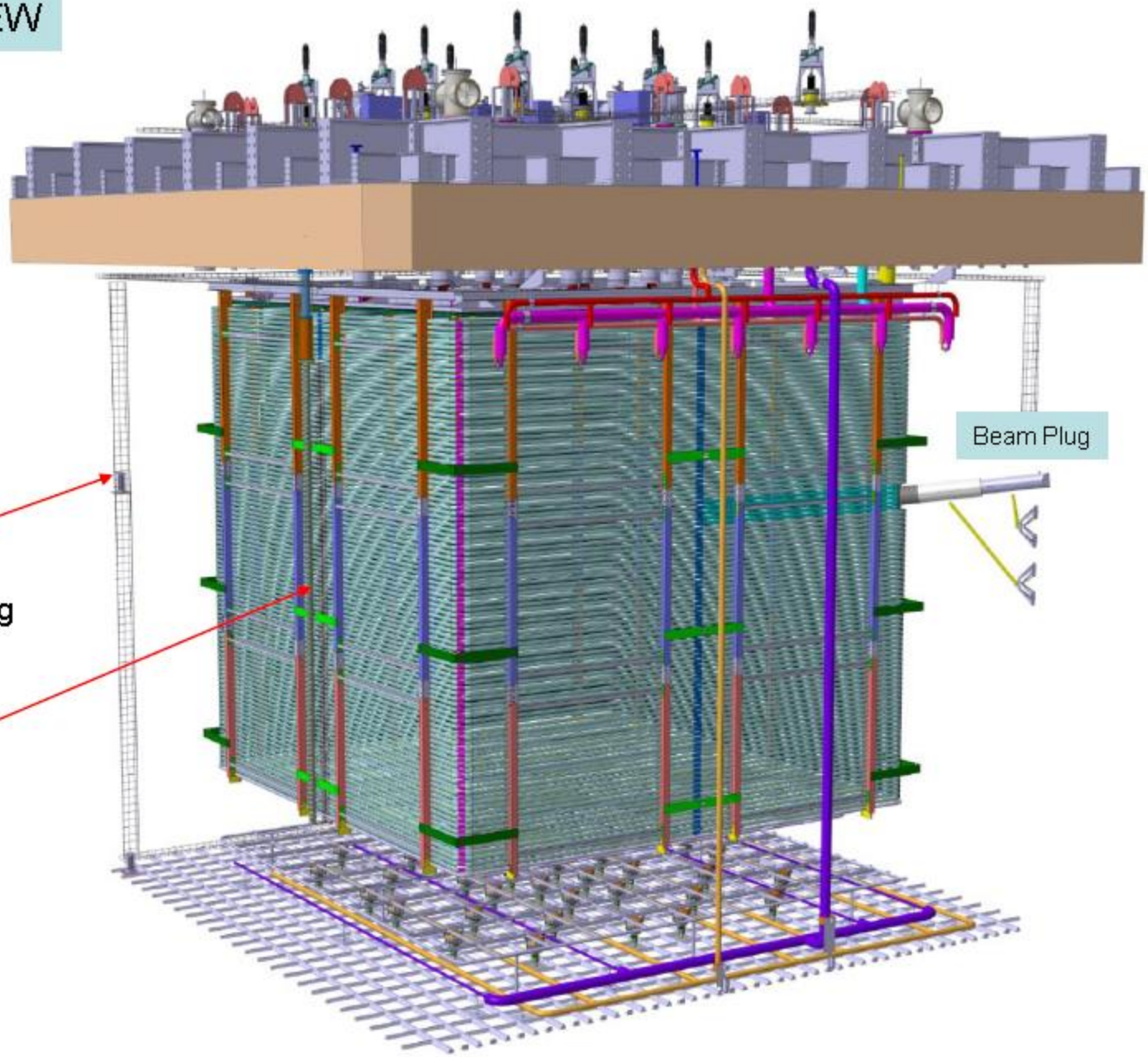

# DETECTOR OVERVIEW

- HV Degrader decoupled from the HVFT
- Hung at the HV Crossing Pipe
- Stainless Steel Rings connected to the Field Cage Alu rings

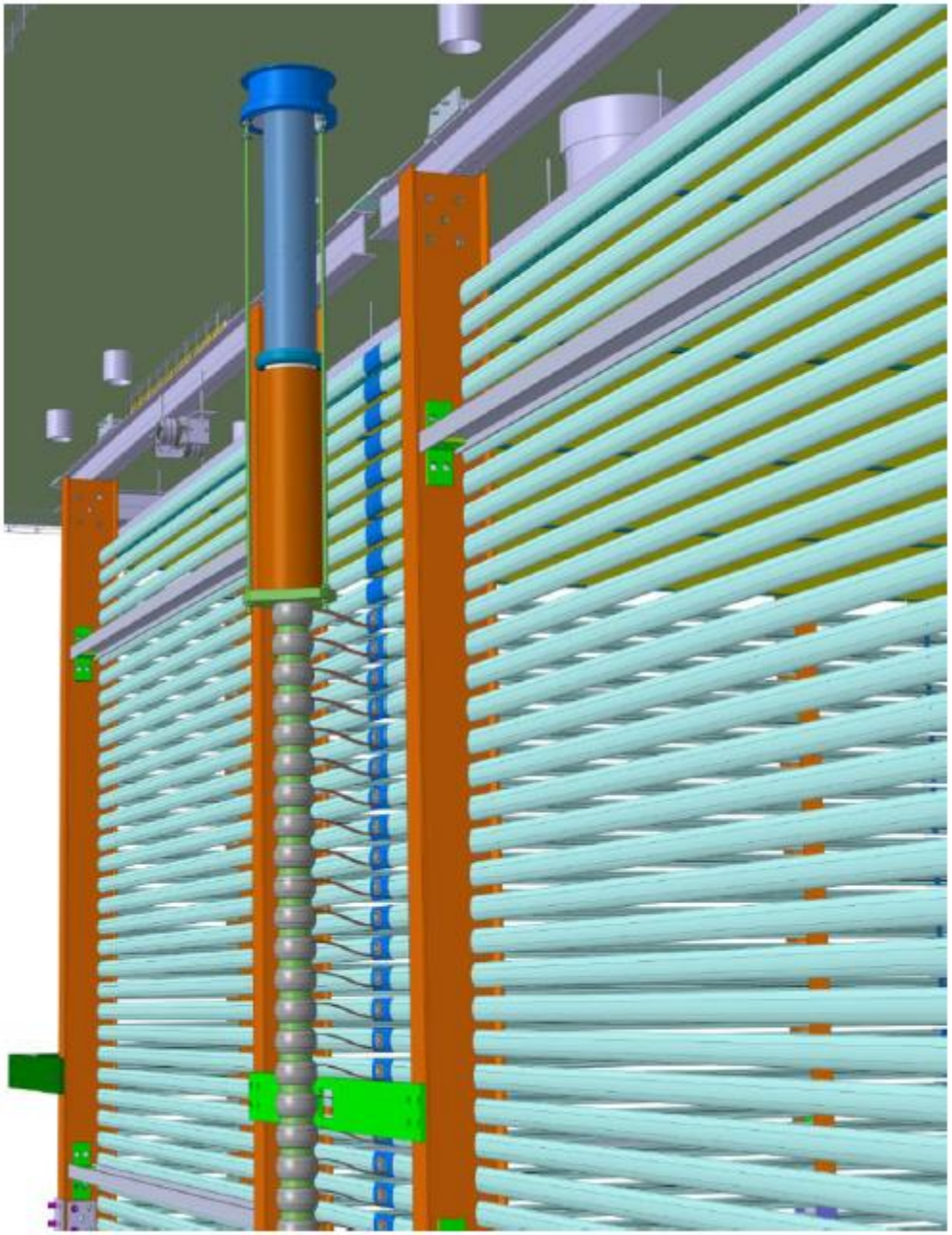

# DETECTOR OVERVIEW

Currently on 2 design for the Beam Plug (lenght ~1.7m)

- Single Phase Design
- Filled with Nitrogen Gas (~1 bar)
- 13 Field Rings
- Fixed at the Cryostat

- No Voltage Degrader
- Corrugated Insulator (avoid surface charging up) High Molecular Density PE
- Filled with Nitrogen (~1bar)
- Fixed at the Cryostat

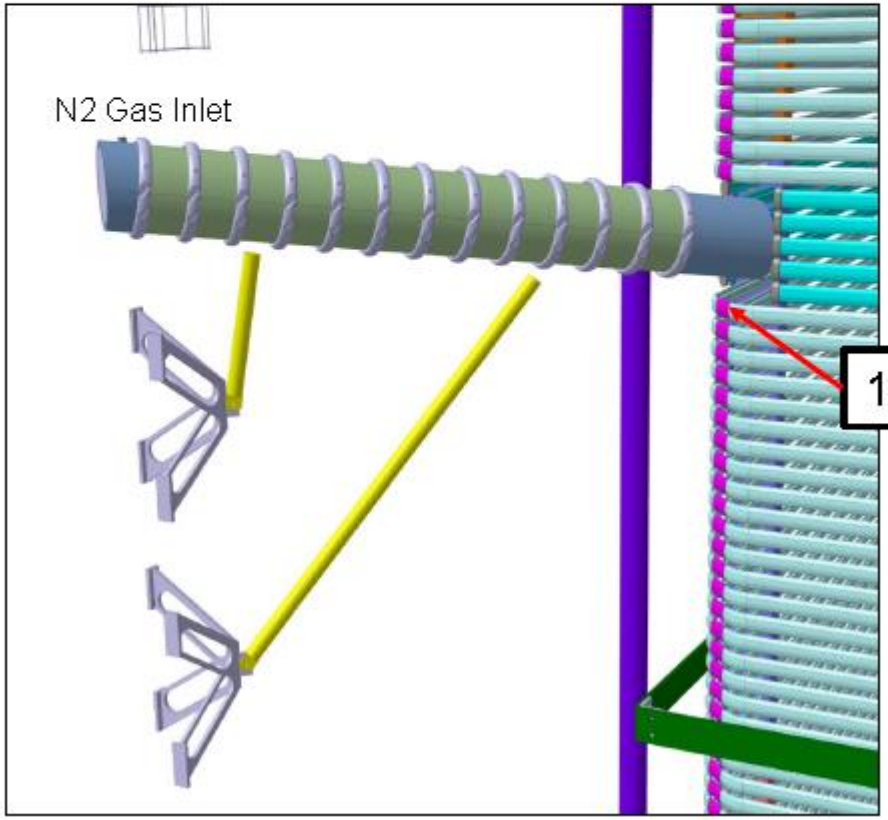


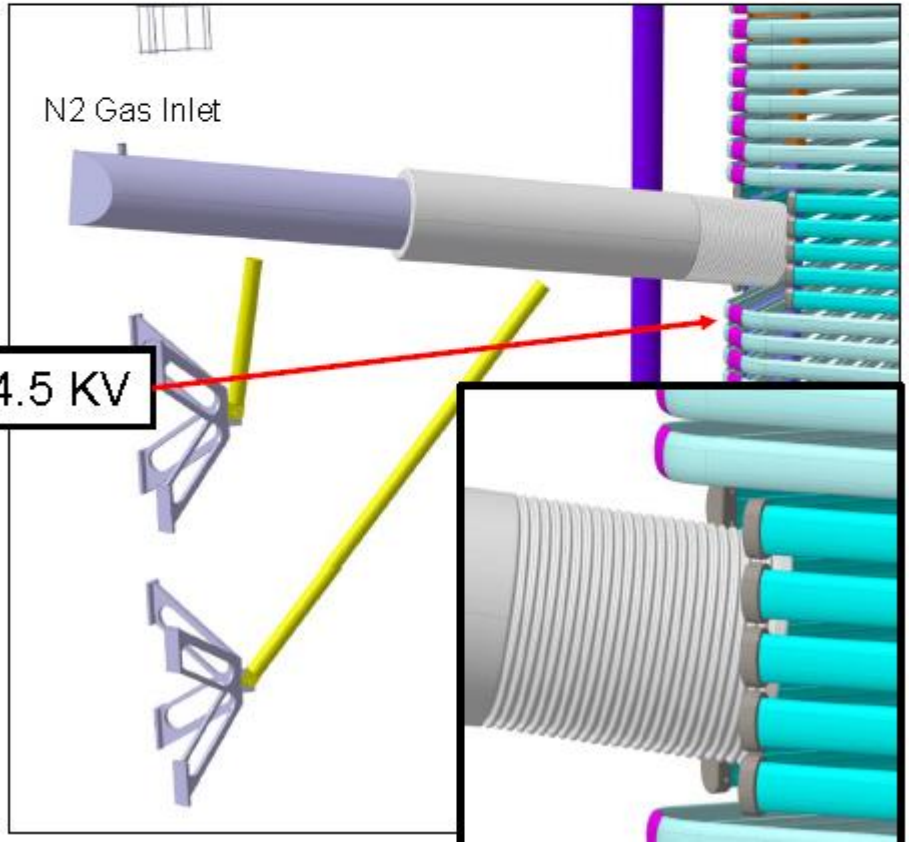

# TOP FTs at the Cryostat

- 12 x SGFT + µTCA
- 12 x SPFT CRP
- 16 x FC SPFT
- 4 x CRP-INS
- 2 x TANK-INS
- 1 x HVFT

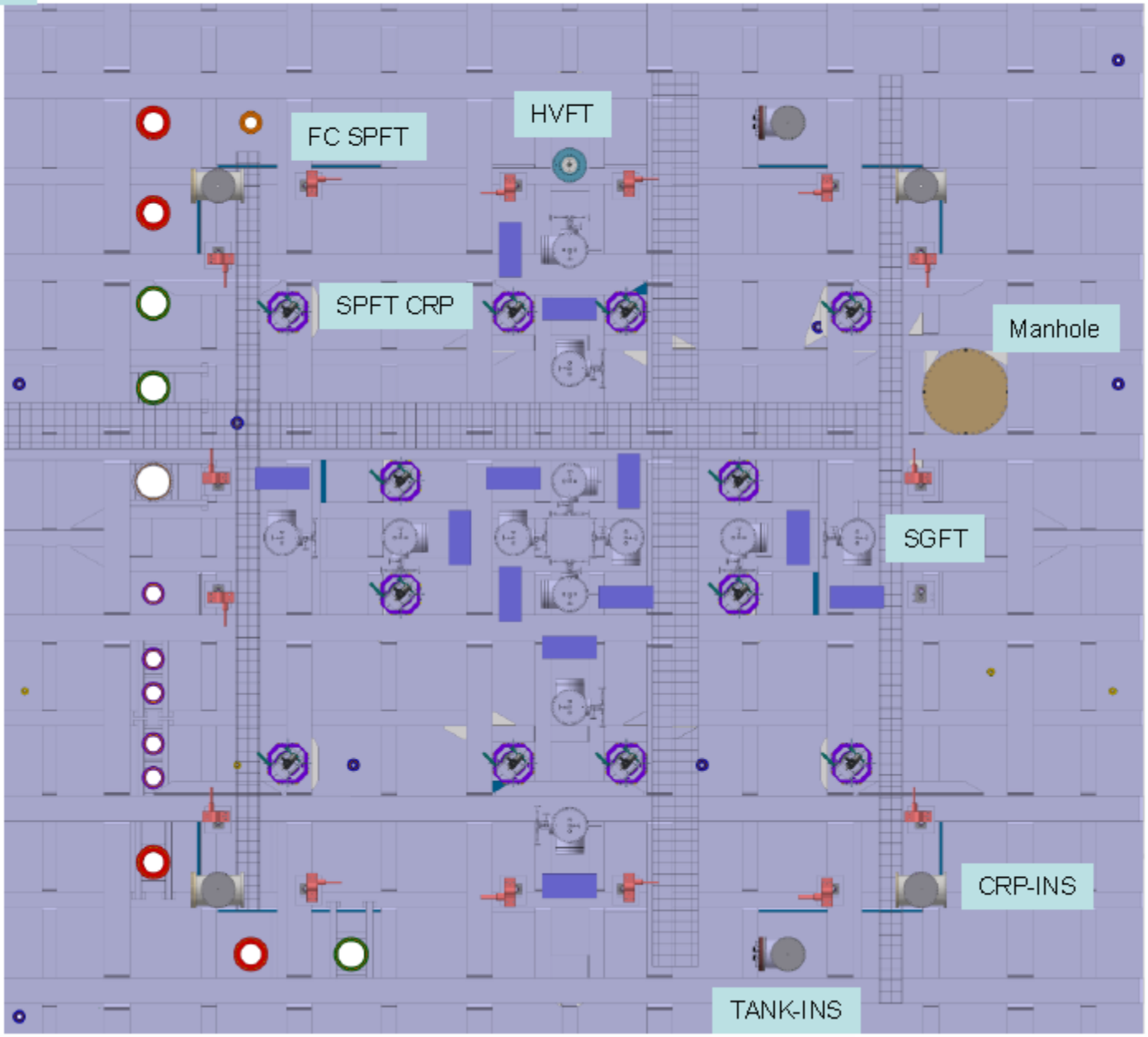

# TOP FEEDTHROUGH

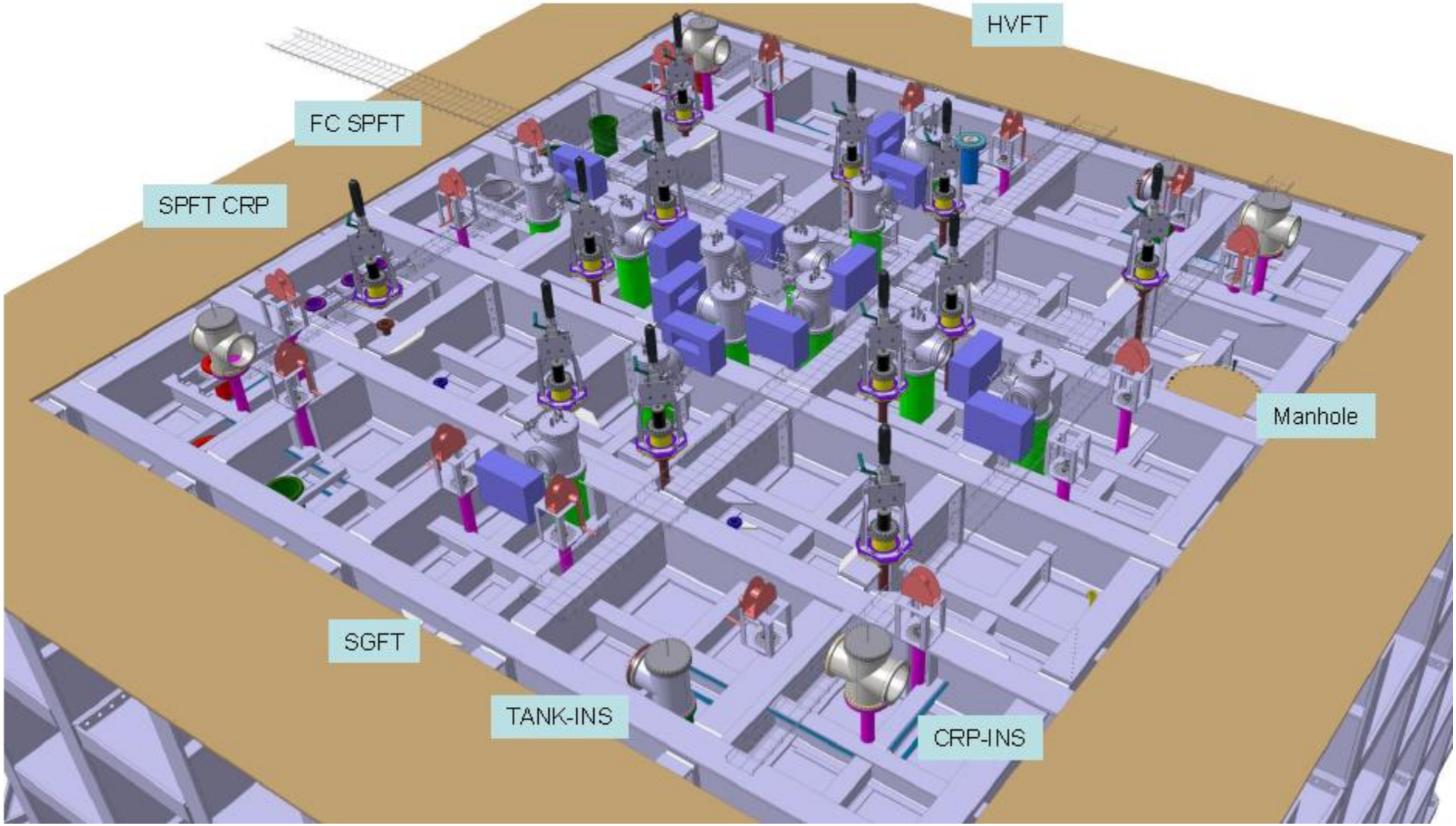

# TOP FEEDTHROUGH

## 12 x FC SPFT

- CF160 with 2 Small Chimney
- CF40 Field Cage Lifting
- CF16 Field Cage fixing

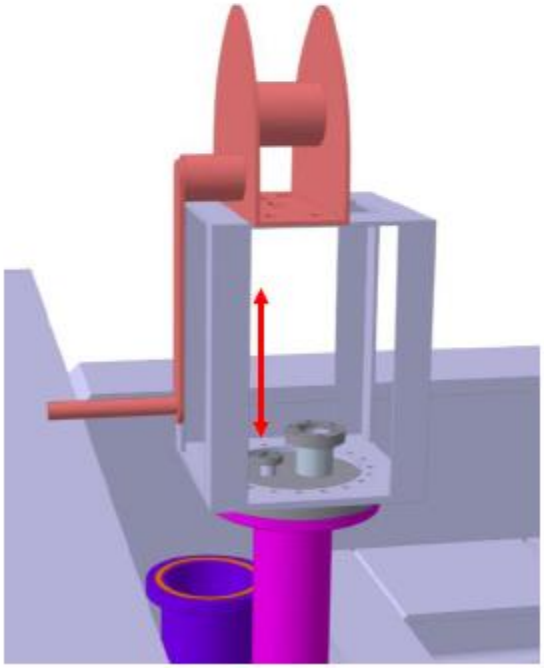

## 12 x SPFT CRP

- CF100 at the Crossing pipe
- Motor for vertical regulation
- X-Y Manual Regulation
- Manual Lifter for CRP Installation

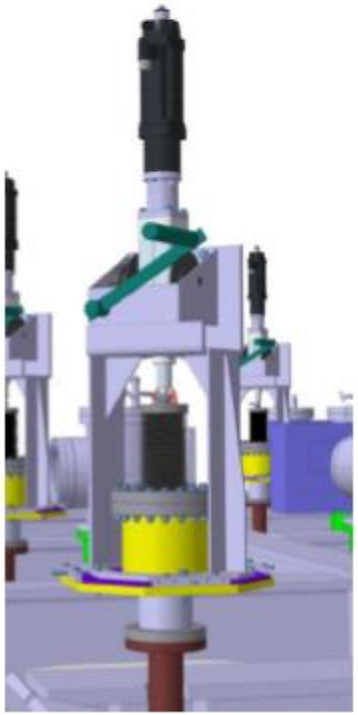

## 4 x CRP-INS

- CF250 Cross
- Flange with connectors not yet integrated

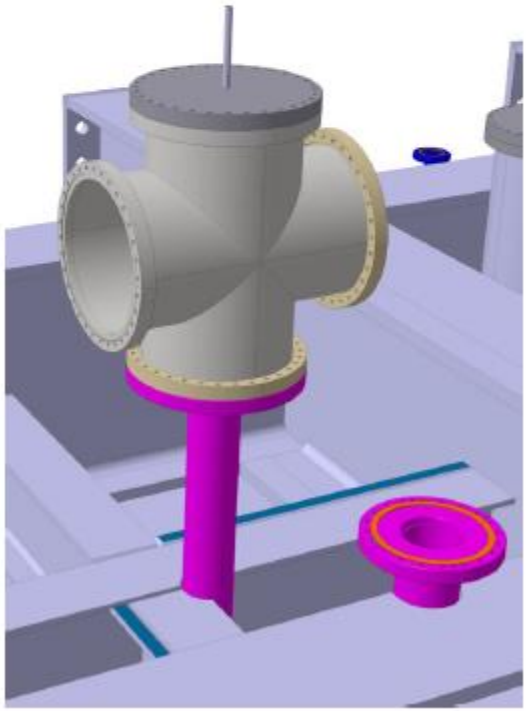

# TOP FEEDTHROUGH

## 2 x TANK-INS

- CF250 Tee
- CF250 with connectors

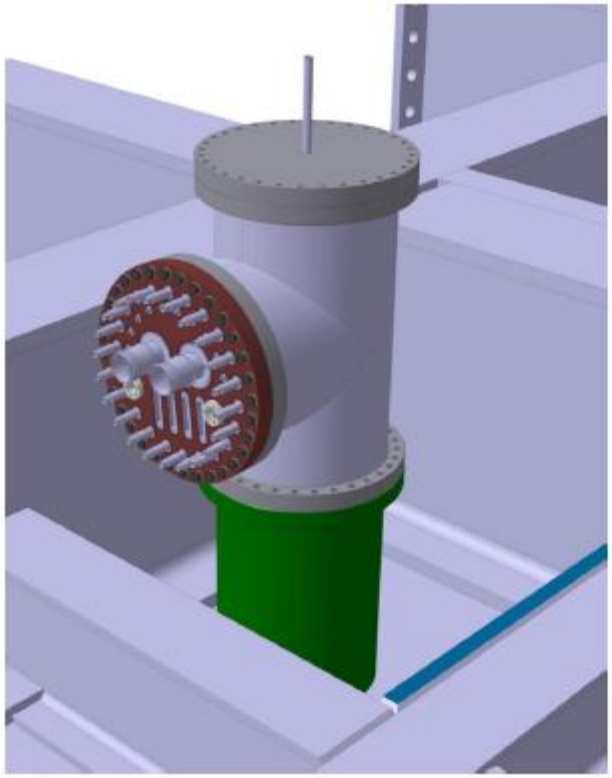

## 12 x SGFT

- CF250 Tee

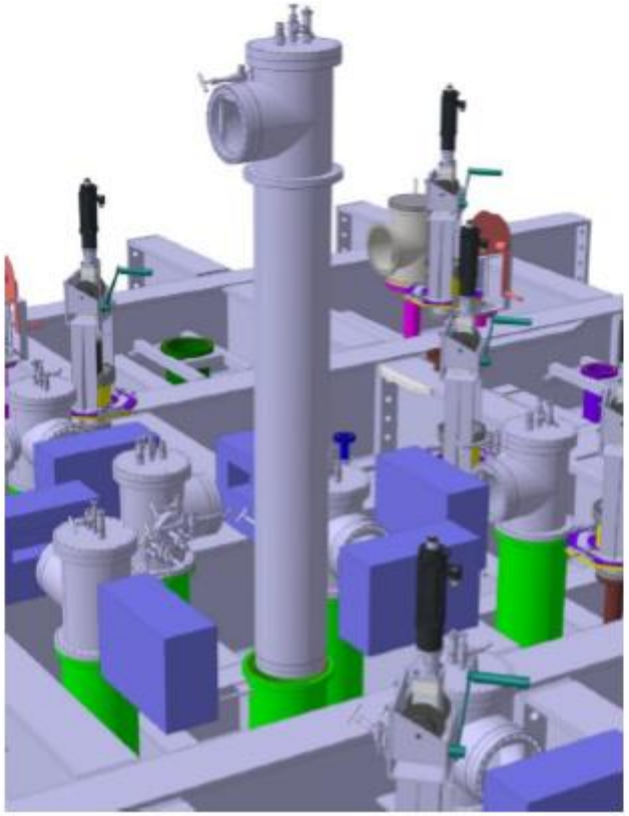

## 1 x HVFT

- CF250 at the Crossing Pipes

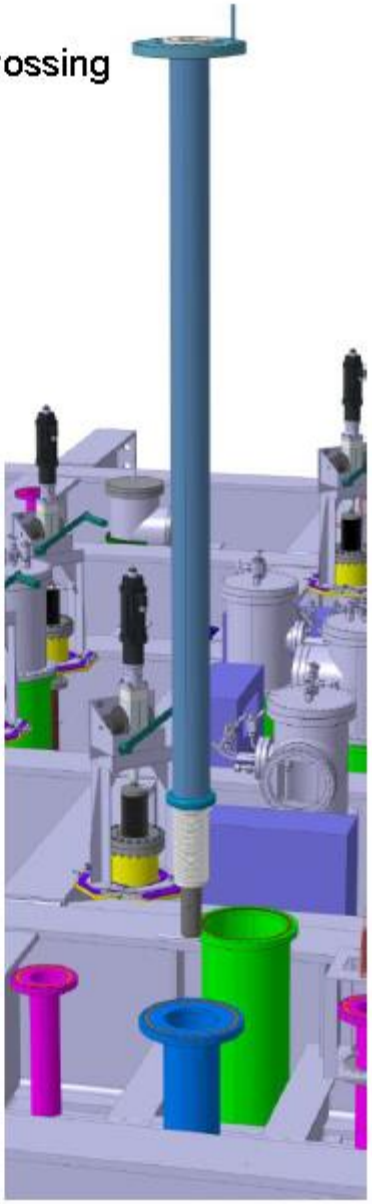

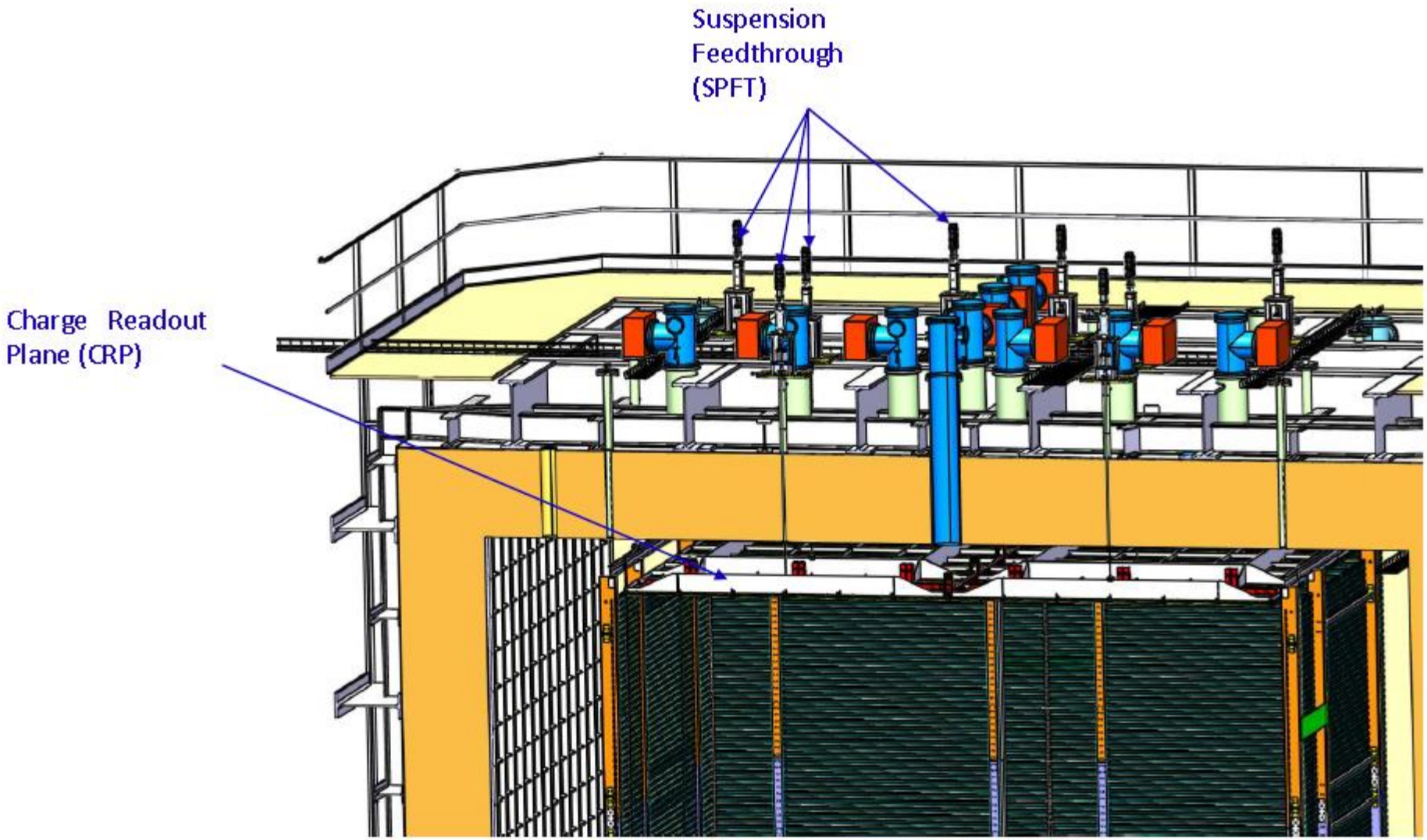
Suspension
Feedthrough
(SPFT)
Charge Readout
Plane (CRP)

## *Design & features – Overview*

- GAr volume completly closed
  - *no sliding parts,*
  - *no moving sealing*

- Movement absorbed by lateral deformation of the bellow

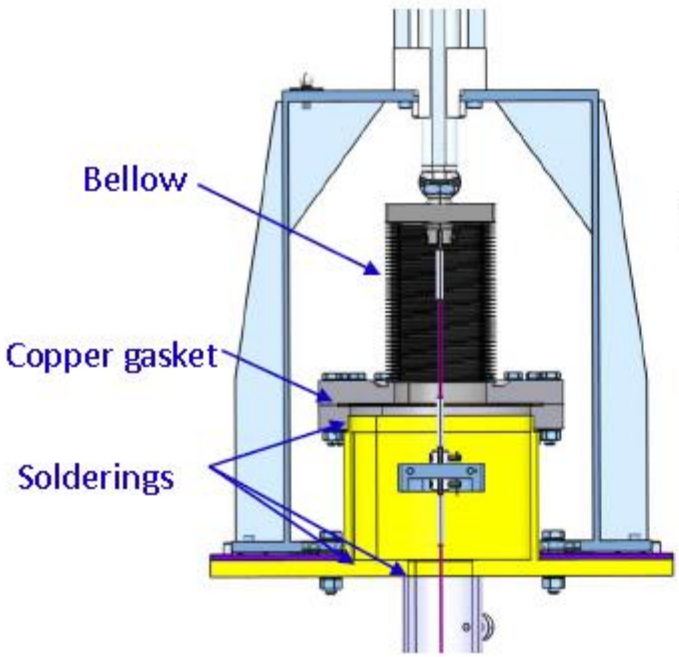


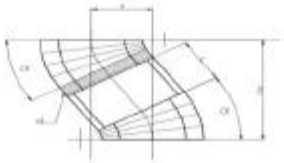

# *Design & Features – Vertical displacements*

- Vertical stroke : **98mm**
  - *Even with max lateral displacement*
- Lateral stroke : **+/- 26mm**
  - *Displacement in a circle Ø52mm*

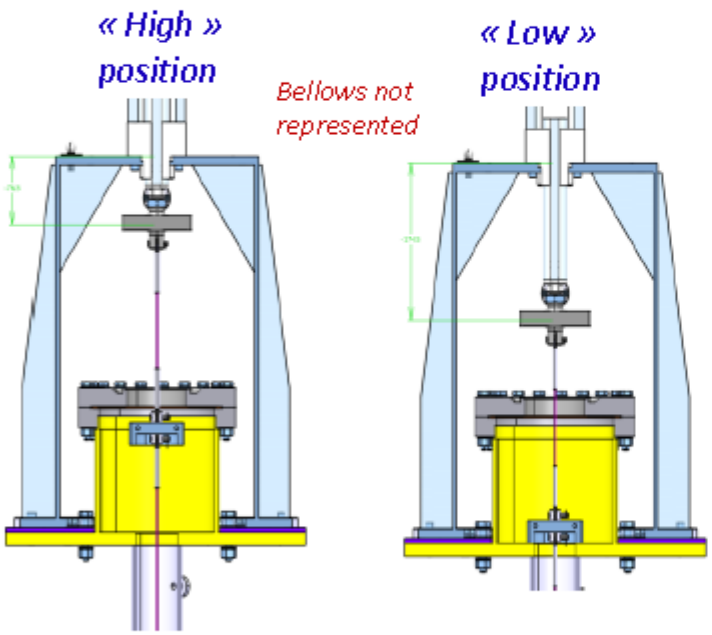


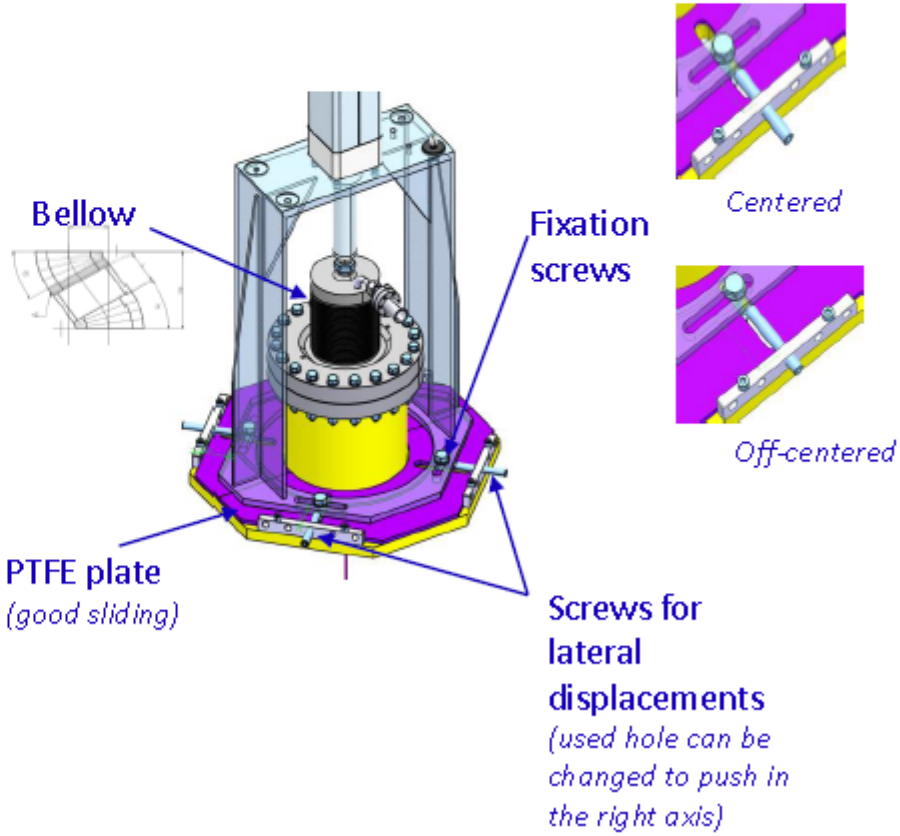

## Charge Readout Planes

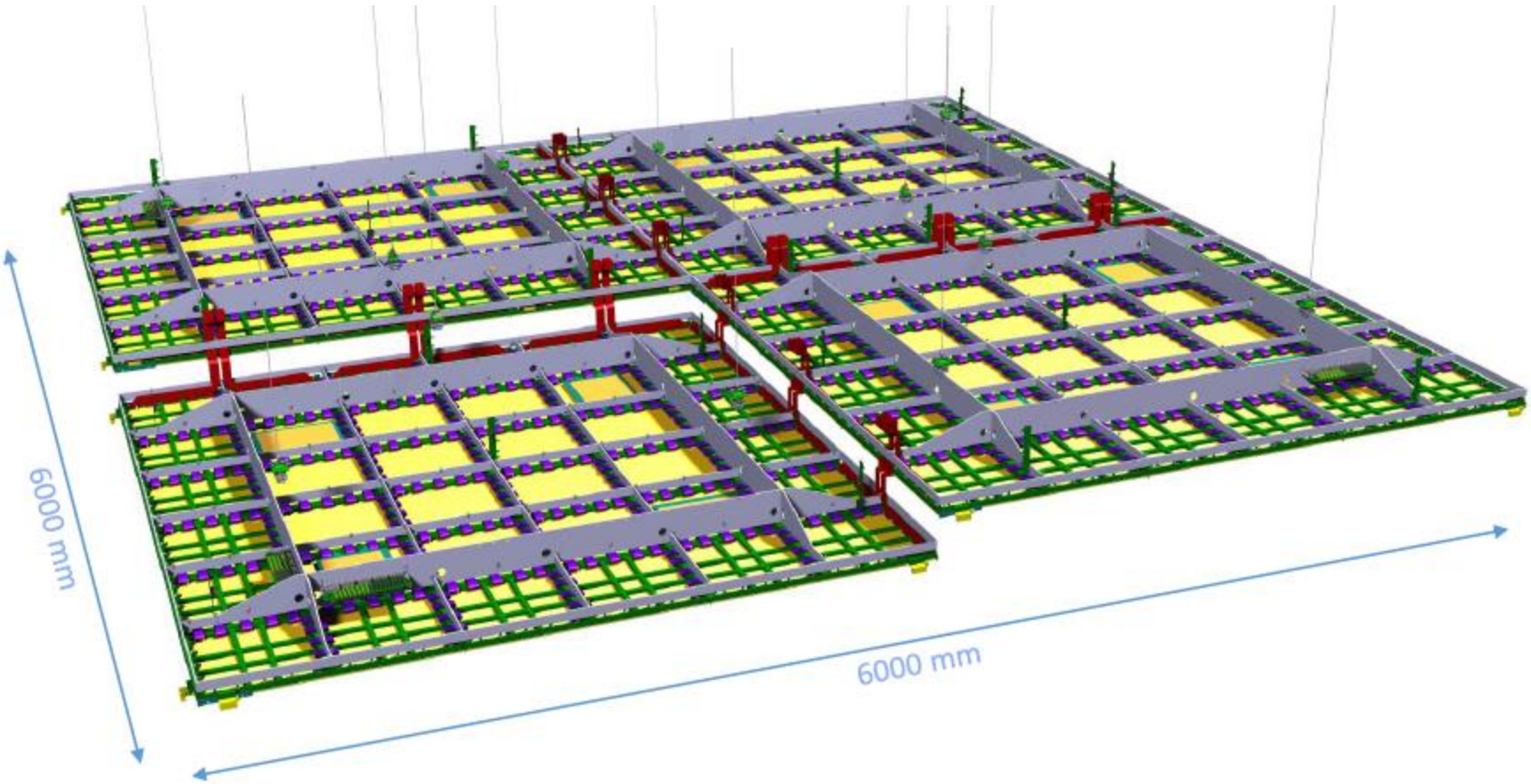

## *CRP Overview and composition*

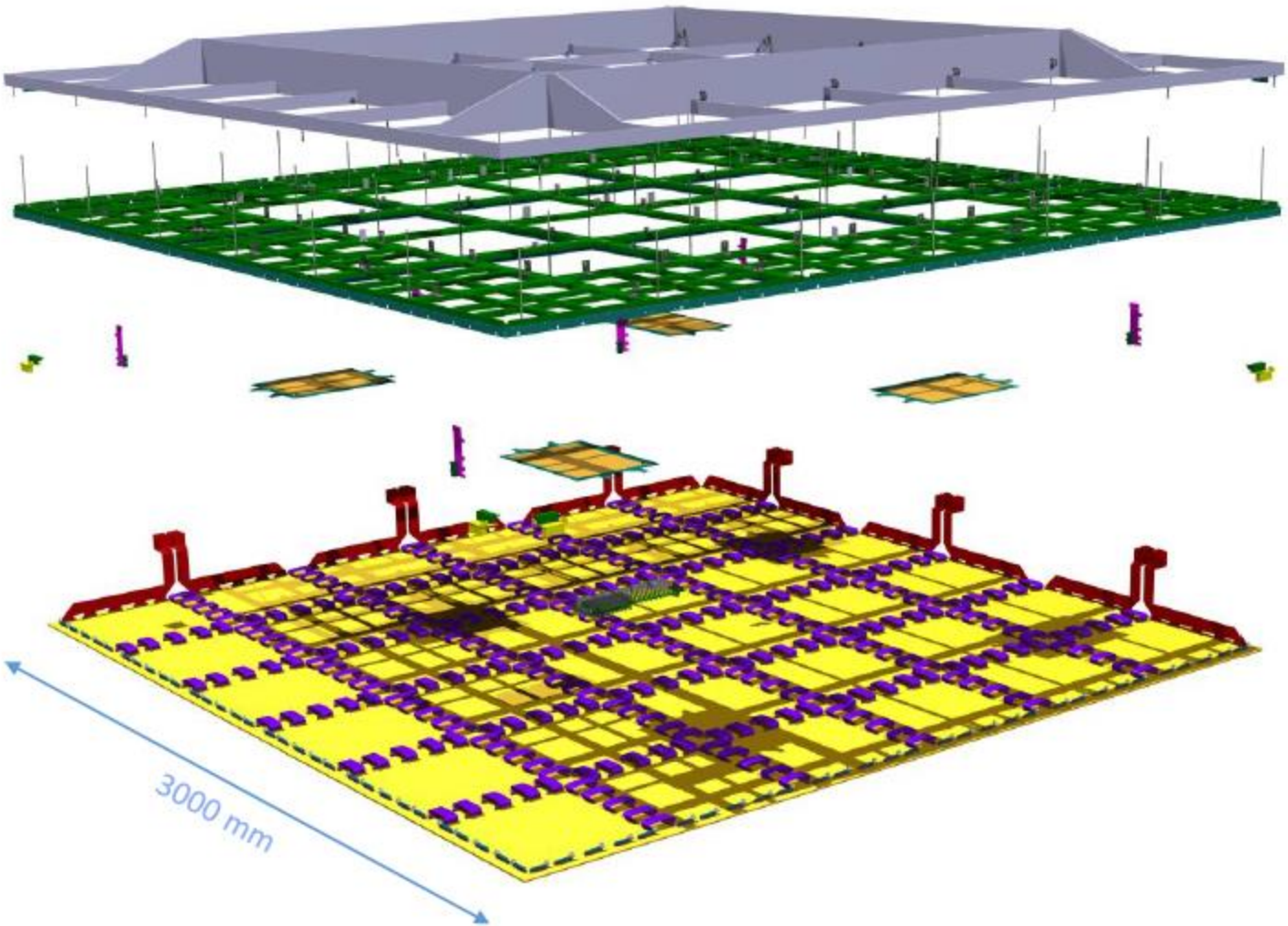


Invar Frame

G10 Frame +
Extraction Grid

Instrumentation

Detection plane

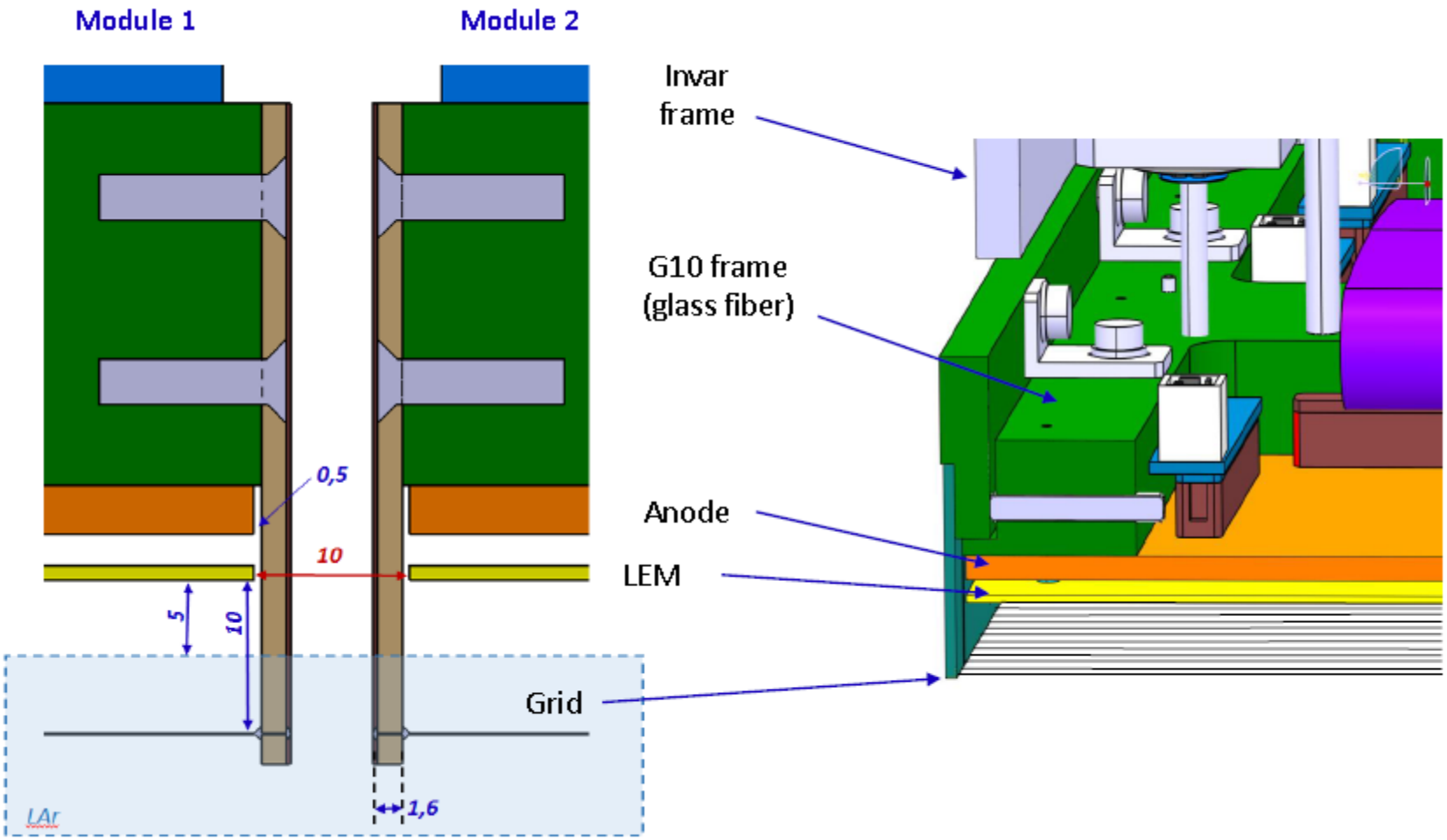
Module 1
Module 2
Invar frame
G10 frame (glass fiber)
Anode
LEM
Grid
0,5
10
5
10
1,6
LAr

# Invar Frame

- Invar frame is the skeleton of the module
- All the frames are identical

Stainless steel adaptable Cable fixations all around the frame

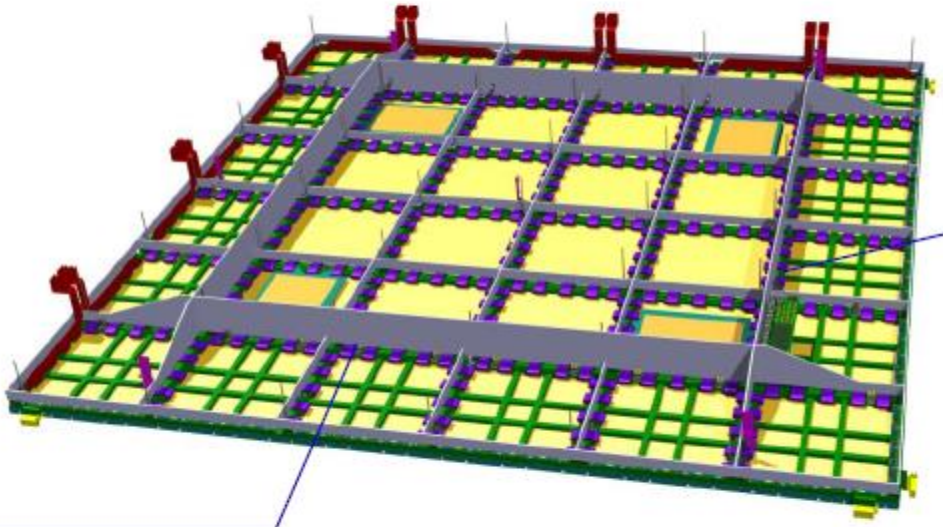

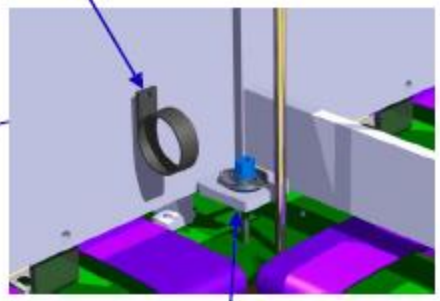

Supporting plates for thermal decoupling and planarity tuning welded on the frame

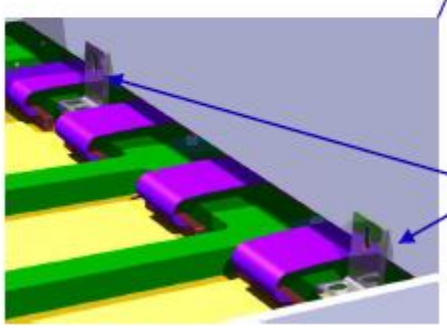

Square supports between invar and G10 for final assembly transportation

# G10 Frame

- 3x3m frame is an assembly of 1x1m frames
- Only 3 types of 1x1m frames

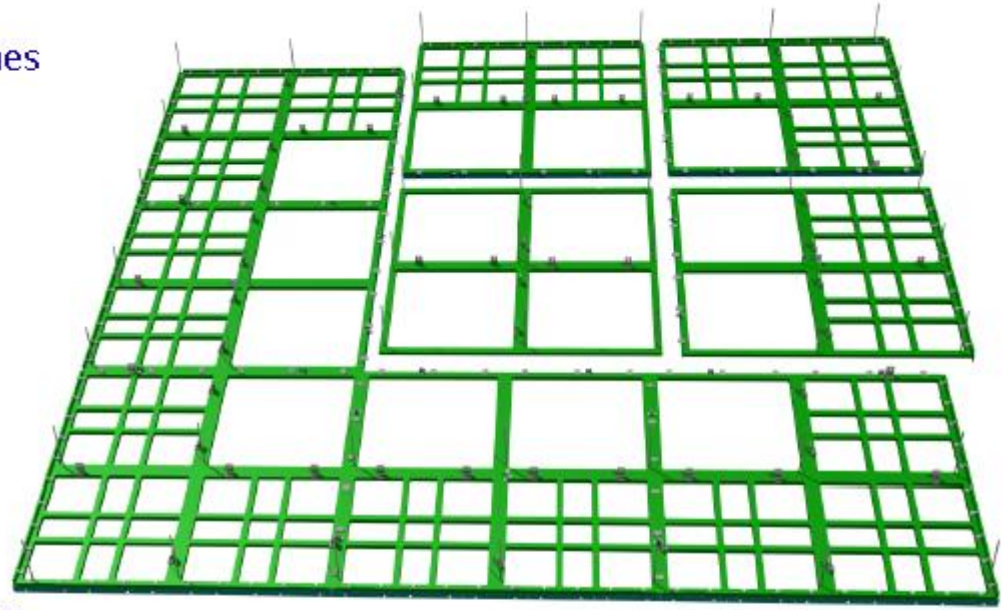

Junction between 1x1m frames :

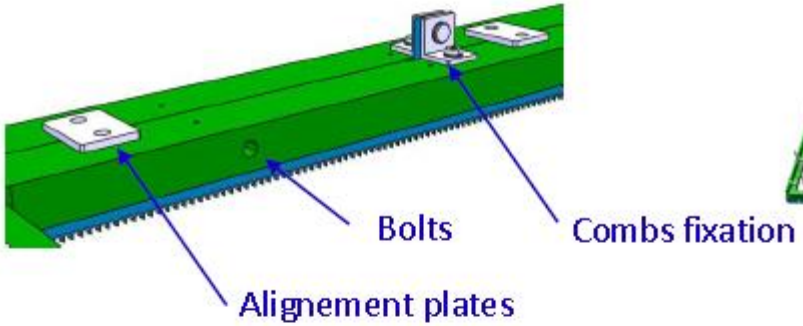


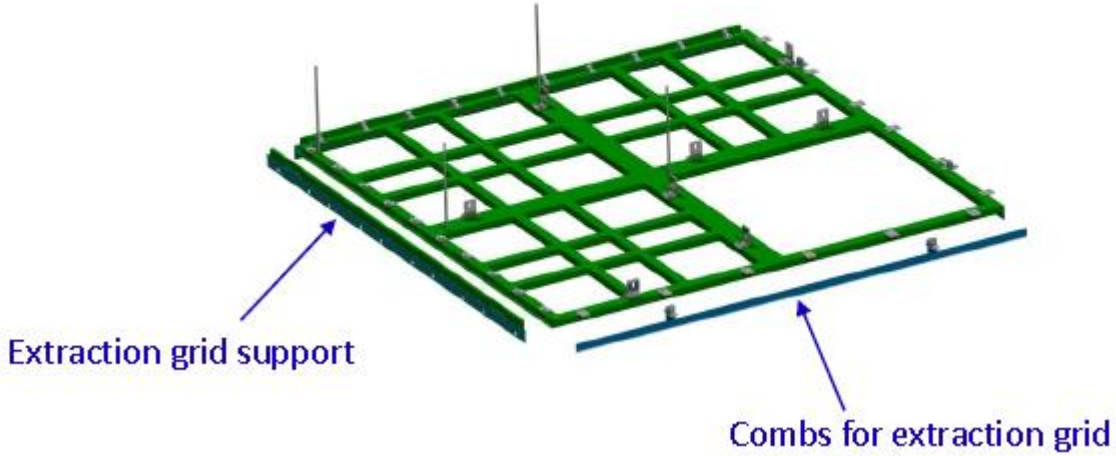

# *Thermal Decoupling*

- During cooling, Invar is keeping its dimensions while G10 frame and LEMs/Anodes are contracting
- Thermal decoupling allows a lateral sliding of the G10 frame, conserving the altitude
- Decoupling systems are installed at each corner of the invar frame (50 systems by 3x3m module)

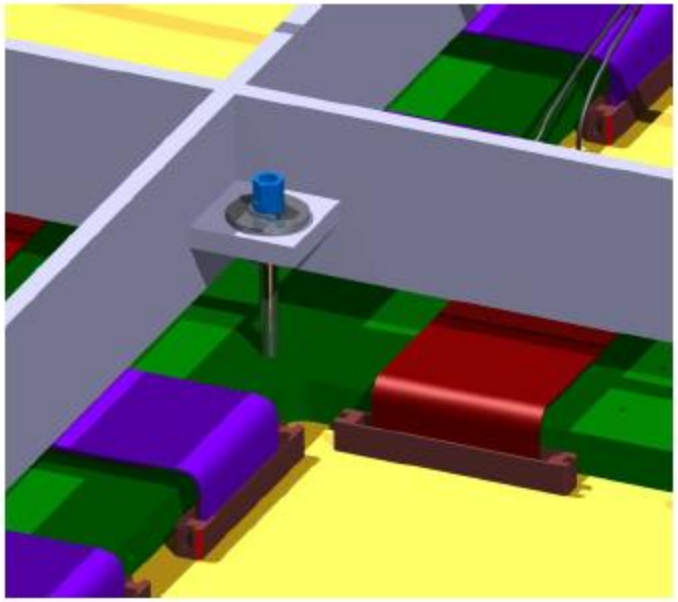

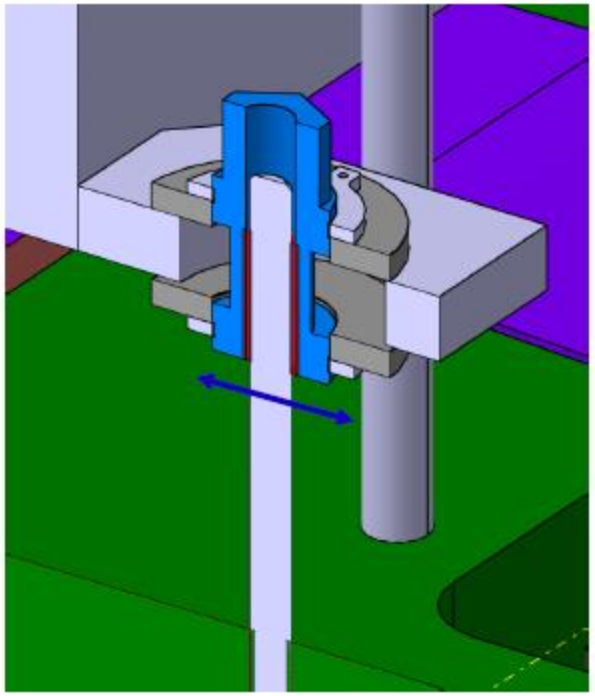

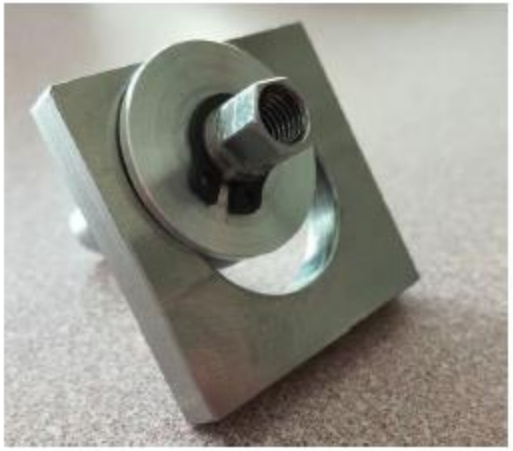

# *Assembly in Clean Room 185*

- See the animation of the assembly : https://youtu.be/jcnJjlU-Cyc

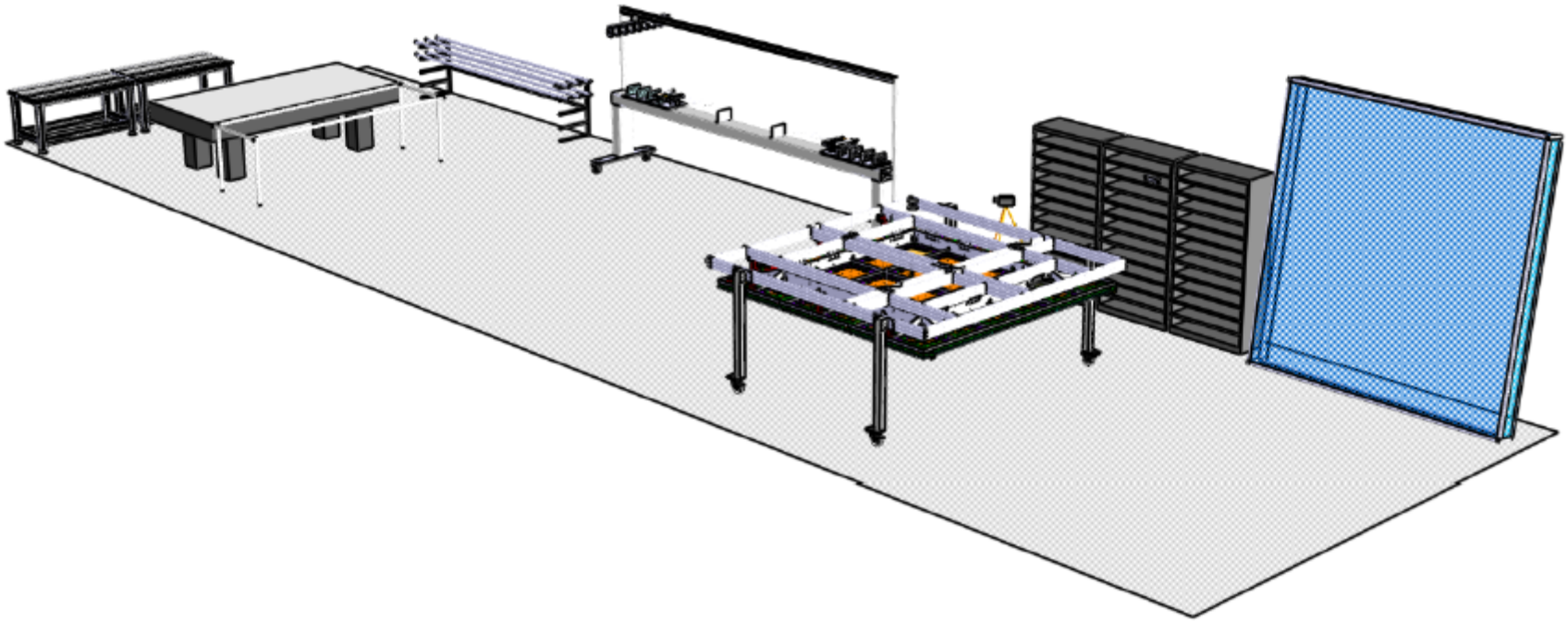

# Tooling for Grid production

- Initial metrology for PCB alignement
- Controled tension in the cables
- Zero defect soldering process validated

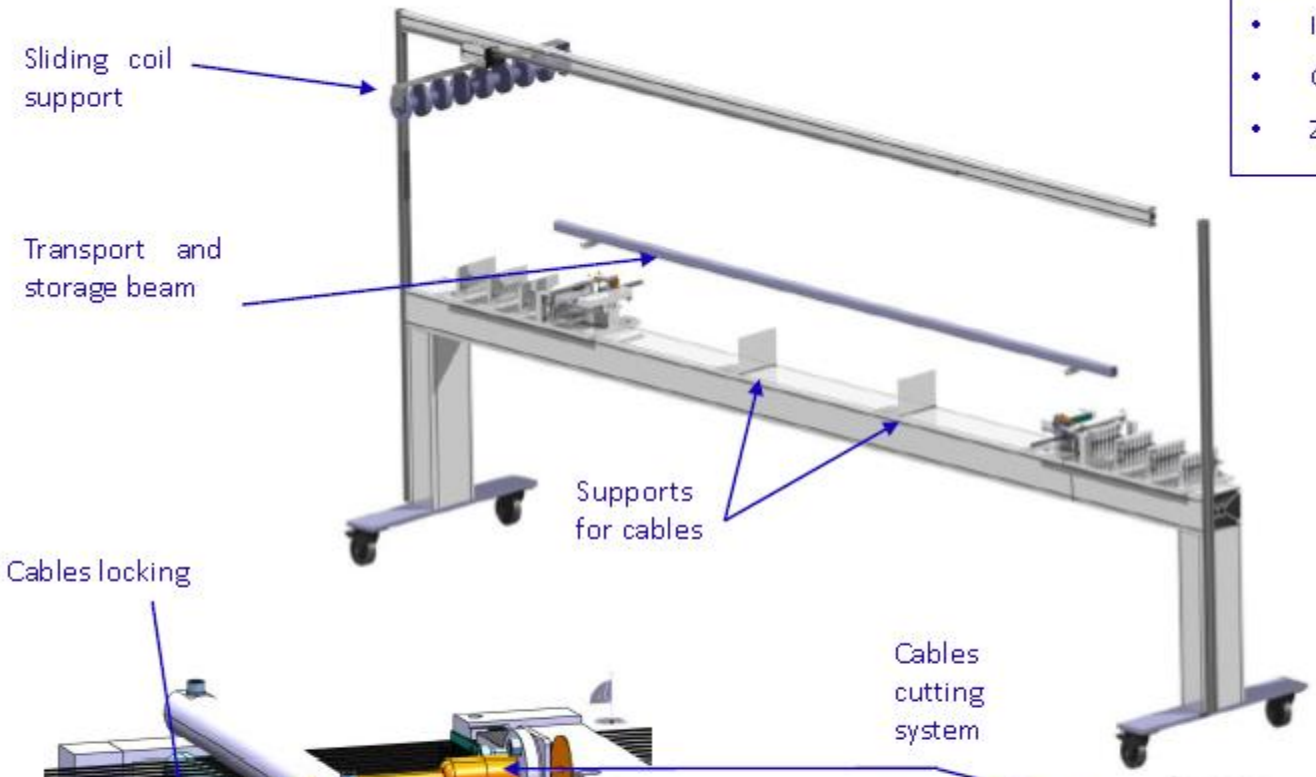


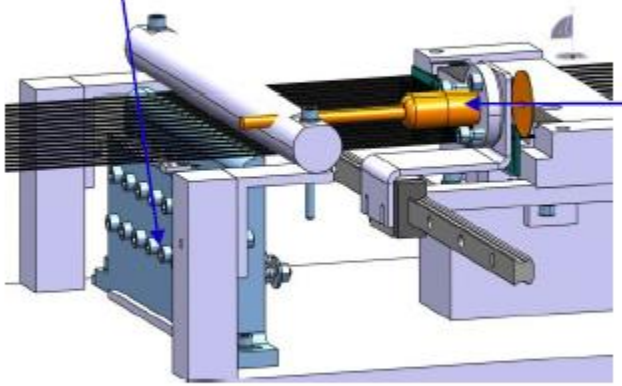


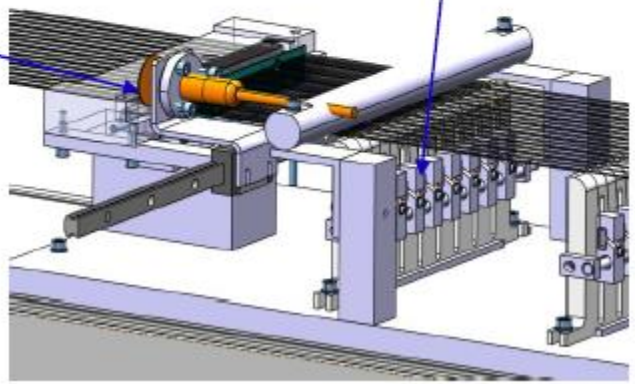

# FIELD CAGE

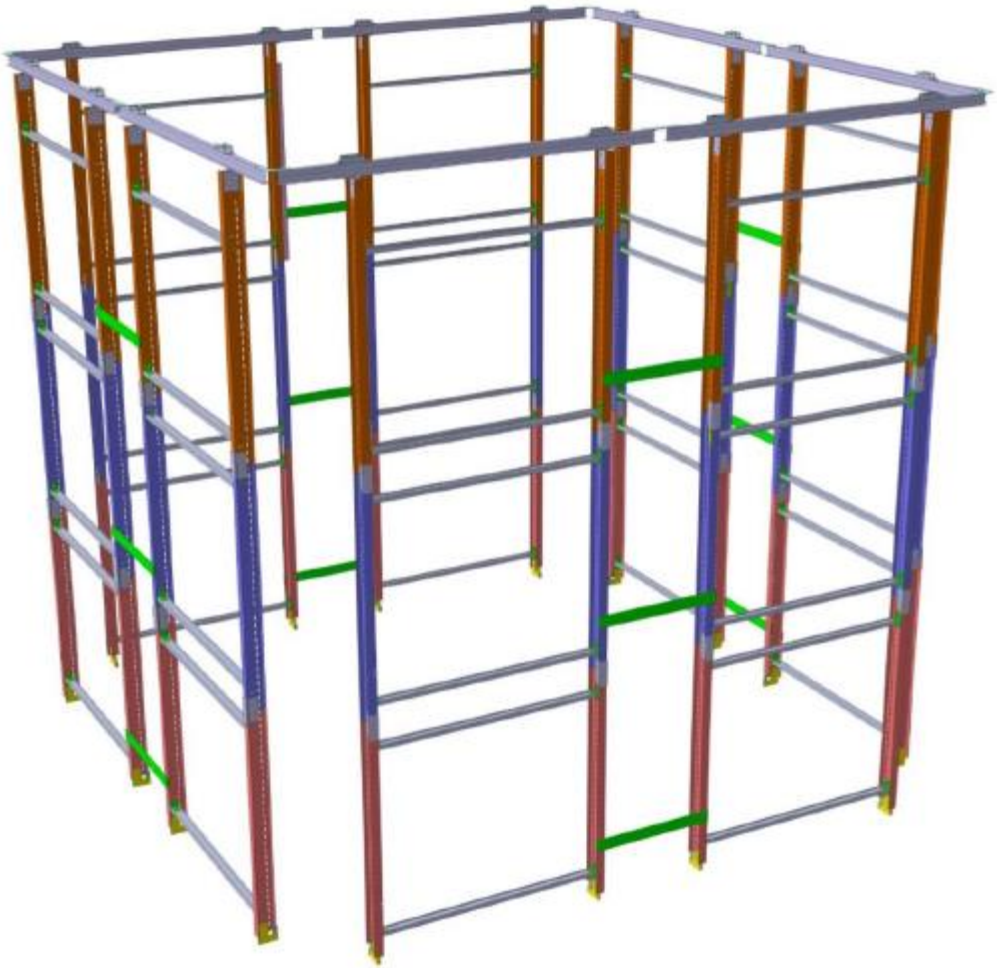

- FRP skeleton consists in 8 identical modules
- Each modules has 3 sub-modules
- Hanging system is Stainless Steel

6-inch Main I-Beam

Horizontal Reinforcement 3 inch I-Beam

# FIELD CAGE

SS Hanging System

- HV divider Column

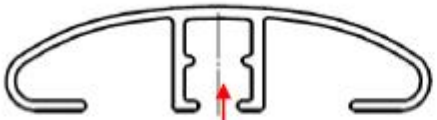

- M4 Nuts inserted in the profile
- Alu Profiles fixed at corner side with M4 screws (reduce shrinking)

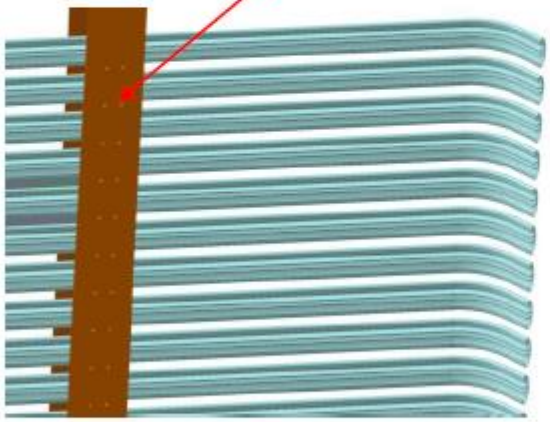

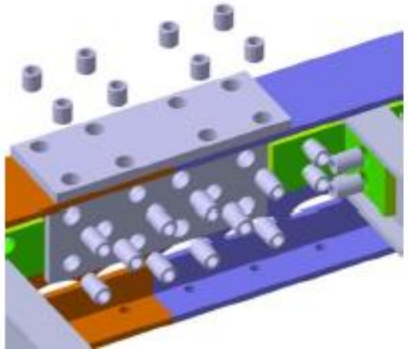

All connections:

- G10 inserts
- FRP Rod and Nuts

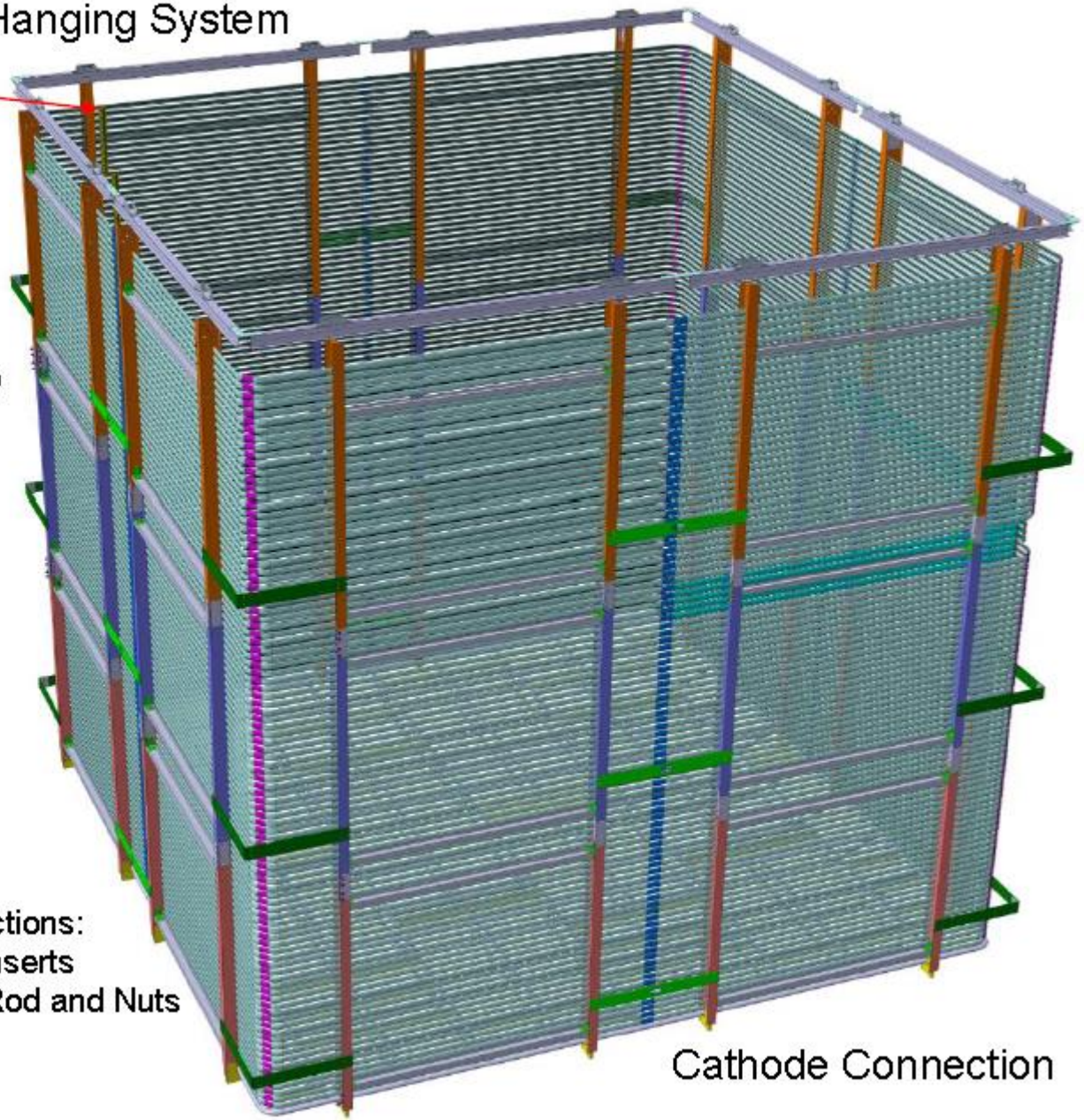

Cathode Connection

# FIELD CAGE

3010mm

SS Hanging System

6310mm

98 ALU Profile (One end bended 45 deg)

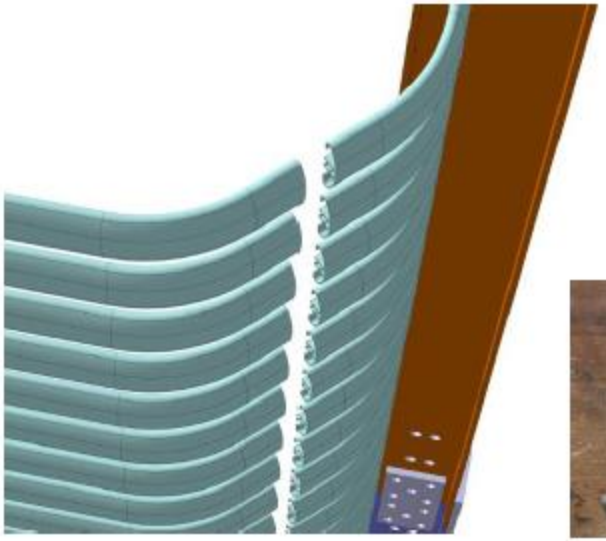

Cathode Connection

# FIELD CAGE

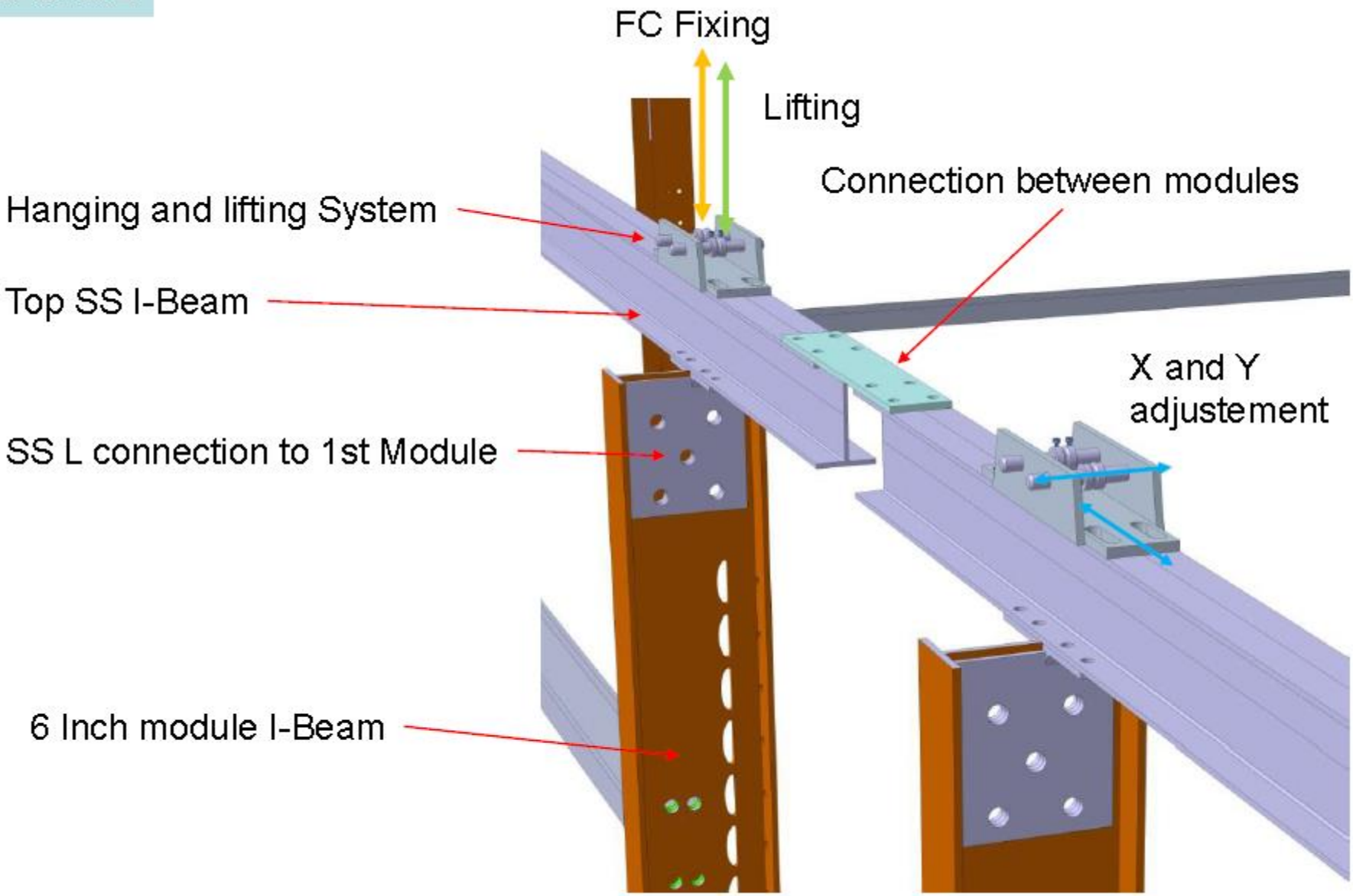
FC Fixing
Lifting
Connection between modules
Hanging and lifting System
Top SS I-Beam
X and Y
adjustement
SS L connection to 1st Module
6 Inch module I-Beam

# FIELD CAGE

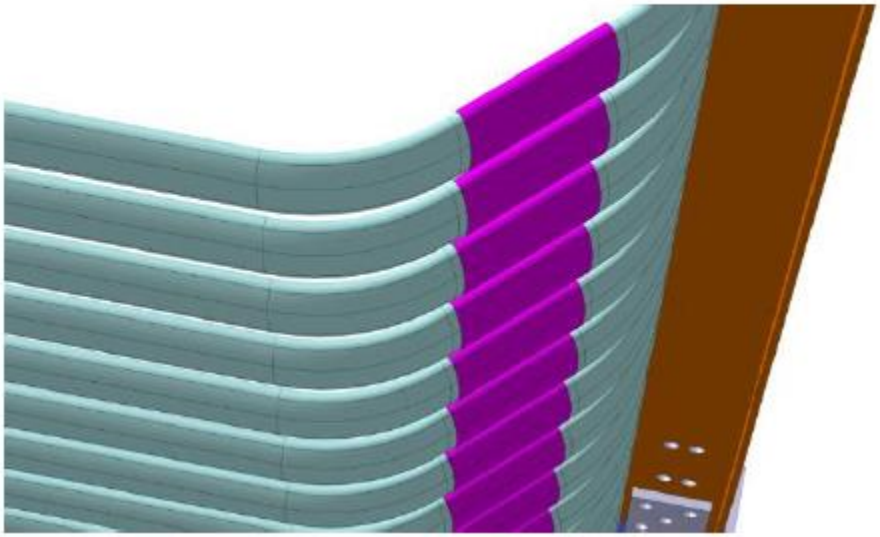

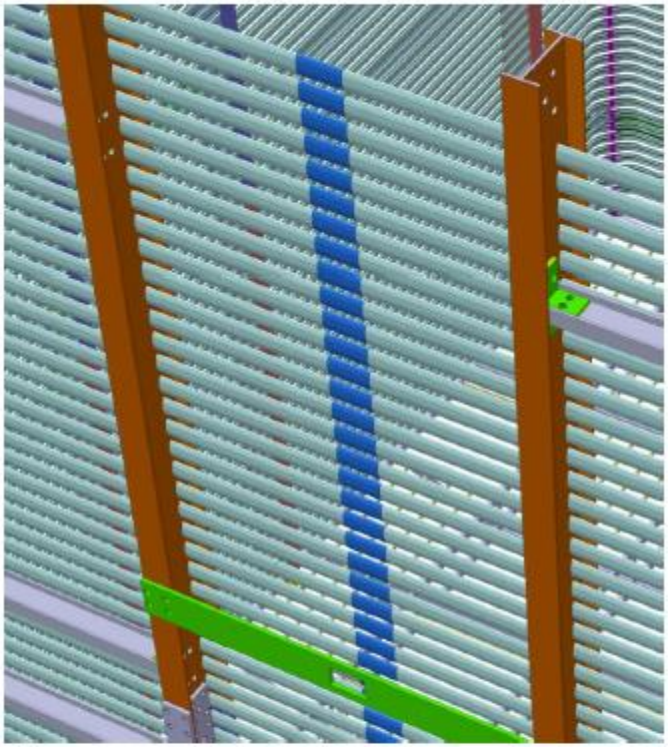

All the clips are straights

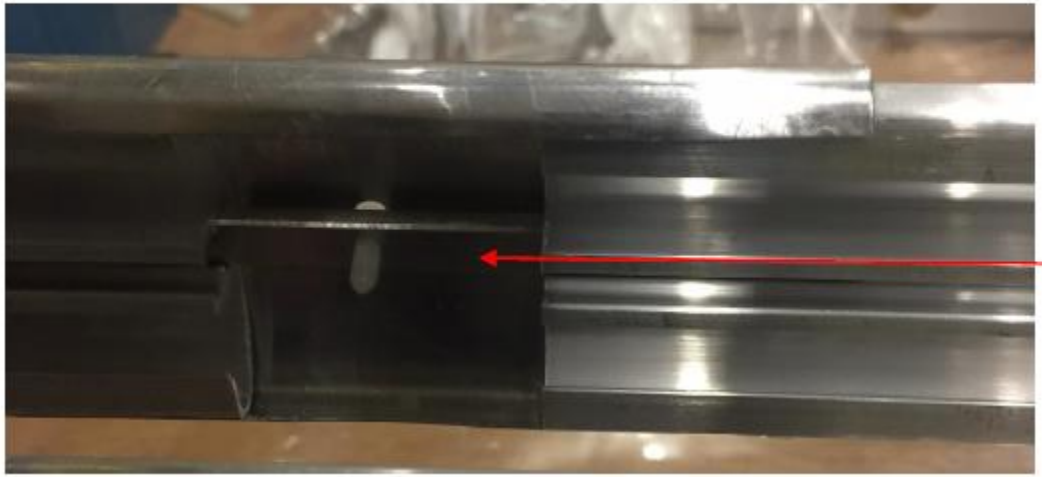

Centered with a bar in the profile and the clip is fixed to the bar with a screw → mechanical and electrical connection ensured.

# FIELD CAGE

- PCB Board HV divider connect 11 profiles
- Connection overlapp each PCB board
- Connected with M4 Screw and Nut to the Alu Profile (same fastening system at the FRP I-Beam)

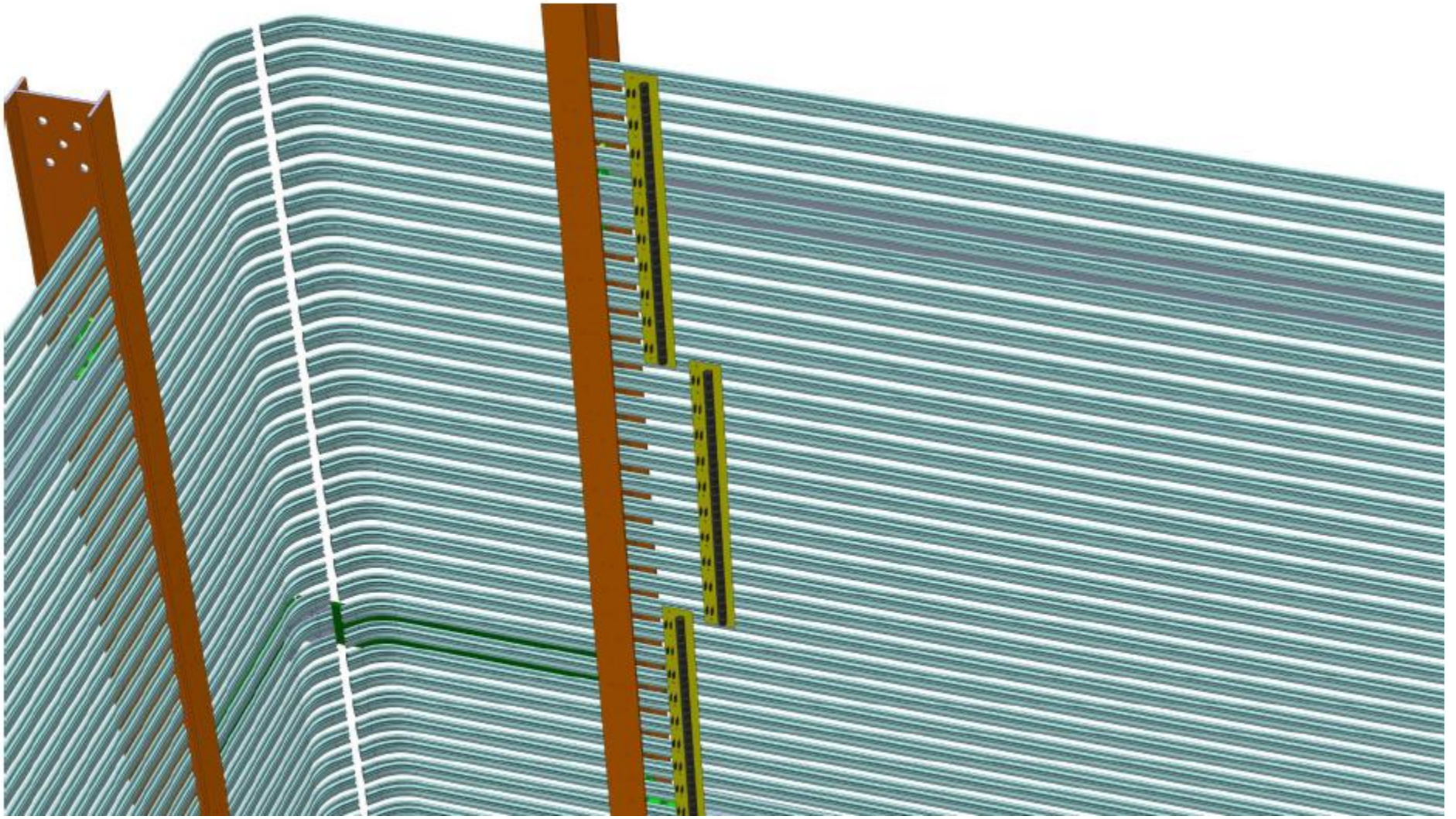

# CATHODE

- 4 identical Modules bolted together
- 20 mm dia SS pipes with 105mm pitch
- Crossed pipes orientation
- Material: Stainless Steel
- External Round pipe Dia 40mm
- Internal rectangular Pipe 20x40x2 with round edges

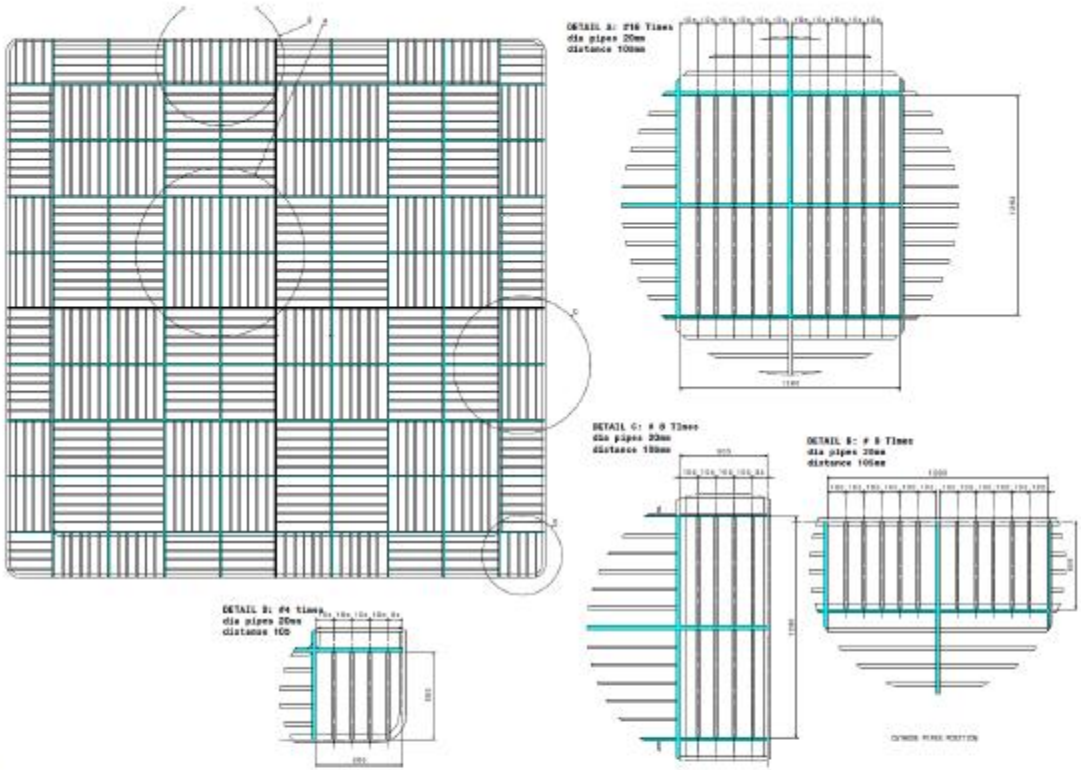

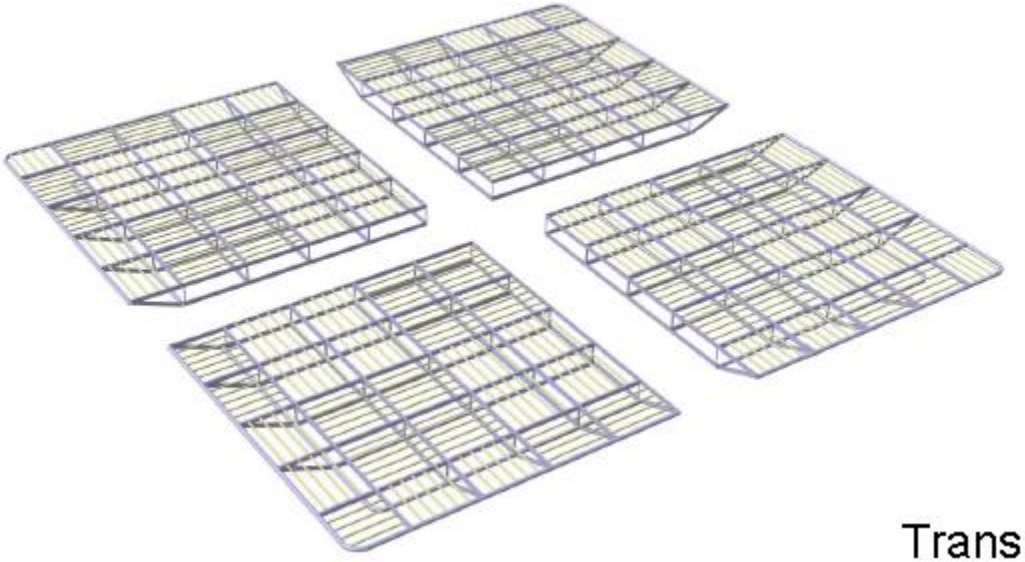

Transportation BOX Size: 3.2m x 3.2m x 0.5m

## GROUNDGRID

- 4 identical Modules bolted together
- 6m long SS wires
- Material: Stainless Steel
- External Round pipe Dia 40mm
- Internal rectangular Pipe 20x40x2 with round edges
- 9 feet placed on the flat part of the Membrane

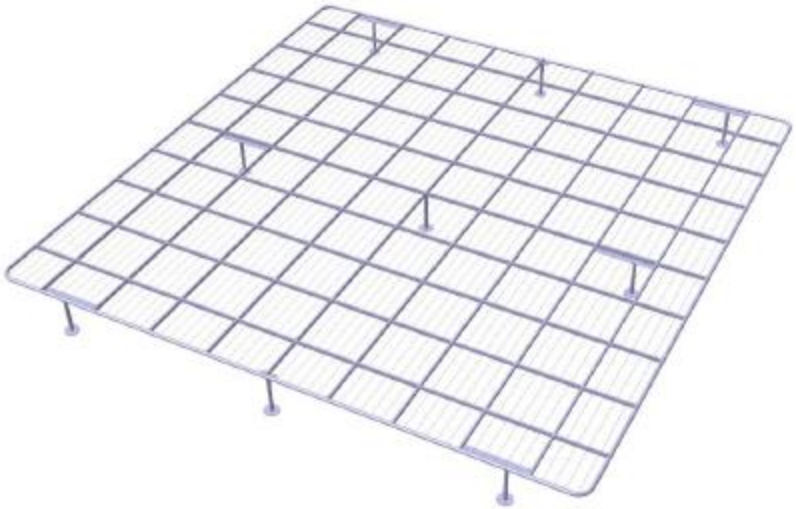

Transportation BOX Size: 3.2m x 3.2m x 0.2m

## PMTs

- PMT fixed on a stainless steel plate placed on the center of the flat membrane through 4 feet
- Currently 2 Layout for the PMTs

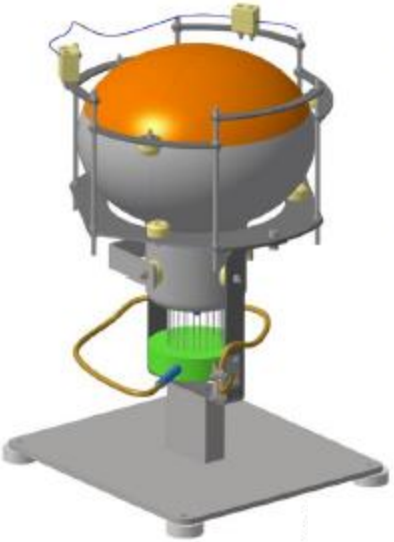

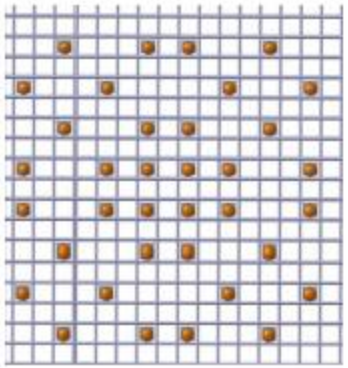

INSTALLATION SEQUENCE:

0. Internal Cryogenic pipes, Temporary Construction Floor and CRB
1. FTs Installation
2. CRP- 3X3 $m^2$ | (LAPP talk - *CRP: plans for assembly and installation*)
3. Field Cage Installation
4. Cathode and Groundgrid
5. Removal of Temporary Construction Floor
6. PMTs and Groundgrid
7. Closure of theTCO

## 0) Internal Cryogenic Pipes

- Internal Cryogenic Pipes will be installed before the Temporary Construction Floor.

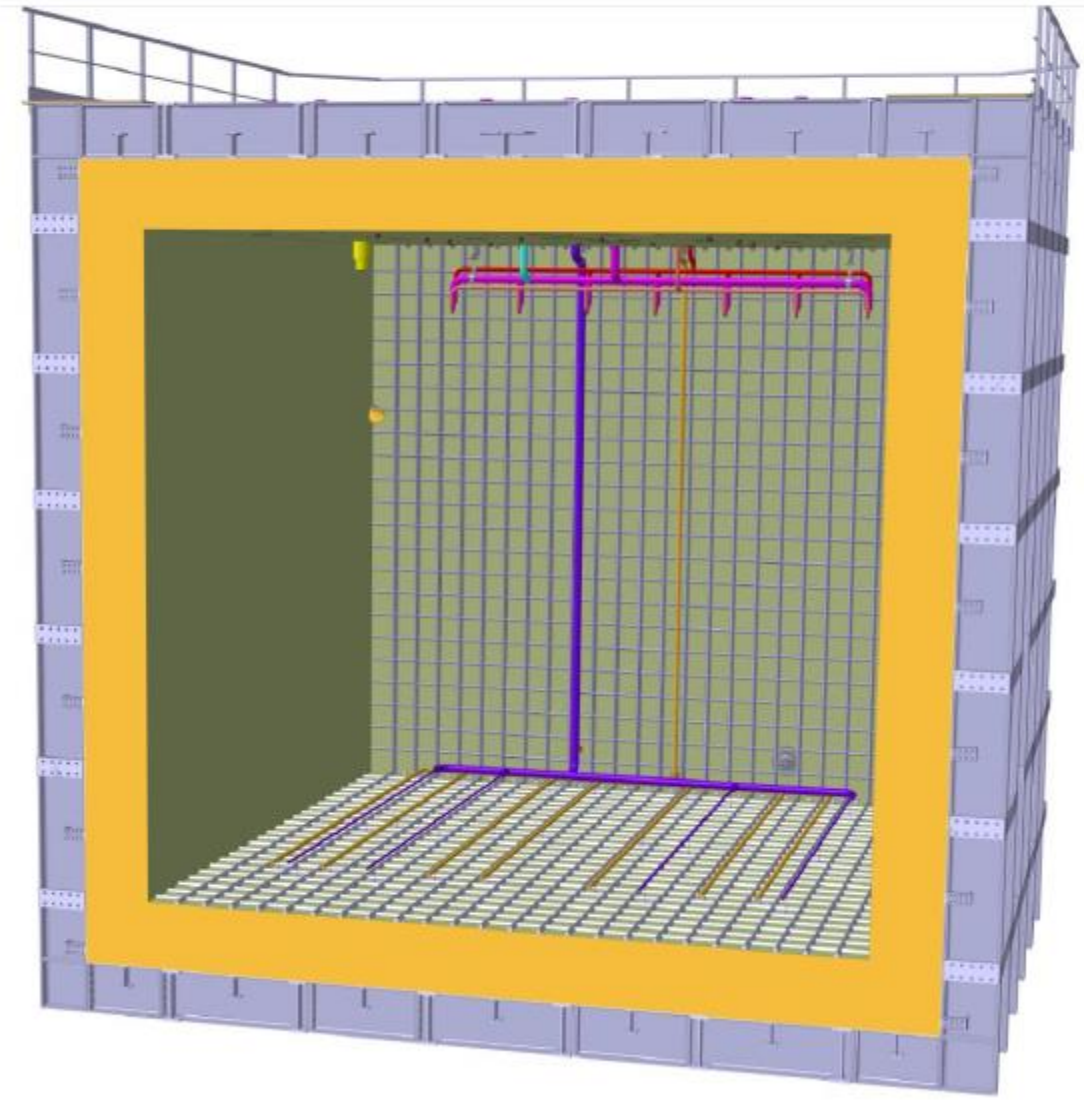

# 0) Temporary Construction Floor

- Cryostat is used as a clean Room
- Field Cage, CRP are installed inside
- Temporary construction floor is needed to protect the bottom membrane and be able to work inside with personnel lift
- Floor will be at the level of the TCO height

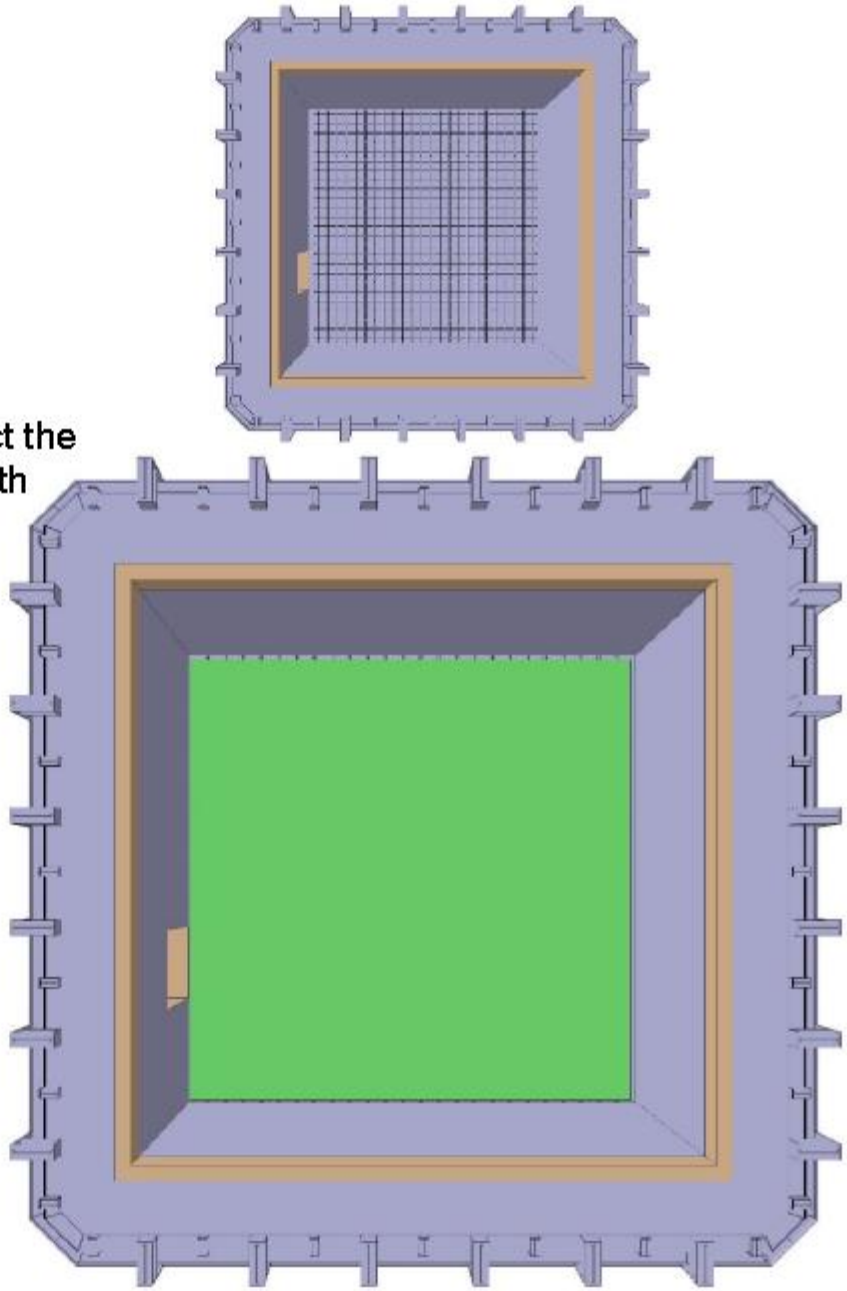

# 0) CRB – Clean Room Buffer

- Roof Hatch at the Top for lowering the various Boxes. **(MAX Size: 3,2x3,2x0.5 m)**
- Clean air from Manhole keeping the cryostat in overpressure
  → prevent dirty air to go inside the Cryostat

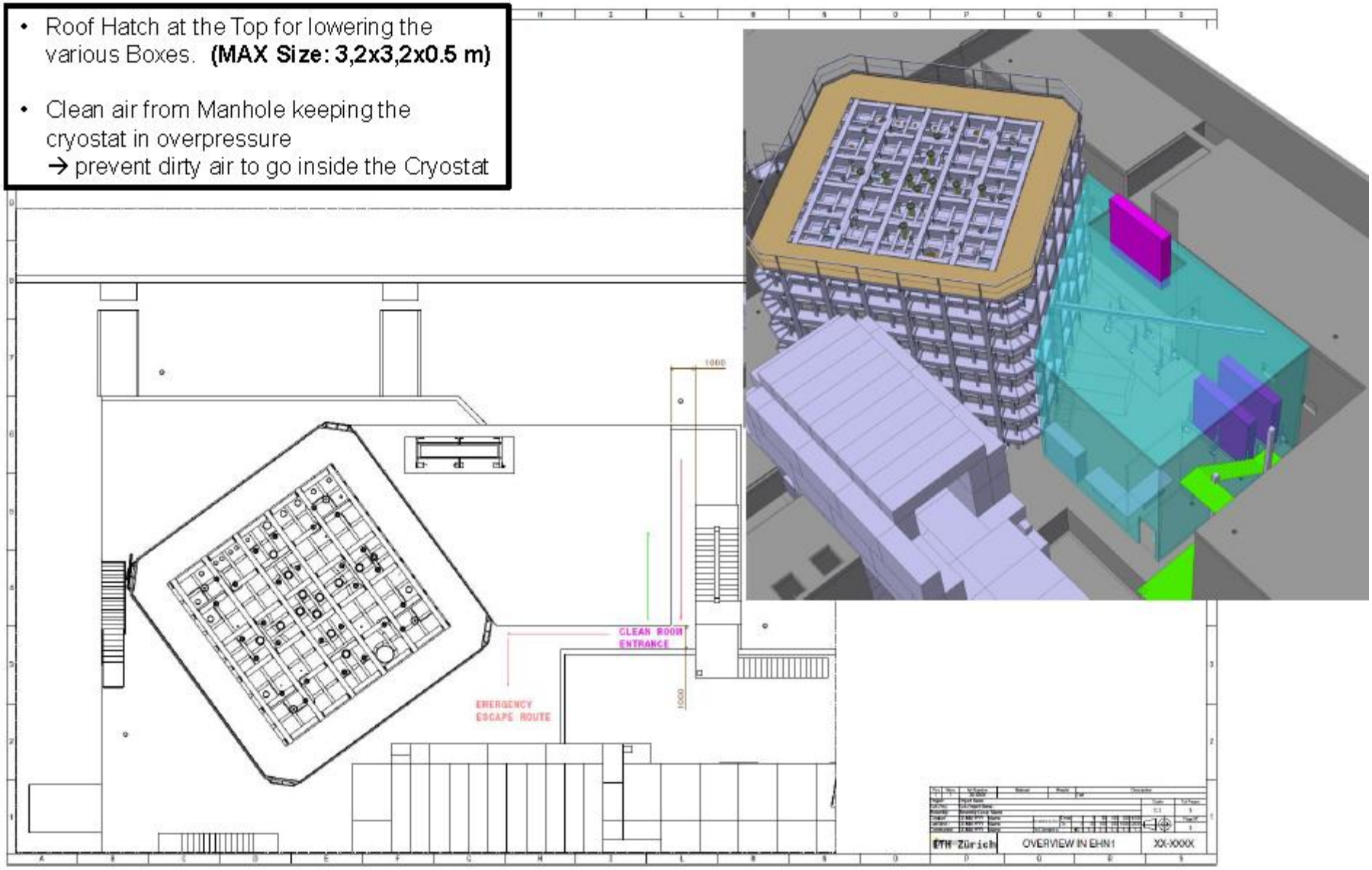

# 0) CRB – Clean Room Buffer

- CRB internal layout proposal

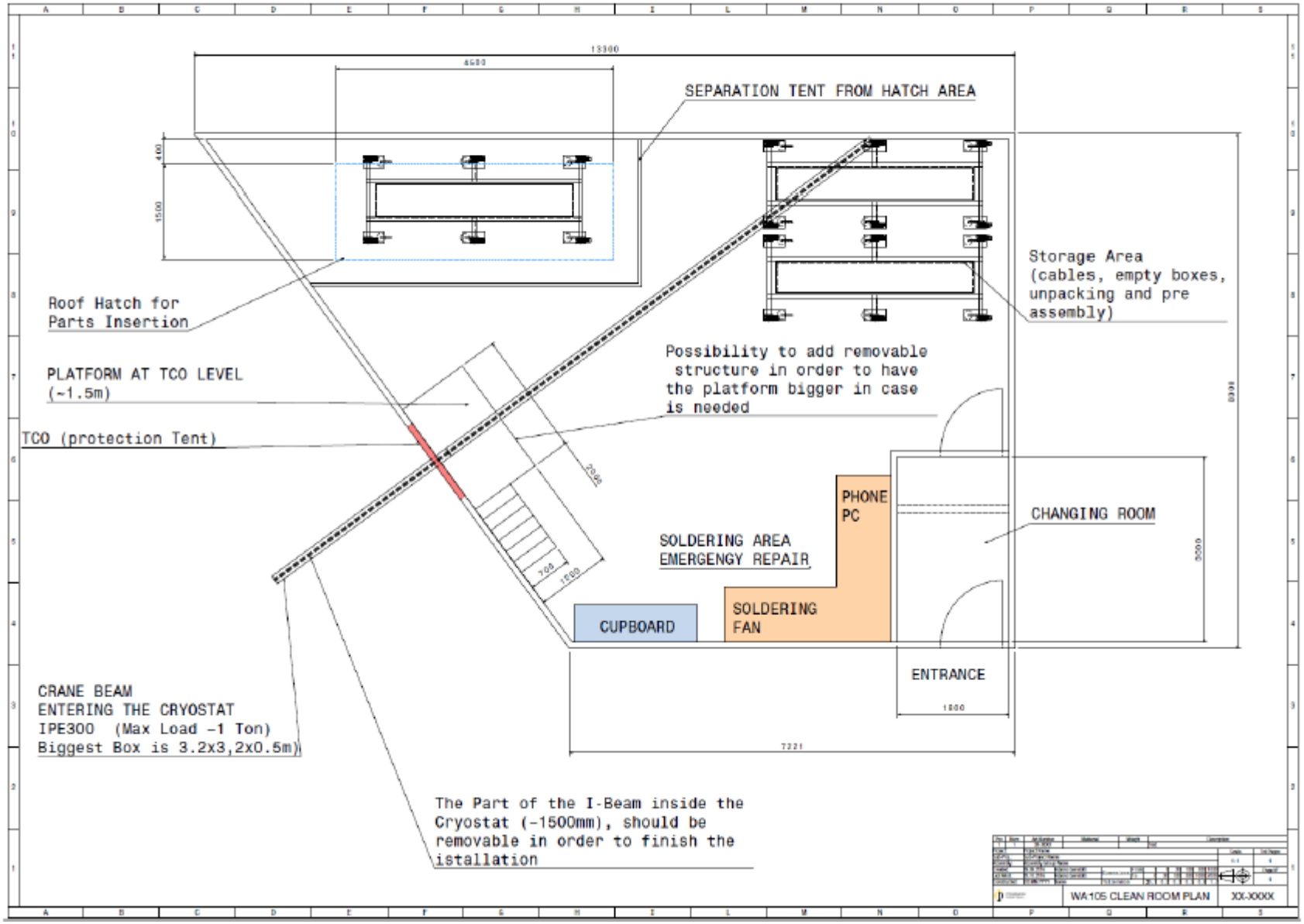

## 1) FTs Installation

- SGFT, SPFT-CRP and CRP-INS FTs needs to be there at the beginning
- SPFT-FC are for the Field Cage installation
- HVFT after the FC is installed
- TANK-INS could be installed during the PMTs installation

# Equipment needed Inside the Cryostat


- 2x personnel lift

Max Height 6.5 m

- 2 x Movable stair (demountable)
- Max Heigh ~1.5/1.7 m
- Installation of the last parts (personnel lift already out)

< 1m - In order to fit bewteen FC and Cryostat walls

## 2) CRP 3X3 m²

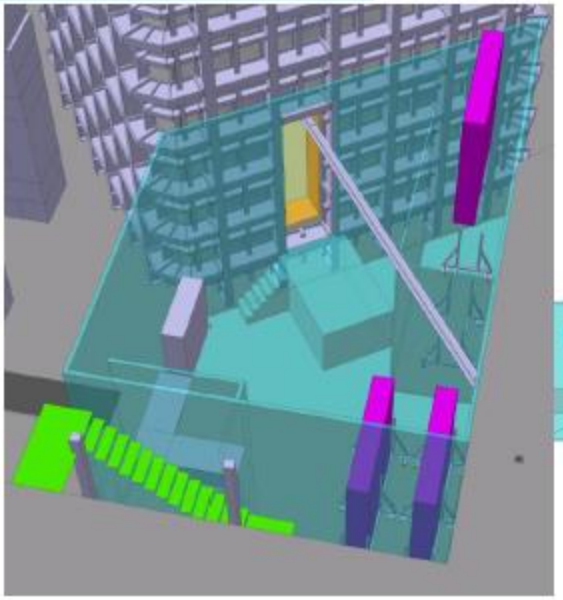

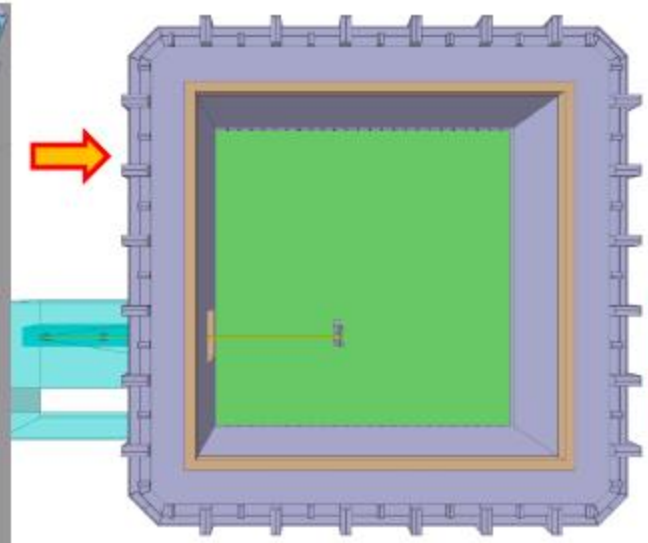

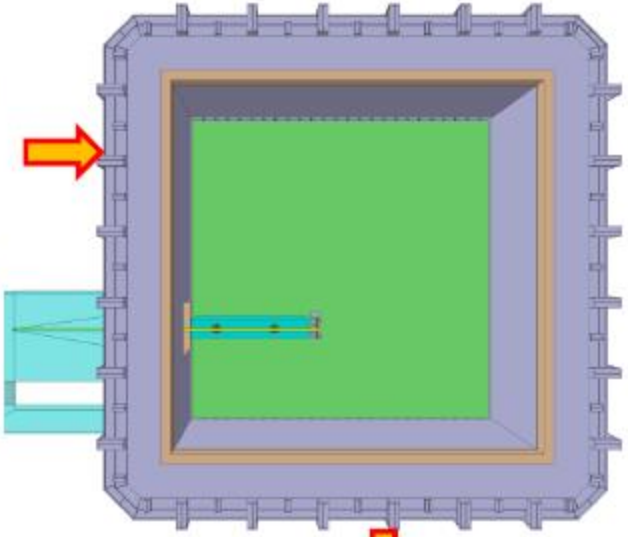

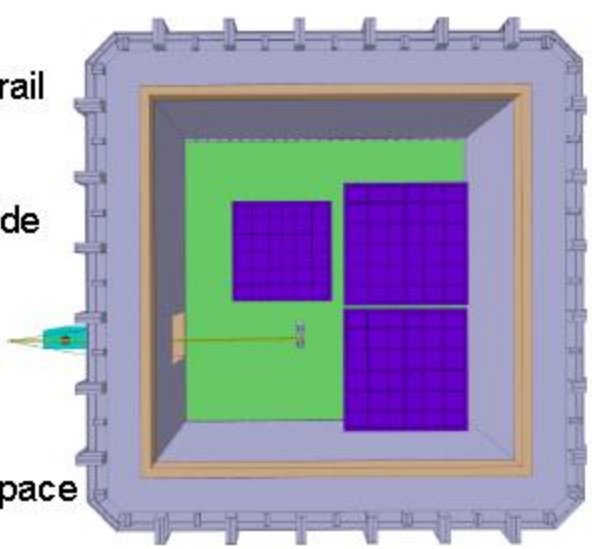

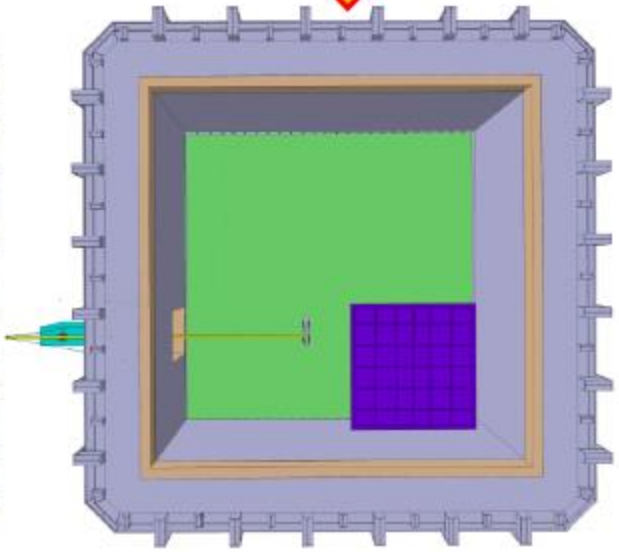

1. CRP Box inside the cryostat on the rail (BOX SIZE 3.2m x3.2 mx 0.5m)
2. Lowered, rotated and unpacked inside the cryostat
3. Placed in Position ready to be lifted (using wheels)
4. CRP Lifted in order to have all the space free on the floor

# Installation procedure on top cap

Cable from the winch is descended through the chimney to attach the CRP final cable :

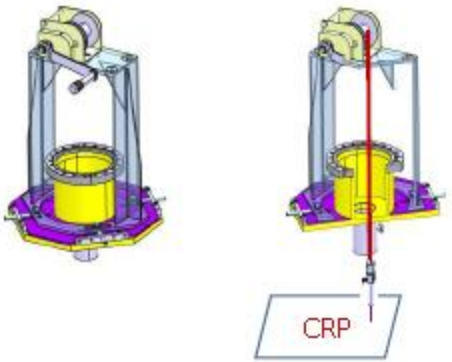


CRP is raised up with the winches, then the mechanical stop is assembled

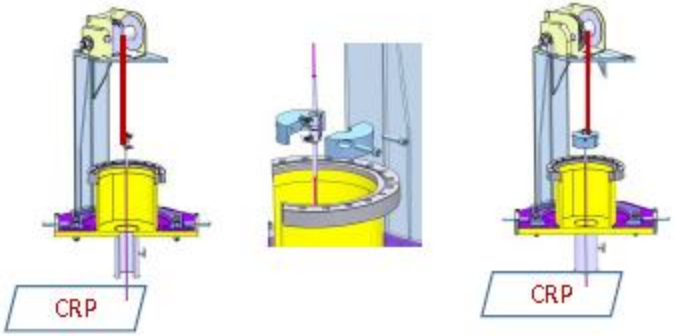


The CRP is laid down on the mechanical stop

The winch cable is disconnected

The winch is removed

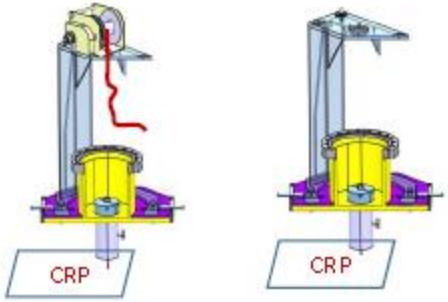


The bellow is compressed thanks to special tooling

The cable from the bellow is connected with a pin

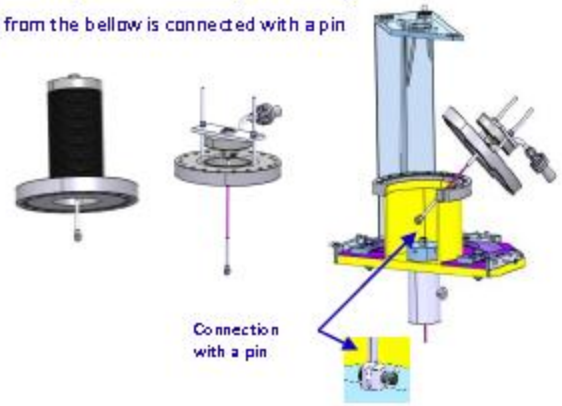


The compression tool is removed and the bellow fixed

The motor is inserted and screwed from the top

The assembly is complete and operationnal

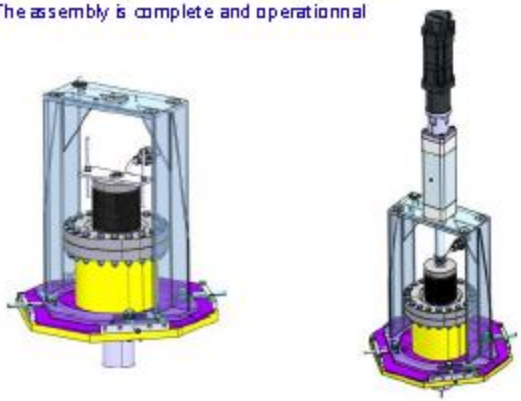

## 2) CRP 3X3 m²

- All CRPs fixed on nominal Position

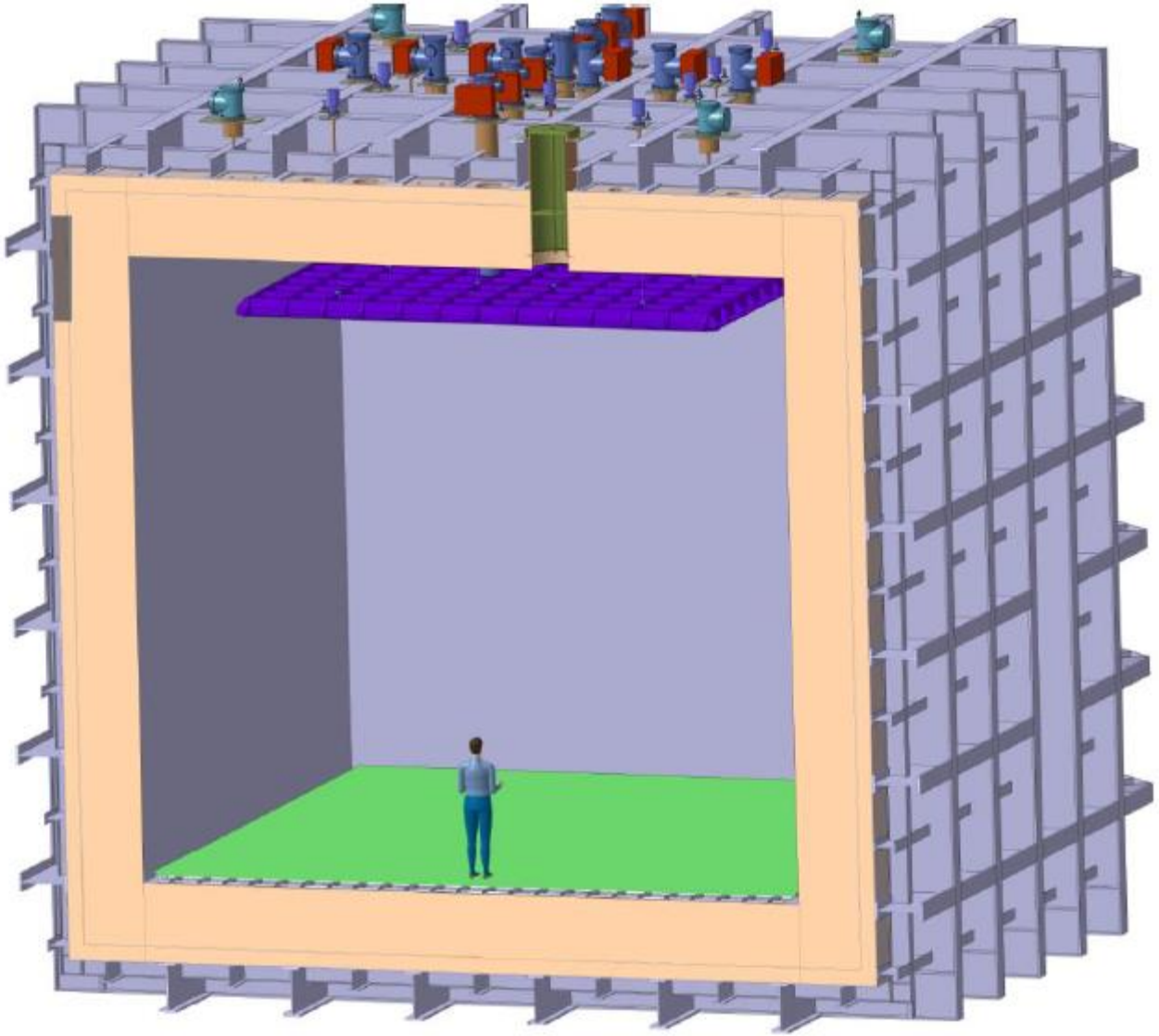

## 3) Field Cage

- Sub- Modules of the Field Cage

| Sub Module | X | Y | Z |
|---|---|---|---|
| 1st Sub-Module | 2180 | 3050 | 165 |
| 2nd Sub-Module | 1980 | 3050 | 165 |
| 3rd Sub-Module | 1980 | 3050 | 165 |

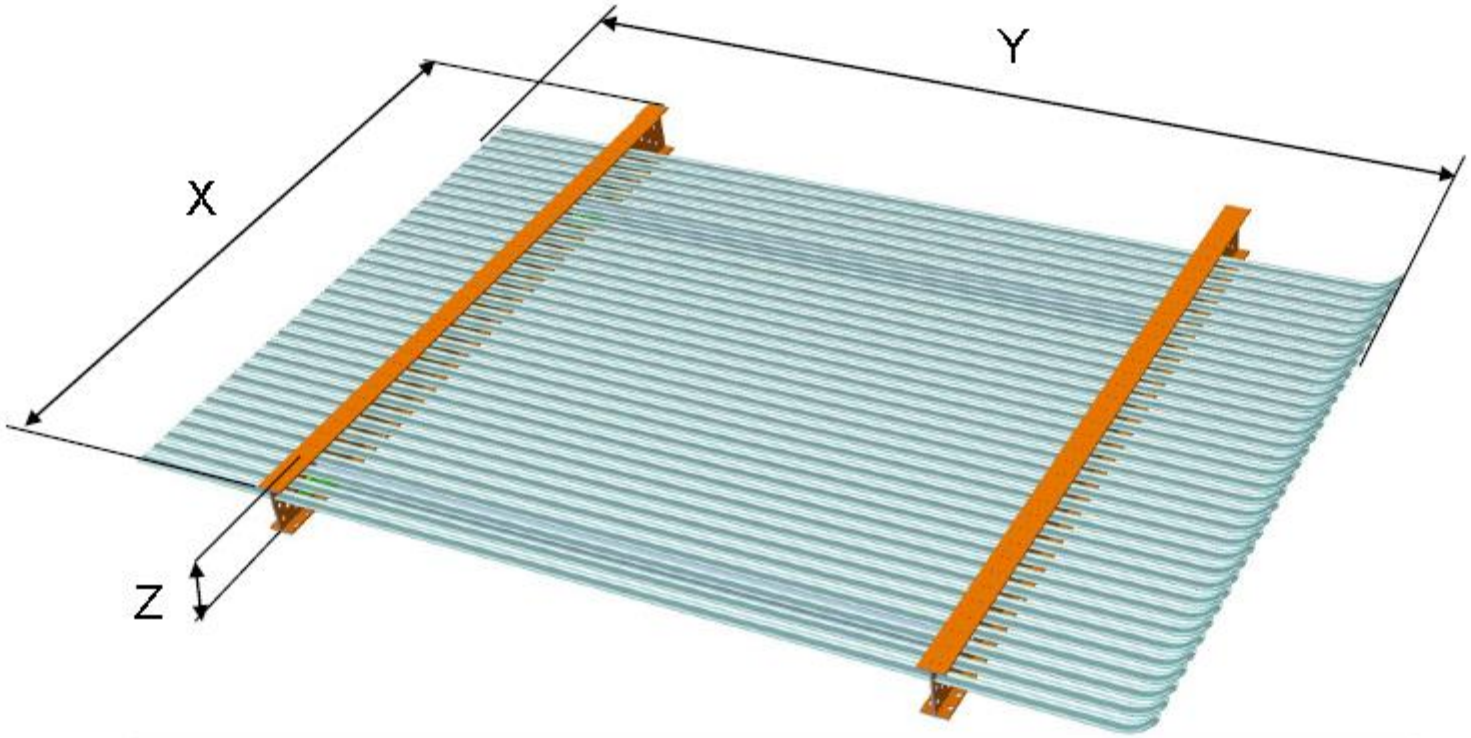

## 3) Field Cage

- Assembly of the Sub Modules inside the CRB → 2 Person 1 Module per day
- Transfer of the Sub Modules inside the Cryostat without Box:
  Reinforcement is needed.

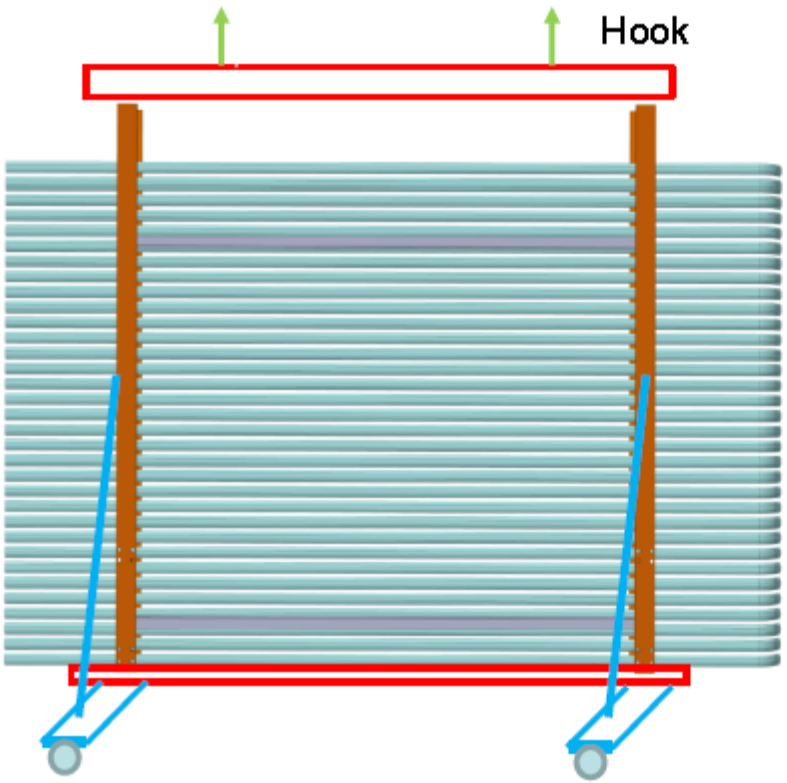


Steel Reinforcement using the sub modules connection holes

- Once inside mount wheels on bottom reinforcement in order to move the sub module on place.

# 3) Field Cage

- Accordingly to the position of the CRP → Mark the position of the field cage on the construction floor
- Position the SS I-Beam (hanging system) in the right position
- Lower the hanging SS wire and connect to the I-Beam → Connection point centered at the wire

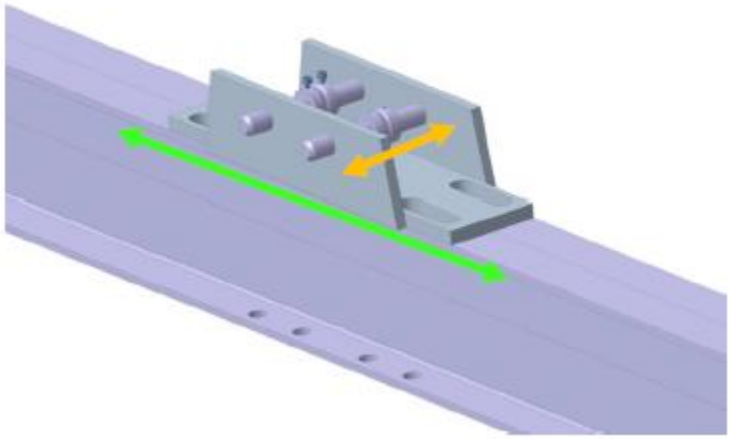

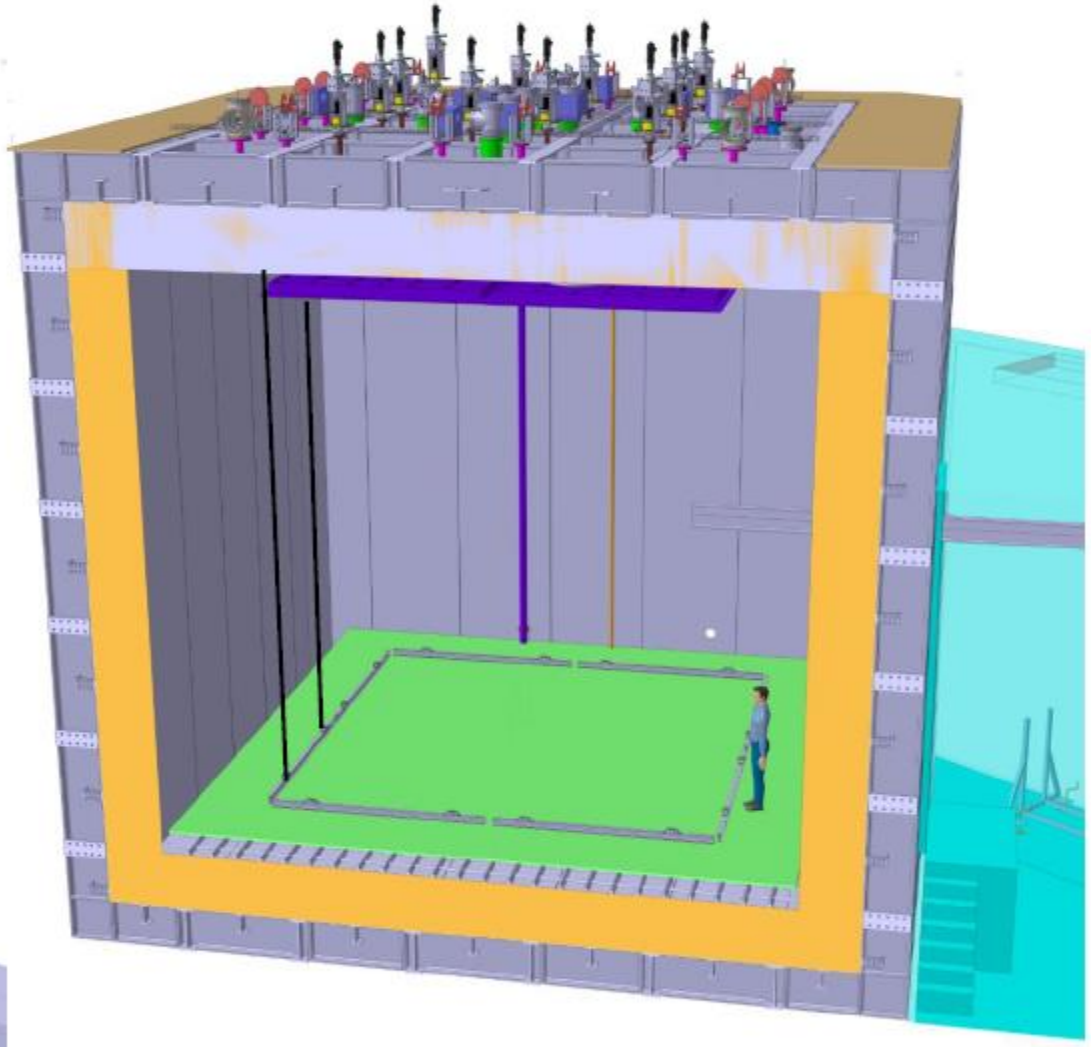

## 3) Field Cage

- Lift the I-Beam ~2.5 m
- Bring in first sub modules and connecto to hanging system
- Already install the PCB boards of the HV divider (if it's needed in module)

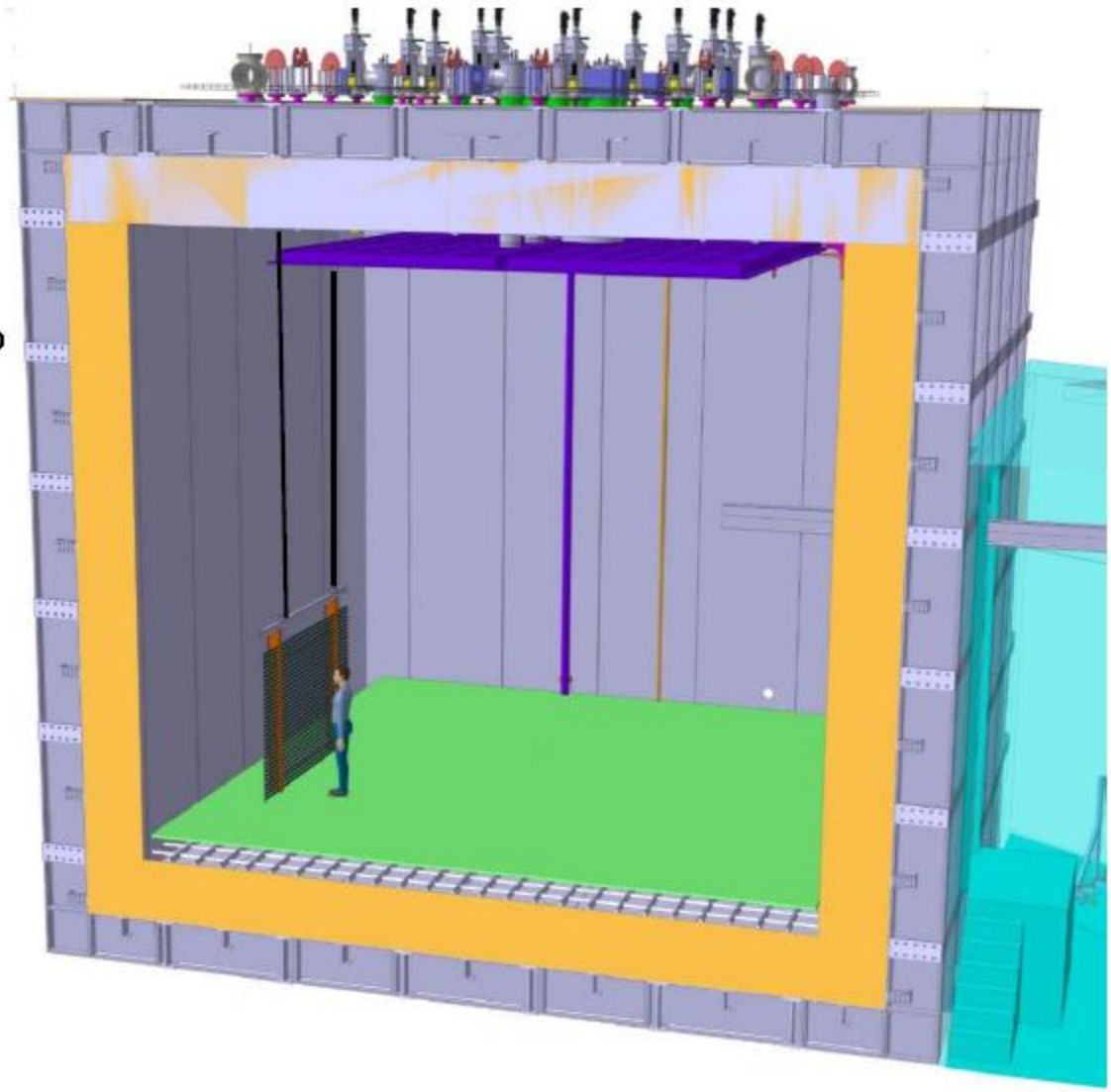

Sub module Installation:

- 2 Person on Top Lifting
- 2 Person inside the Cryostat

# 3) Field Cage

- Same for 2nd sub module
- Already install the PCB boards of the HV divider (if it's needed in module)
- Lift for another 2.5m

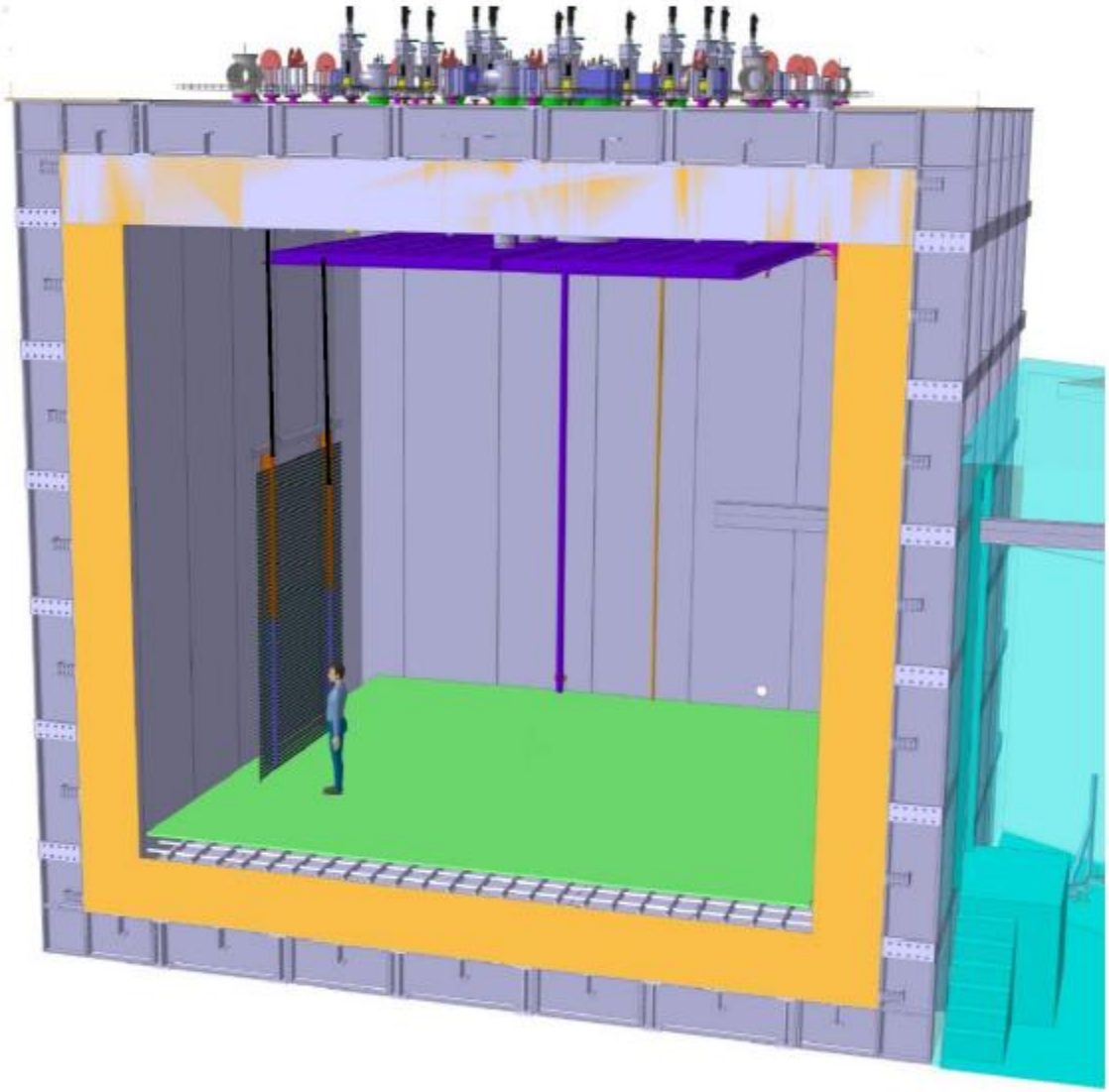

# 3) Field Cage

- 3nd sub module
- Lift the entire module at his nominal position

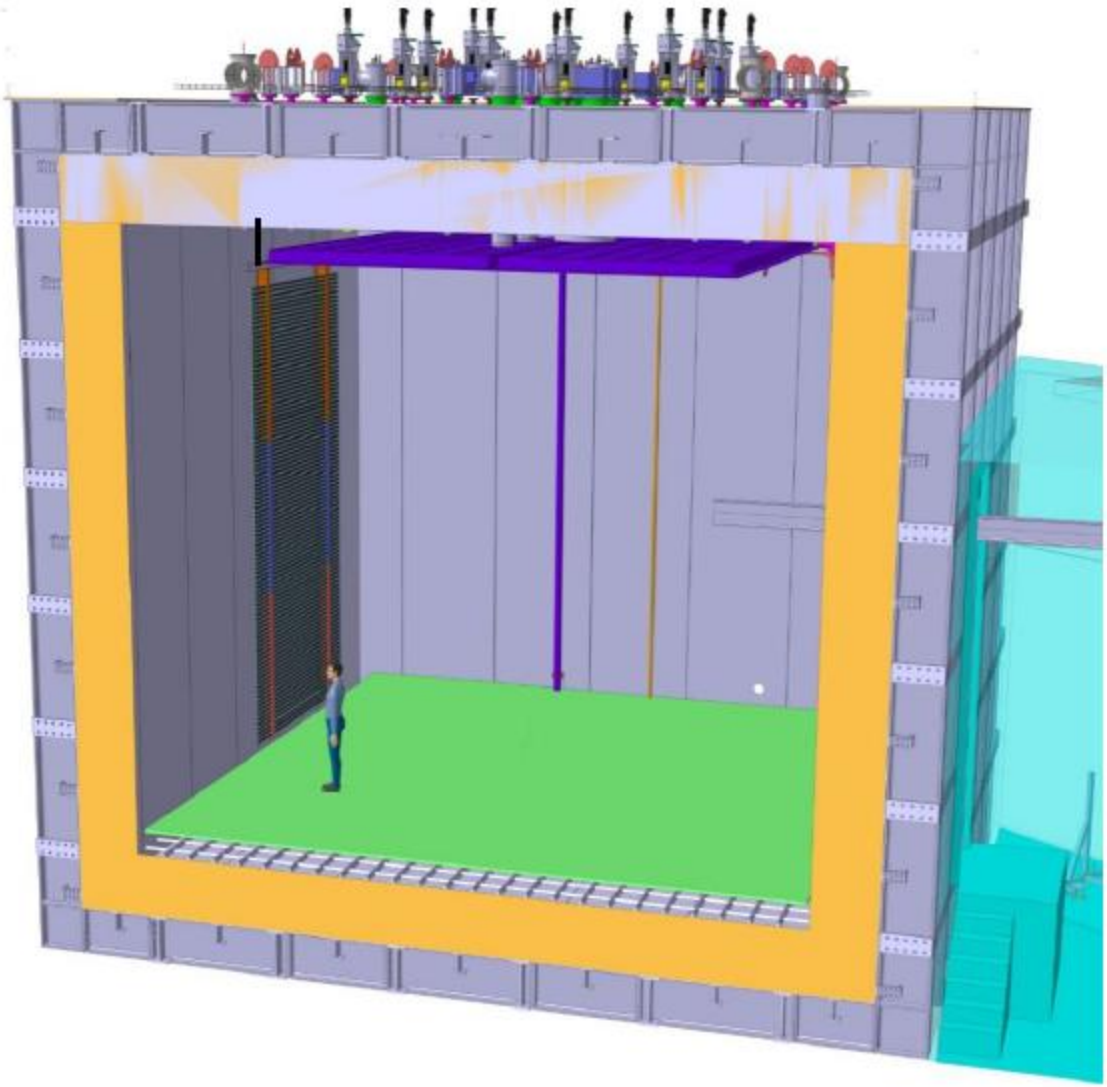

# 3) Field Cage


- After the Field Cage is fully installed and in the final position
- Final wires are installed with possibility to fine tune the lenght
- Installation wires are than removed

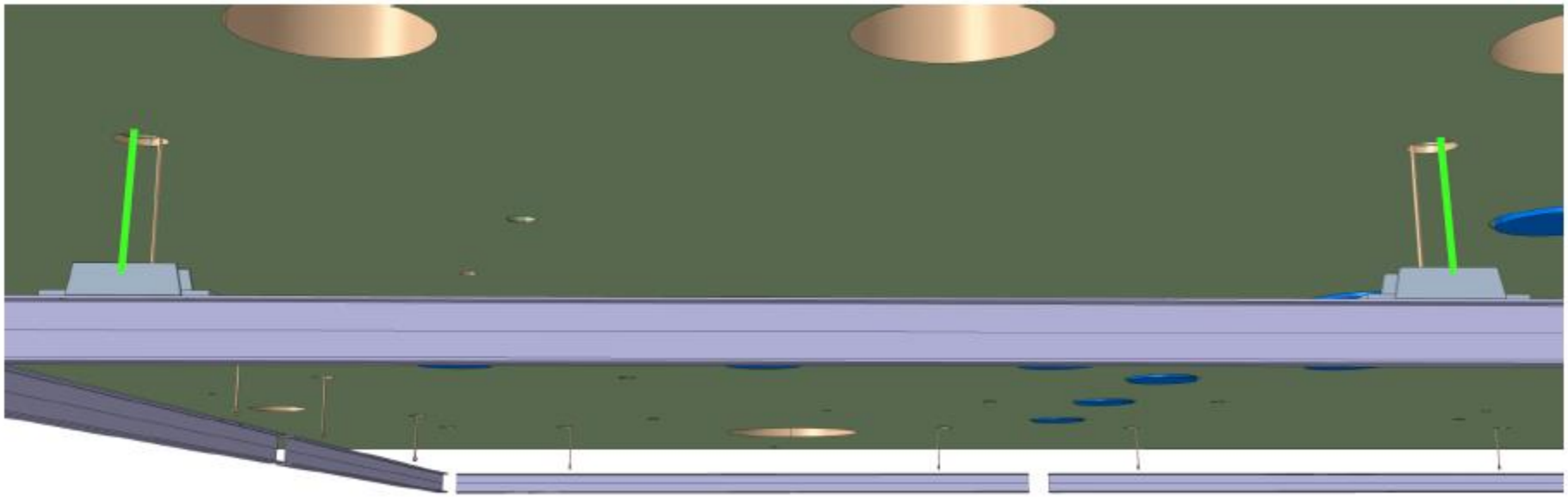

## 3) Field Cage

- 5 X Modules complete
- 2 x Modules 2/3 completed
- 1 Module missing (TCO Side)
- Install where is possible Clips and reinforcement.

## 4) Cathode and Groundgrid

- Bring in the 5 x FC Sub Modules left and place them vertically at the side of the Cryostat
- Bring in Cathode and Ground Grid Modules
- Assemble Cathode and Ground Grid connected together on wheels supports and move it to a corner

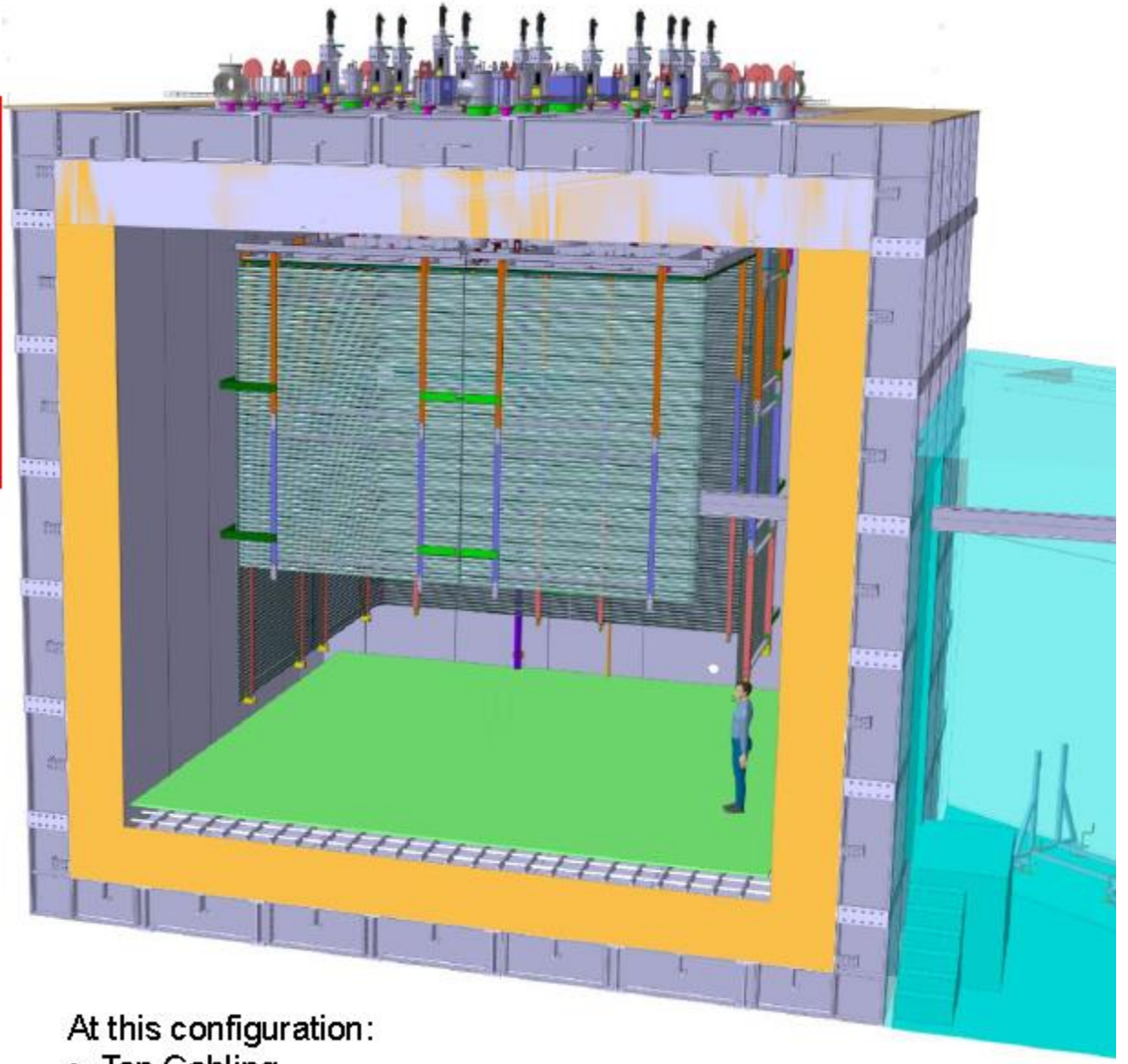

At this configuration:

- Top Cabling
- Beam Plug Installation

## 4) Cathode and Groundgrid

- Remove Crane I-Beam inside the Cryostat
- Install 4 Sub modules + missing reinforcement Clips, etc..
- Sub module in front of the TCO still not installed
- Cathode+Groundgrid in a corner leave ~1m space on both side of the FC modules

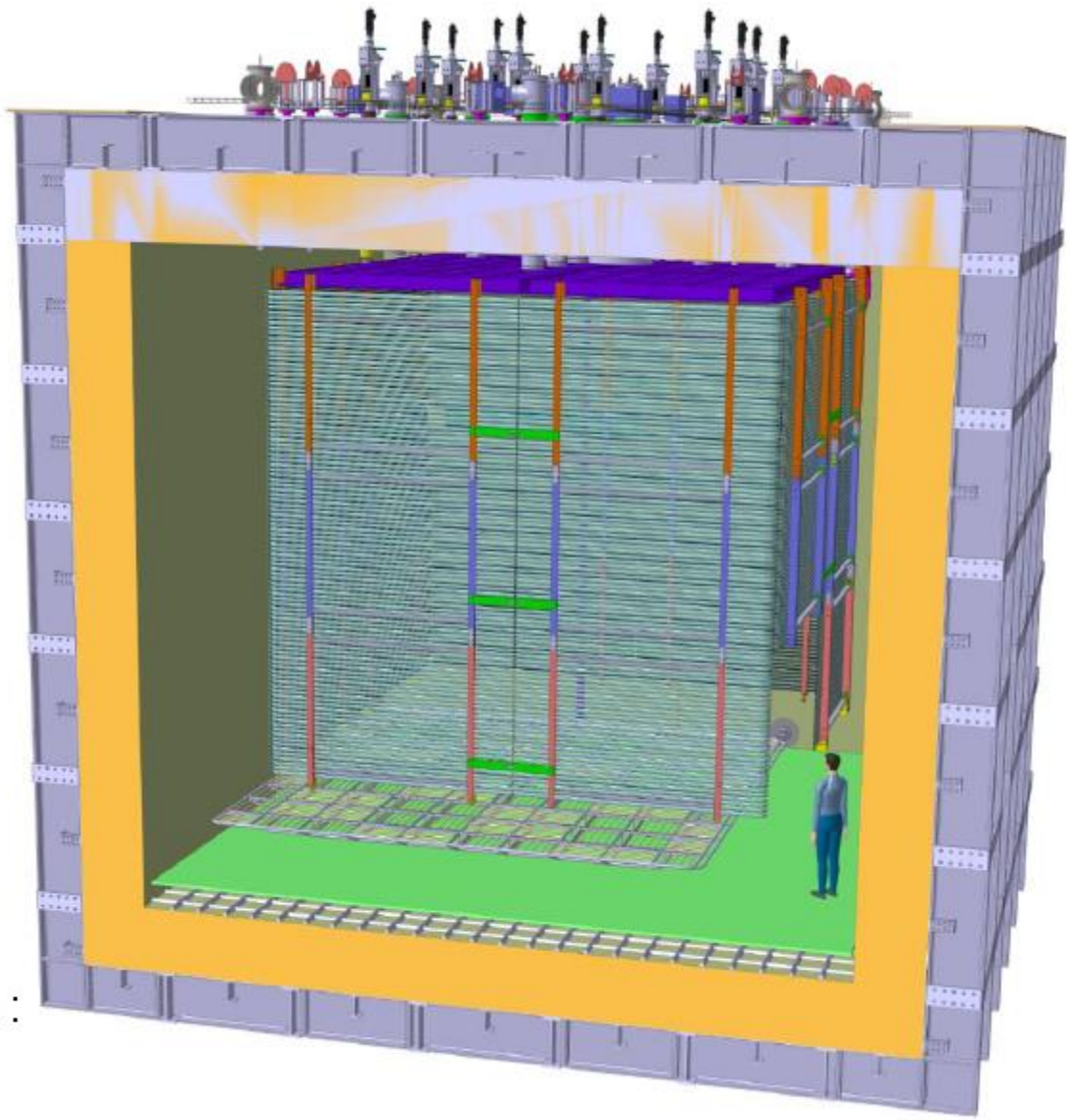

Clips and Reinfocement Installation :

- 1 Person Inside the field cage
- 1 Person Externally of the field cage

# 4) Field Cage, HV degrader and HVFT

- Install first 2/3 of the HV Degrader
- Insert HVFT
- Bring out personnel lift

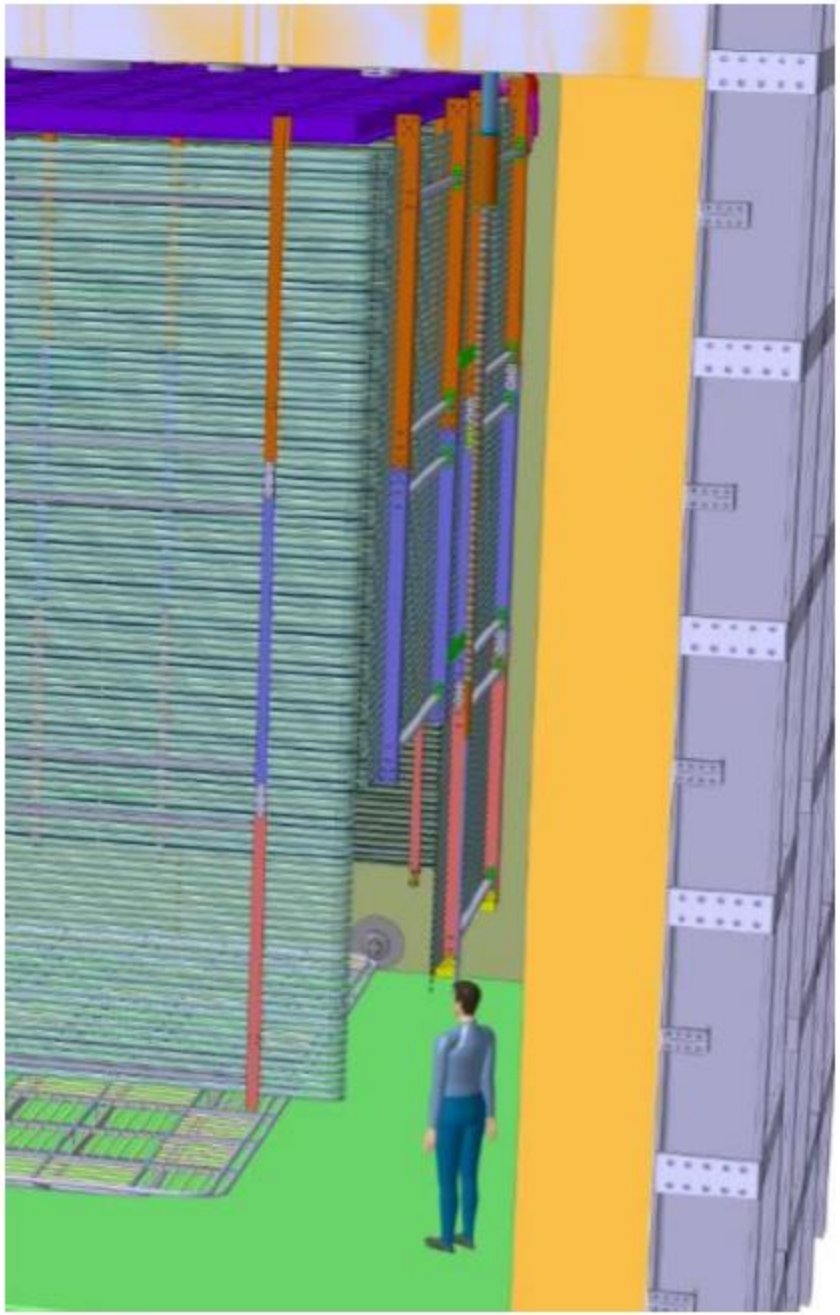

## 4) Field Cage, Cathode and Groundgrid

- From this point movable stair will be used
- Install last sub modules
- Install missing clips and reinfocement
- Complete the degrader installation
- Lift the Cathode+Groundgrid and fix it to the field cage (manual lifter)

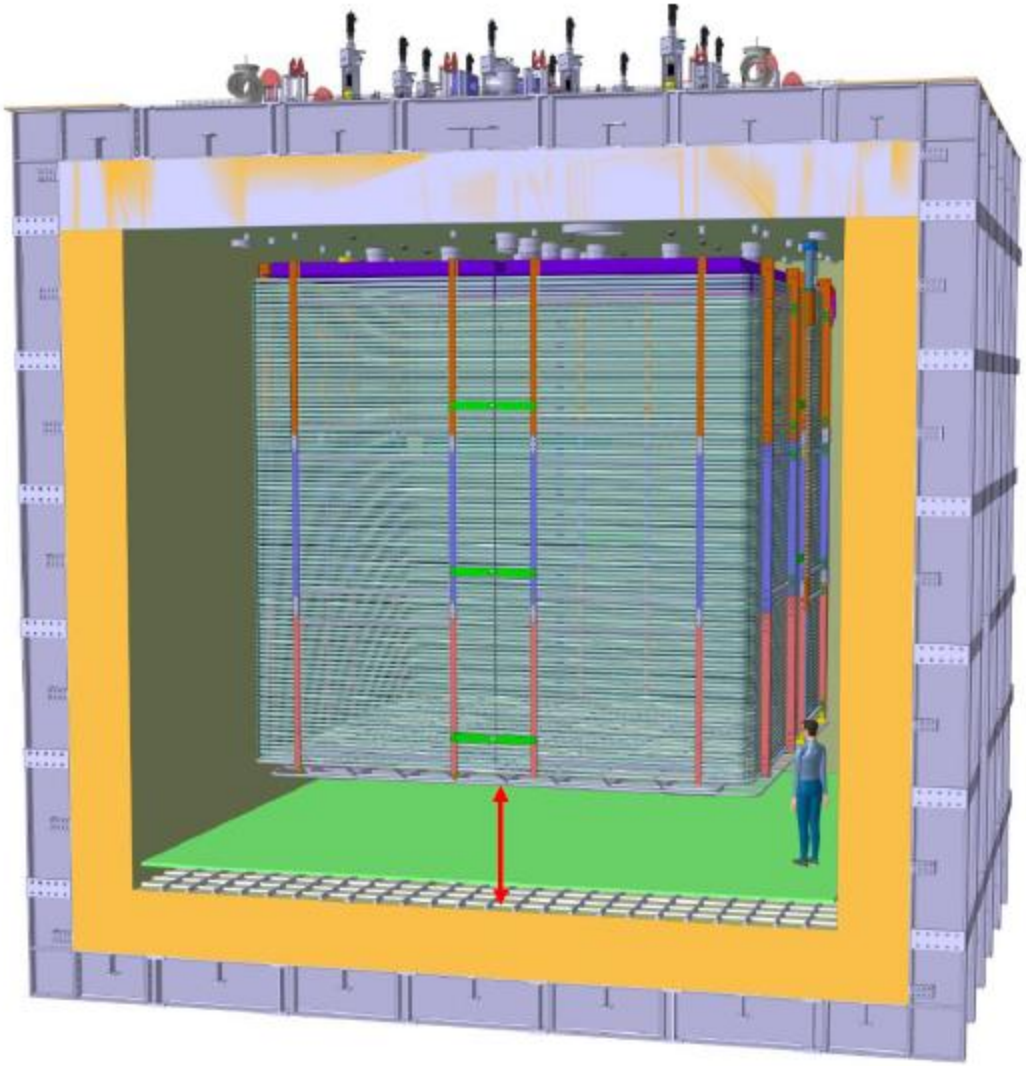

Membrane - Ground Grid distance: ~1.2m

## 6-9) Removal of Construction Floor Groundrid and PMTs

- Removal of the Construction Floor
- Installation of the PMTs
  → ~1.2m flat membrane to Groundgrid
- Positioning of the Groundgrid pillars
- Lowering of the Ground Grid
- PMTs cabling

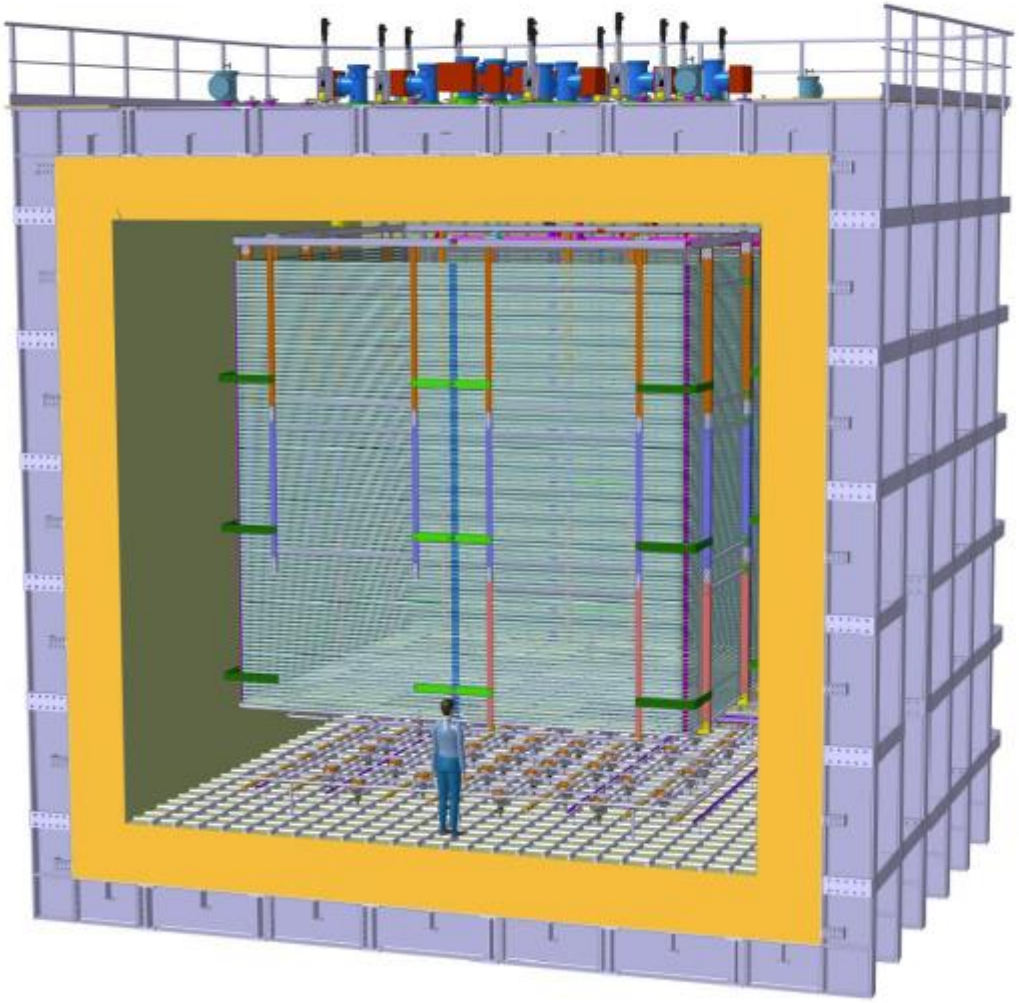

## 10) Closure of the TCO

- TCO closed