Standard Operation of the Magnet Protection System

M. Mentink, Z. Charifoulline, A. Verweij,

on behalf of the MP3 team

March 15th 2017

Motivation

~ 40 electrical circuits
with 150 nc magnets
in the LHC

~1600 electrical circuits
with 10 000 sc magnets
in the LHC

~ 25 electrical circuits with
800 nc magnets
in SPS extractions lines &
CNGS

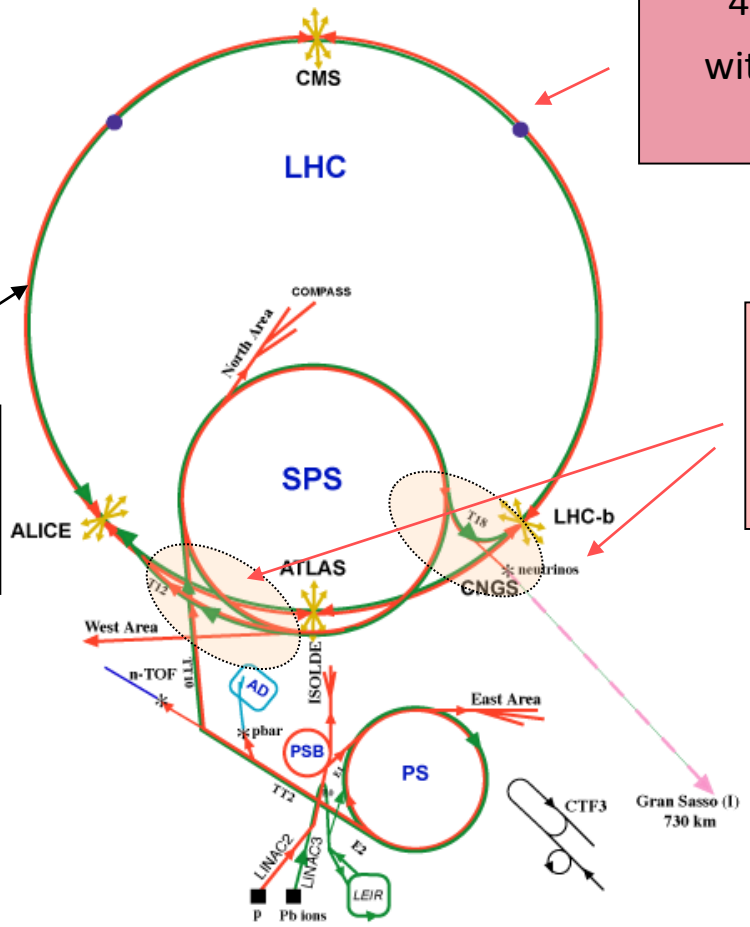

Source: I. Ramirez & M. Zerlauth - Interlocks for Magnet Protection System

- LHC: Complex machine, over 10000 magnets, most of which are superconducting
- Failure of parts (for instance: main dipole) prevents LHC operation, and replacement of defective magnet can take up to a year
- **Magnet protection is critical!**

Overview

- What is required to start operation?
- Superconducting magnets in the LHC
- Quench detection systems (QDS)
- Typical quench voltage signals
- Procedure for dealing with quenches
- Example: Quench Heater failure
- Summary

What is required to start operation?

Interlock type A (Main dipoles)

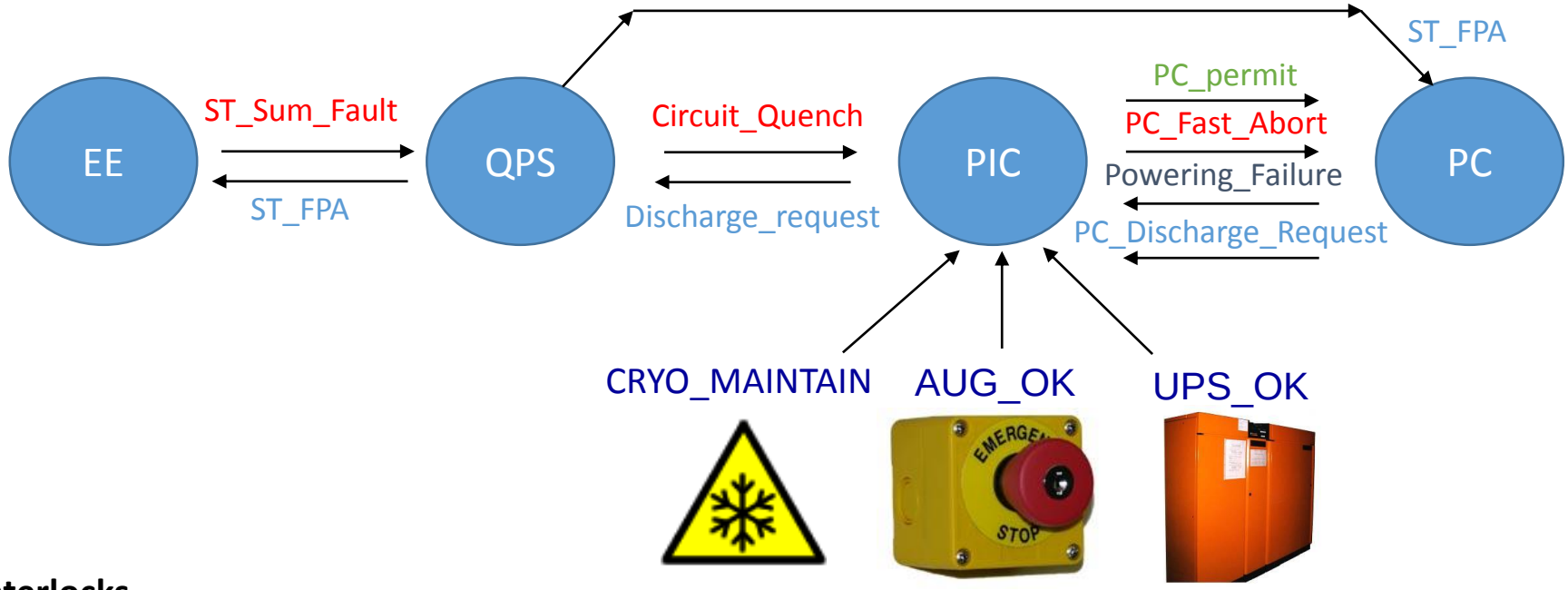

Interlocks

- Before ramping up: Are all systems ready to go?
- Machine state communication managed through hardwired interlocks: EE (Energy extractor), QPS (Quench protection system), PIC (Powering interlock controller), PC (Power converter)
- Quench loop connects state of QPS devices and EEs in one single loop per circuit
- Discharge loop (for device reset request) connects PIC, PC, and QPS devices
- In addition: Global interlocks (Cryo, Emergency stop, UPS), and software interlocks (Cryo scada, PIC scada, QPS scada)
- **Interlocks are present to insure that operation does not start until all systems are ready and to respond quickly in case of a malfunction**

Superconducting magnets in the LHC

8 Sectors

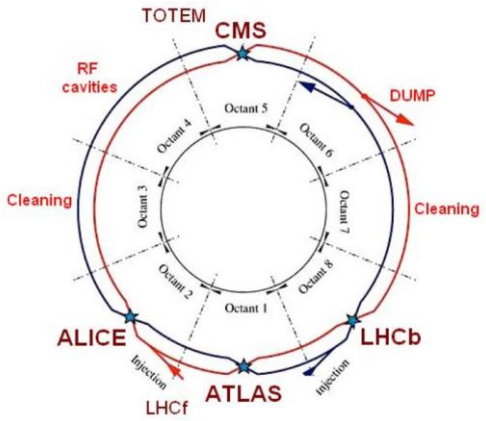

https://www.lhc-closer.es/taking_a_closer_look_at_lhc/0.lhc_layout

154 Main dipoles per sector,
2 Energy extractors, 2 PCs, low-pass filter

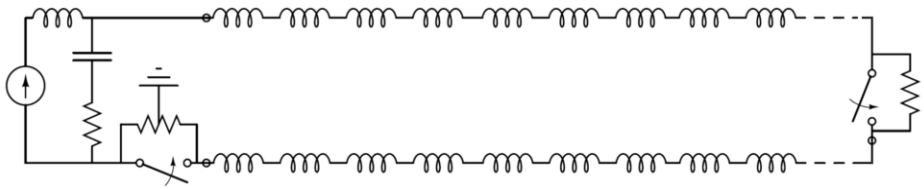

Source: Prioli et al., "Circuit Simulations …", (2017)

In addition: Quadrupoles, sextupoles, octupoles, etc.

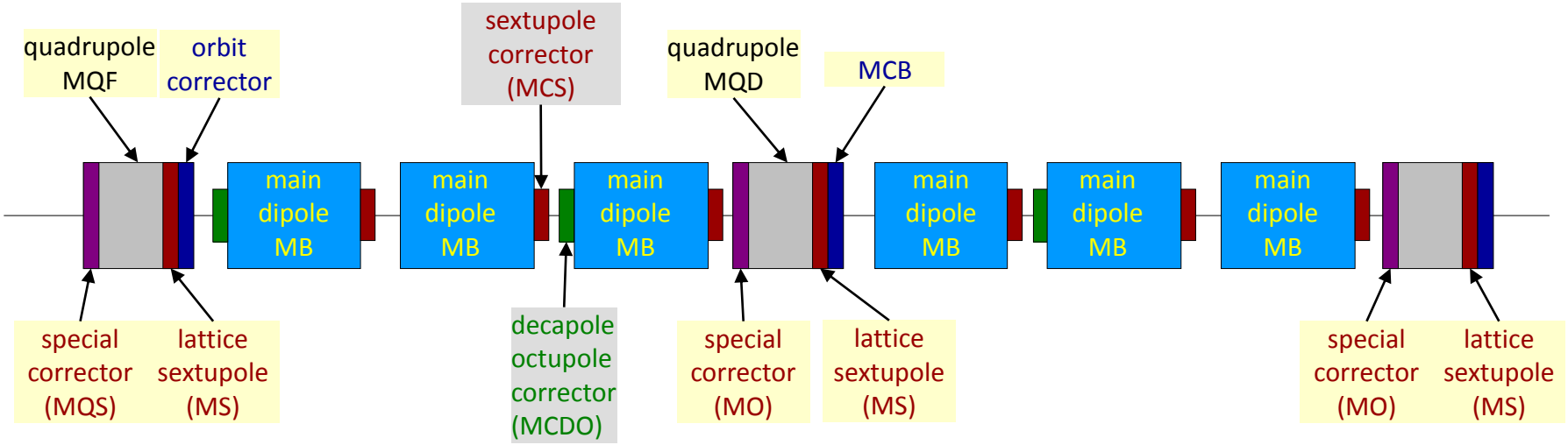

Source: Schmidt (2007)

Every superconducting element (magnets, busbars, HTS current leads) must be protected

Quench detection systems

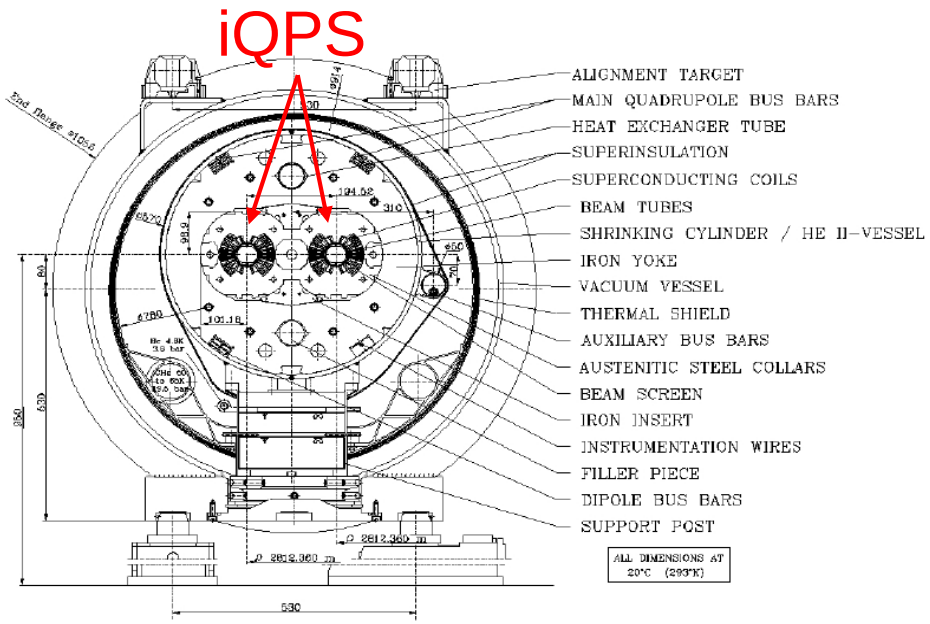

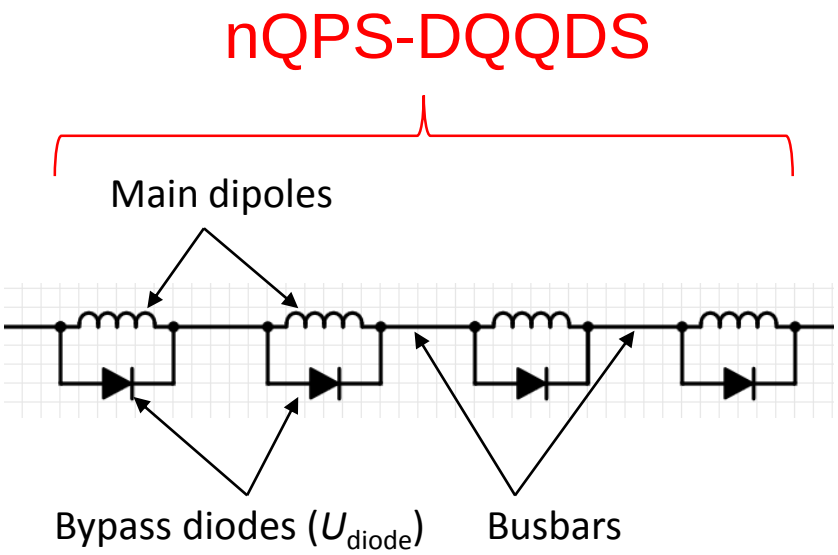

Two Quench Detection Systems on RB circuits

- iQPS: Compares voltages over two apertures within dipole, threshold: 100 mV
- nQPS-DQQDS: Compares voltages over diodes parallel to dipoles:
  - 4x U_{diode} monitored per crate (3 from electrically adjacent MBs + 1 reference MB)
  - No quench detected: Compares highest to second lowest voltage
  - After quench detected: Compares highest to lowest voltage, excluding quenched magnet
  - Threshold: 500 mV (regular), or 700 mV ("Sunglasses", immediately after FPA)
- In addition:
  - Busbar protection (nQPS-DQQBS): Compares busbar voltages (5 mV threshold)
  - Current lead protection (3 mV over HTS section + 50mV over copper section)

Typical quench voltage signals

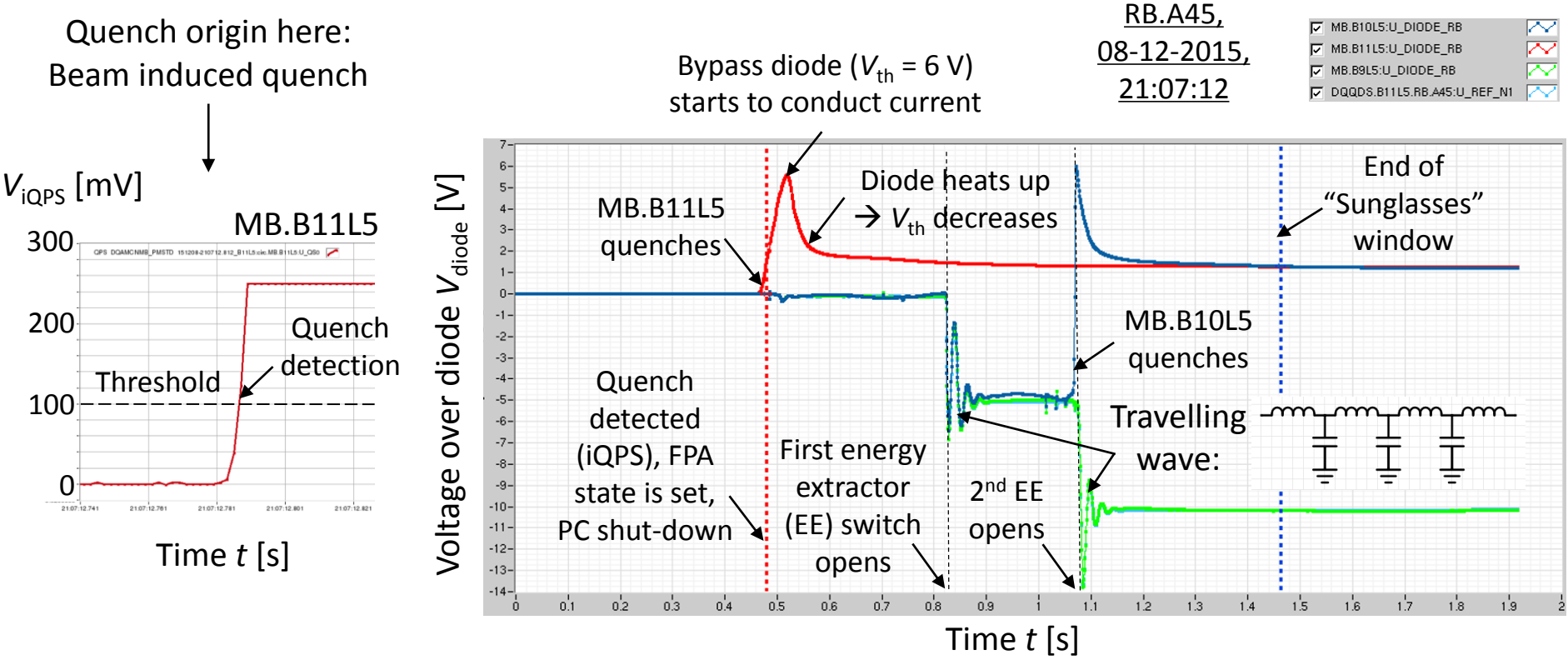

Quench voltage signals (RB circuit)

- Voltages seen by iQPS (left) and nQPS (right) are subject to a number of phenomena
  - Quench (here: Beam induced quench) → Dipole magnet voltage rise → Quench detection (here: iQPS)
  - Temperature dependent diode threshold
  - Energy extractor (EE) switch opening, with some delay after FPA
  - Travelling wave (Inductors + capacitors → Position-dependent voltage oscillations)
  - Other effects: Inductive pickup from quench heater firing, inductive coupling to other circuits

MP3 team: What to do after a quench

Response after quench detected

- After quench of main dipole, typically several hours required to cool magnet and energy extractors
- During this time: Quench analysis (=MP3 team) to ensure that QPS integrity is not compromised
- In general, role of MP3 team: Try to understand signals, propose improvements, ensure correct operation, potentially block LHC operation in case of magnet protection failure

Things to check immediately after quench

- Ground current, circuit current decay
- iQPS / nQPS signals
- Quench heater voltages and currents
- Voltages over energy extractors
- Voltage feelers (voltage to ground)

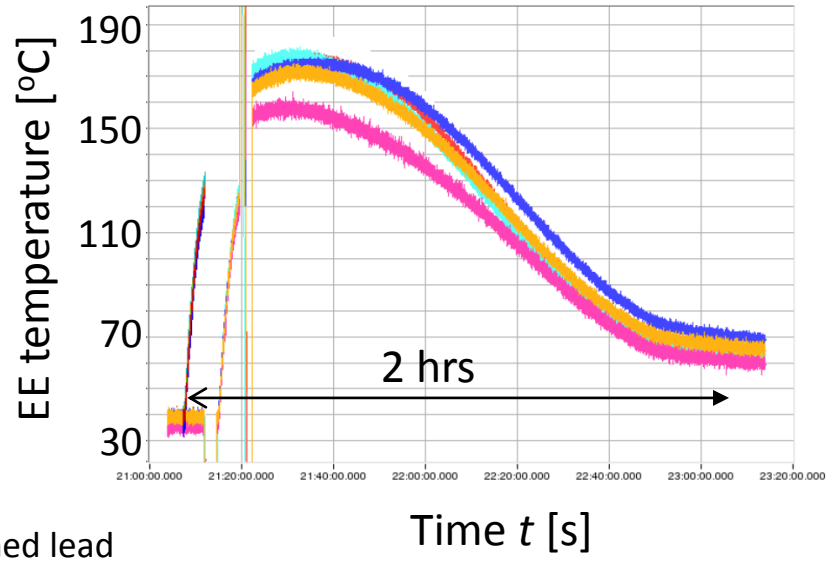

Things that may go wrong

- Quench heater failed to fire, shorted to magnet or ground, burned lead
- Magnet is shorted to ground / inter-turn shorts / Diode malfunction
- Energy extractor switches fail to open
- Synchronization issues

Result

- Quench understood, no serious magnet issue, QPS system operates correctly → LHC ready from QPS perspective
- Problems observed → Contact senior staff and potentially delay ramping up of LHC

Example: Quench Heater failure

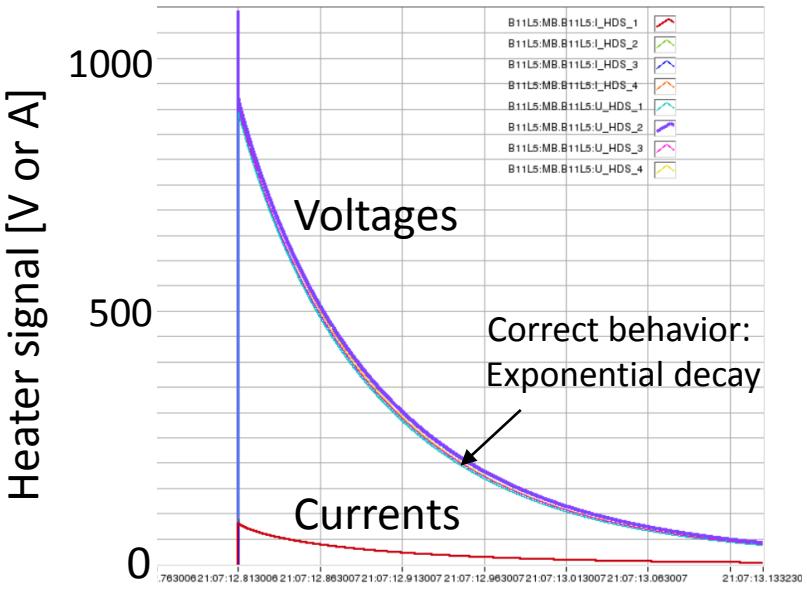

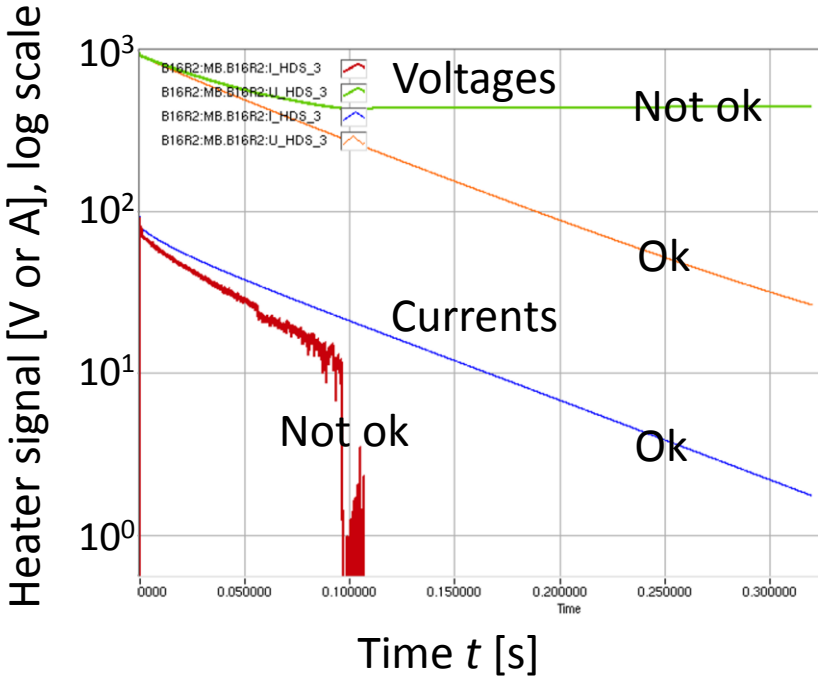

What happens in case of failure?

- Typical quench heater failures:
  - Short to ground
  - Short to magnet
  - Fails to fire
  - Current lead burned (shown on left)

- Result: ELQA team has to rewire heater connection, so that malfunctioning quench heater is replaced with redundant quench heater

Summary

State of LHC is communicated through hardware and software interlocks

- EE, QPS, PIC, PC interlocks → Status indicators
- QPS / discharge loop: Communication between EE, QPS, PIC and PC devices

Quench detection

- iQPS: Monitors voltage between apertures in single dipole
- nQPS-DQQDS: Monitors diode voltages over neighboring magnets
- Busbars and current leads

Quench mitigation

- Quench heaters on superconducting magnet coils
- Energy extractors

Procedure after quench observed

- Immediately after: Go through checklist, making sure that quench is understood, no serious magnet issues have arisen, and QPS devices are operating correctly
- Subsequently: Discuss with MP3 team in case of anomalous signals