First Beam Characterization by Means of Emission Spectroscopy in the NIO1 Experiment

M. Barbisan[1], B. Zaniol[1], M. Cavenago[2], G. Serianni[1] and R. Pasqualotto[1]

[1]**Consorzio RFX** (CNR, ENEA, INFN, Università di Padova, Acciaierie Venete SpA) - Corso Stati Uniti, 4 35127 Padova - ITALY
[2]**INFN-LNL**, v.le dell'Università 2, I-35020, Legnaro – ITALY
Corresponding author: Marco Barbisan marco.barbisan@igi.cnr.it

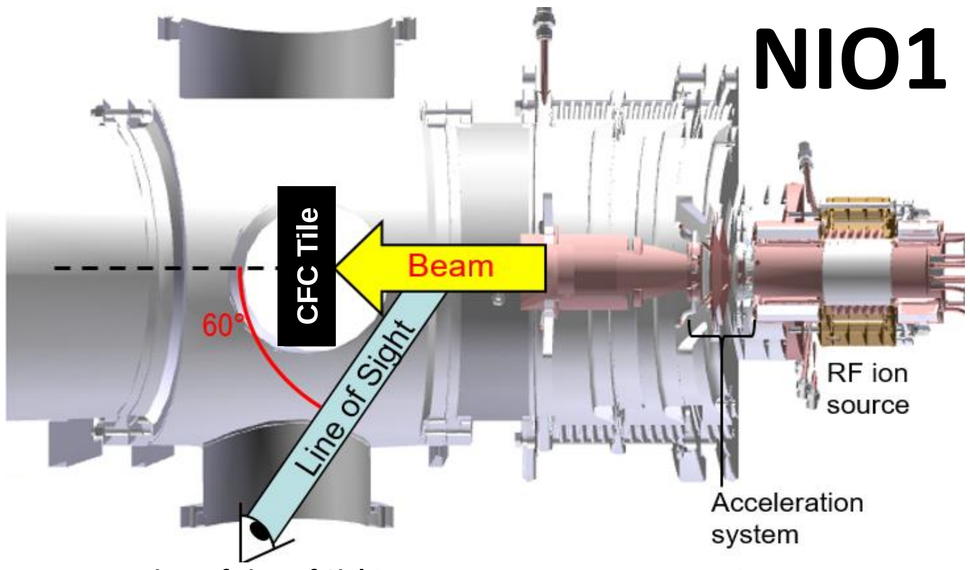

Neutral Beam Injectors (NBI) will have a relevant role in future fusion reactors. The NIO1 experiment [1-2] is devoted to optimize the production, acceleration and neutralization of negative ions, with the development and test of new concepts for the future NBI of the DEMO reactor.

NIO1 hosts a flexible RF H^- ion source; H^- ions are accelerated up to 60 keV for a max. total current of 130 mA (with future Cs deposition) by a set of grids: Plasma Grid (PG-facing the source), Extraction Grid (EG), Post Acceleration Grid (PA-at ground voltage) and Repeller (REP). The grids have a square lattice of 3x3 apertures. The horizontal and vertical spacing between adjacent apertures is 14 mm, while the diameter of the final apertures on the repeller is 8.8 mm.

Source and acceleration system are connected to a vacuum vessel with several **BEAM DIAGNOSTICS :**
Beam Emission Spectroscopy (BES) **IR thermography on CFC tile calorimeter** **1D&2D CCD cameras** **…and many others…**

BEAM EMISSION SPECTROSCOPY

collects the H_α light produced by the beam along a line of sight (LOS), and analyzes its spectrum [3]. It allows to measure:
| **Beam divergence** | **Beam intensity (rel. variations)** | **Beam direction** | **Fraction of stripping losses (rel. variations)** |

View of Line of Sight

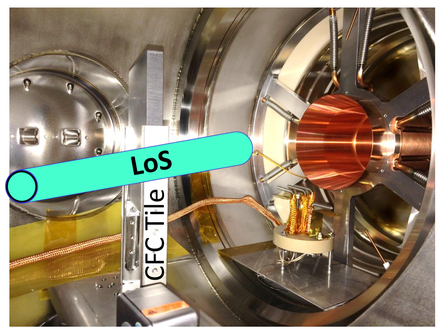

Spectrometer & CCD camera

HARDWARE

Optical fiber: 10 m long, 400 µm core diameter

Optic Head: collects Hα emitted by beamlets.
Lens: f=50 mm CA=6 mm Ø

LoS

Spectrometer: separates Doppler shifted Hα emissions.
Model: P.I. Isoplane SCT 320 [4]
f=320 mm, grating: 2000 gr/mm
Entrance slit width: 50 µm
Plate factor @ Hα: 12.9 pm/pixel.

CCD camera
Model: P.I. Pixis 2k/BUV[4]
Pixel dim.:13.5 µm
Typ. Exposure time: 8 s

Theory

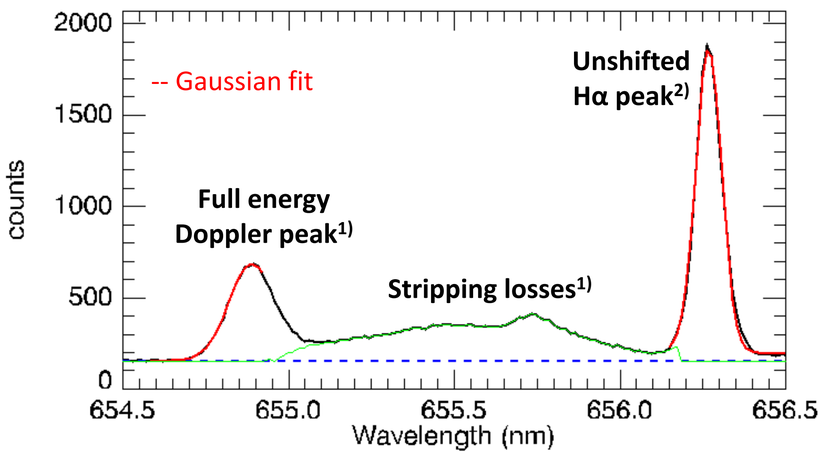

RF power: 1,2 kW, source pressure 1,1 Pa, extraction voltage: 1,3kV, total acceleration voltage: 8kV, accelerated beam current: ~2 mA

1) The collisions with the background gas excite the fast particles to the *n=3* level. The energy of the interaction is so low that in practice the direction of the fast particle is unchanged.

$$H^{0/-}_{fast} + H_2 \rightarrow H^{\circ *}_{fast} + H_2\ (+e) \rightarrow H_{fast} + H_2 + \gamma_{(n=3\rightarrow 2)}\ (+e)$$

2) The atoms of the background gas could get excited and emit too, but the slow motion of these particles doesn't affect the wavelength of the observed radiation.

$$H^{0/-}_{fast} + H_2 \rightarrow H^{\circ}_{fast} + H + H^*\ (+e) \rightarrow H_{fast} + 2H + \gamma_{(n=3\rightarrow 2)}\ (+e)$$

Properties of the spectrum	Measurable physical quantities
Doppler shift	aiming of the beamlets (from α)
Integral of full energy Doppler peak	density of the beamlets (line-integrated) → non uniformities in the beam
Ratio of integrals, stripping losses over f.e. Doppler peak	Fraction of stripping losses (but weighting of integrals with emission cross sections and beam ionic composition is necessary)
Broadening of the shifted peak	divergence ε of the beamlets

Doppler shift formula

$$\lambda' = \lambda_{H_\alpha} \frac{1-\beta\cos\alpha}{\sqrt{1-\beta^2}}$$

$$\alpha = \arccos\left[\frac{1}{\beta}\left(1-\frac{\lambda'}{\lambda_{H_\alpha}}\sqrt{1-\beta^2}\right)\right]$$

λ':Doppler shifted wav. $\lambda_{H\alpha}$ = 656.28 nm β= v/c ≈ 10^{-2}
α: angle between beam particles and emitted photons

$$\varepsilon = \frac{\sqrt{1-\beta^2}}{\beta\lambda_{H\alpha}\sin\alpha}\sqrt{\Delta\lambda^2 - \Delta\lambda_N^2 - \Delta\lambda_I^2 - \left(\frac{\beta\lambda_{H\alpha}\sin\alpha}{\sqrt{1-\beta^2}}\right)^2\omega^2 - \left(\frac{e\lambda_{H\alpha}}{mc^2\beta}(\beta-\cos\alpha)\right)^2\upsilon^2} \quad [5]$$

Δλ=f.e. Doppler peak width $\Delta\lambda_I$=13,2 pm Hα instrinsic width
$\Delta\lambda_N$=39,2±0,1 pm instrumental function's e-folding width
ω=8,67 mrad ±10% observation angle of collection optics
m: H^- mass v=HVx(0,2%±0,02%) high voltage ripple

First results

Source pressure scan

RF power: 1.2 kW, extraction voltage: 1.3kV, total acceleration voltage: 8kV

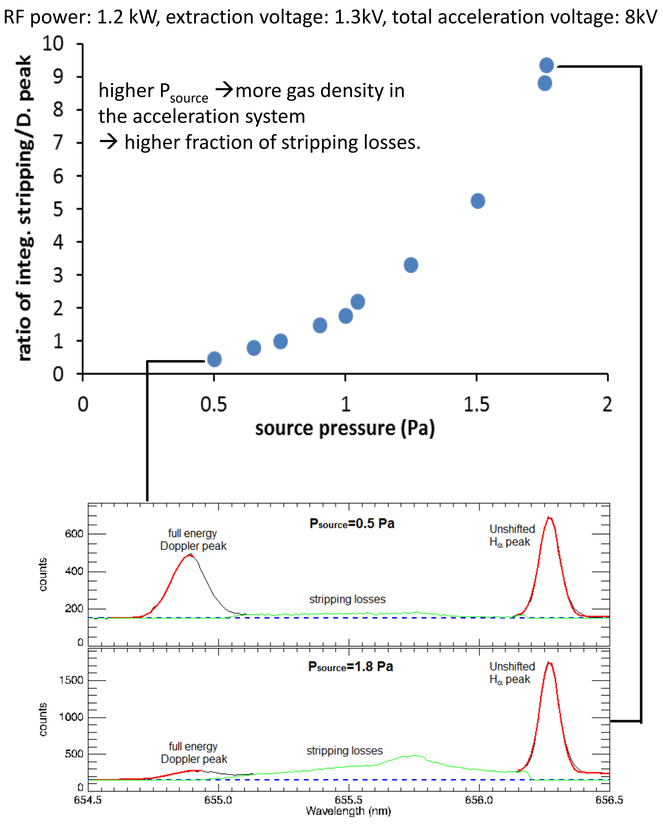

Extraction voltage scan

RF power: 1.2 kW, source pressure 1 Pa, total acceleration voltage: 8kV

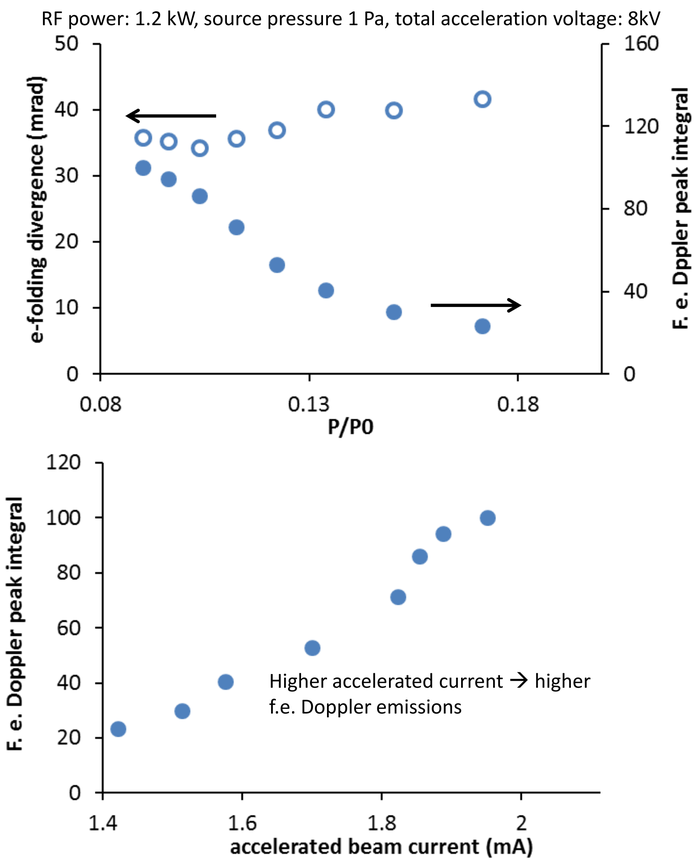

Extraction voltage scans

RF power: 1.2 kW, extraction voltage 1.3 kV

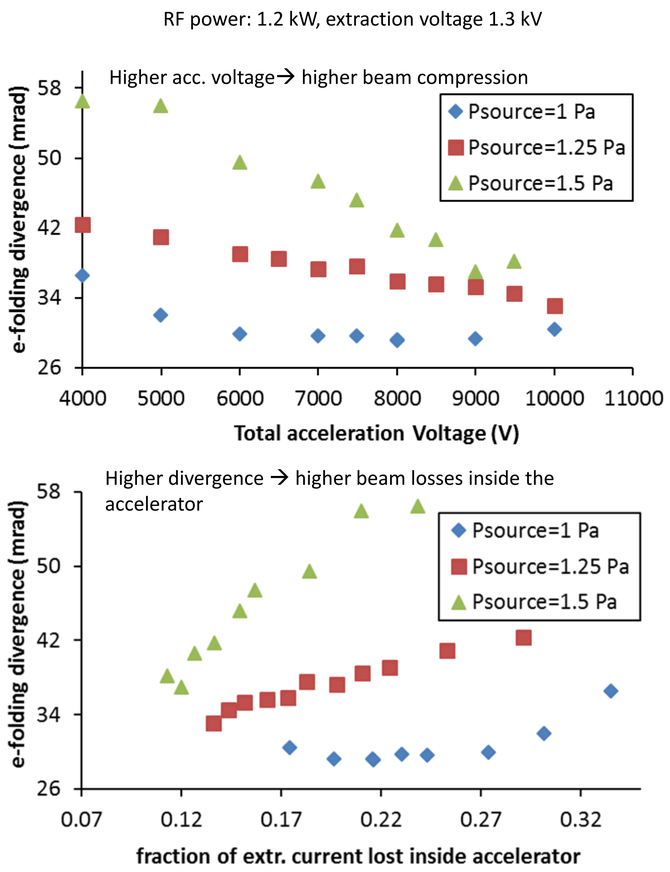

Conclusions & references

The BES diagnostic has been successfully installed in the NIO1 experiment and is routinely working during NIO1 experimental campaigns. Beam divergence, beam horizontal aiming and relative variations of beam intensity and stripping fraction can be measured. As preliminary check, known relations between the BES results and the operational parameters have been successfully verified. In future, the results of BES diagnostic will be validated by comparing them with the output of the other beam diagnostics. Simulations of the beam will be also carried out in order to better interpret the BES and the accelerator's electric measurements with which they are usually correlated.

1. M. Cavenago, et al., AIP Conf. Proc. 1515, 157 (2013).
2. M. Cavenago et al., AIP Conf. Proc. 1655, 040006 (2015)
3. M. Barbisan et al., Rev. Sci. Instrum. 85, 02A708 (2014).
4. Princeton Instruments website: http://www.princetoninstruments.com.
5. B. Zaniol., J. Quant. Spectrosc. Radiat. Transfer 112,513-518 (2011).

Horizon 2020
European Union Funding
for Research & Innovation

This work has been carried out within the framework of the EUROfusion Consortium and has received funding from the Euratom research and training programme 2014-2018 under grant agreement N°633053. The views and opinions expressed herein do not necessarily reflect those of the European Commission.